7kW/22kW AC EV Charger

OPERATION INSTRUCTION

CNC Deliver Power For Better Life

⚠ Before installing and using this product, please read this manual carefully and pay more attention to safety.

1. General

and intelligent charging equipment and charging solutions.

This product is the 7 kW/22 kW AC EV Charger (hereinafter referred to as the charger). The charger consists of the main AC charger body, hangingplate and other parts. Charging can be started by card swiping. It is equipped with complete charging protection functions and reaches IP55 overall protection rating, suitable for indoor and outdoor scenarios to ensure product safety and reliability for worryfree charging.

The product features easy installation and simple charging operation, wellintegrated interactive indicator lights, multiple builtin safety protections such as overvoltage and overcurrent protection, and IP55 protection rating to resist various harsh environments, providing safe, stable, efficient and convenient charging service for electric vehicles.

Parameter Name	Description			
Product Model	YCE1T2132	YCE1T2232	YCE1T2332	YCE1T2432
AC Power Supply	1P+N+PE (Singlephase)		3P+N+PE (Threephase)	
Power Supply Voltage	AC230V~±10%		AC400V~±10%	
Rated Current	32A			
Power	7Kw		22Kw	
Frequency	5060Hz			
Mode	Cable with gun	Socket	Cable with gun	Socket
Cable Length	5m	/	5m	/
Ingress Protection Rating	IP55			
Operating Temperature	-40°C~45°C			
Cooling Method	Natural Cooling			
Color	Silverwhite / Black			
Tuya WiFi	Standard			
Emergency Stop Button	Standard			
DLB (Dynamic Load Balancing)	Not equipped by default (optional)			
Pedestal	Not equipped by default (optional)			
Dual Charging Plug	/	Not equipped by default (optional)	/	Not equipped by default (optional)
Installation Method	Wallmounted / Pedestalmounted (pedestal needs to be selected additionally)			

2. Card-Swipe Start Instructions (Card-Swipe Version Only)

1. Insert the charging gun into the vehicleside charging socket, ensure a secure connection between the charging gun and the vehicle. The green indicator light stays steadily on.
2. Hold an authorized user card close to the cardswipe panel. When the buzzer beeps and the indicator switches to charging status, the charger starts charging successfully.
3. To stop charging while the charger is in charging status:

    3.1. Hold an authorized user card close to the cardswipe panel. When the buzzer beeps and the indicator switches to guninserted status, the charger stops charging.

    3.2. Open the vehicle infotainment panel and tap to stop charging.

3. Tuya App Instructions

1. Insert charging gun into vehicleside charging socket, ensure reliable connection between charging gun and vehicle; blue indicator stays steadyon.
2. You can connect charger Bluetooth via Tuya App, set charging mode on personal charger page, configure parameters, grounddetection switch and other options on setting page. (See miniprogram operation instructions for details.)
3. You can also connect charger Bluetooth via Tuya App to directly control the charger for starting and stopping charging.

4. Add Charger via Tuya App

Note: Keep the charger poweredon under standby status!

1.Open the “Tuya” App, tap “Add” on homepage or tap plus icon on homepage and select “Add Device”, enter device search page and wait for the charger to be searched.



2.When the charger is found, tap it. Select available WiFi connection, input WiFi password and tap “Next”. Wait until device adding completes and tap Done to exit.



5. Safety and Warnings



1.The charger shall be kept away from explosiveprone or flammable materials, chemicals, steam and other dangerous articles.



2.Keep the charger clean and dry. If contaminated, wipe with clean dry cloth.



3.Do not use the charger if any obvious damage occurs such as cracks, abrasion, exposed conductors or other evident defects; contact professional technicians immediately.



4.Do not attempt to disassemble, repair or reinstall the charger. Contact professional technicians if necessary. Improper operation will cause device damage, electric leakage and other hazards.



5.Cut off power supply immediately in case of any abnormal condition.



6.Do not use the charger outdoors during thunderstorm.



7.Keep children away from charger during charging.



8.Charge the electric vehicle only when it keeps static. For hybrid vehicles, charge with engine turned off.



9.Pay attention to electricity safety during charging.

6. Charging Operation Instructions

Charging Precharging Inspection

Inspection Sequence	Inspection Content
1	Check whether charger appearance is intact and charging gun tip free of damage
2	Confirm whether charging environment is safe
3	Observe LED indicator statusNormal stand-by: steady blue lightDevice fault: flashing red light

Indicator Light Definition

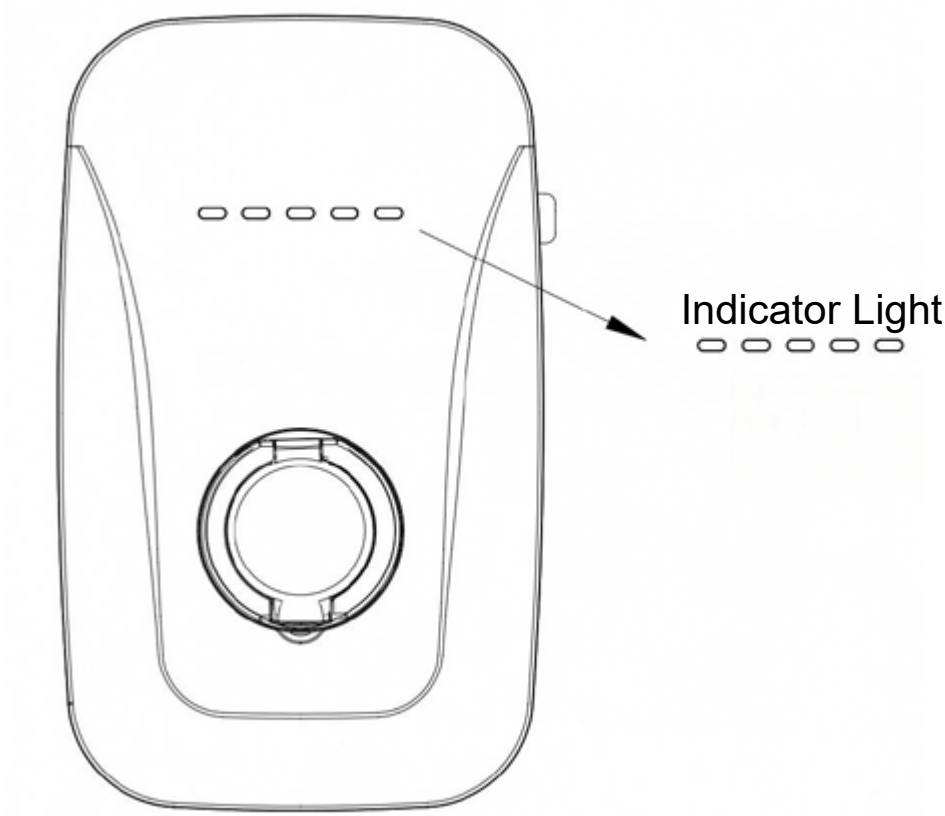

Light Definition	Light Color	Light Color	Display Status	Light Description
Standby		Blue	Steady ON	Device powered on, no charging gun inserted
Gun Insert-ed		Green	Steady ON	Charging gun connected
Charging		Green	Flash-ing	Charging in normal progress
Scheduled Charging		Green	Steady ON	Scheduled standby
Fault		Red	Flash-ing	Leakage fault
Fault		Red	Flash-ing	CP (Control Pilot) signal fault
Fault		Red	Flash-ing	Over / Undervoltage fault
Fault		Red	Flash-ing	Overcurrent fault
Fault		Red	Flash-ing	Ground fault
Emergency Stop		Red	Flash-ing	Emergencystop but-ton pressed down
Fault		Red	Flash-ing	Overtemperature fault

Note: When fault light is on, restart device and observe status again. If fault light is still on, please call customer service: (0086-577-61989999).

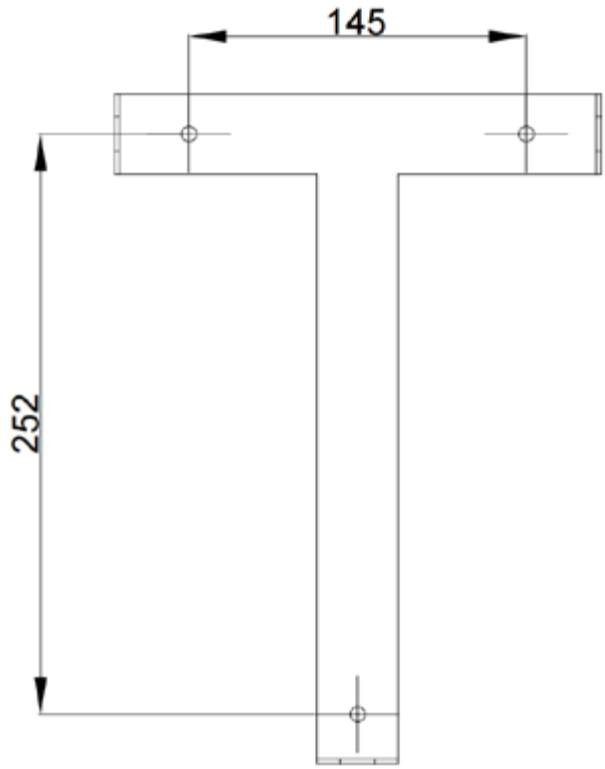

Wall Drilling Dimension Diagram (Unit: mm)

Main Unit of
AC EV Charger

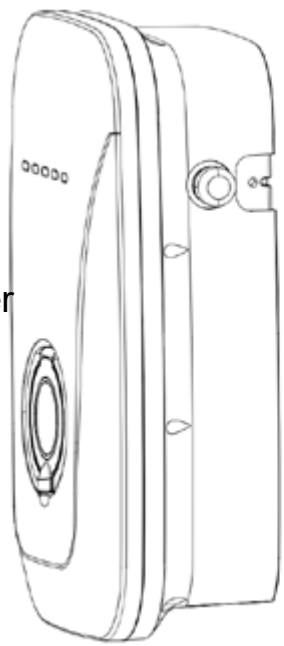

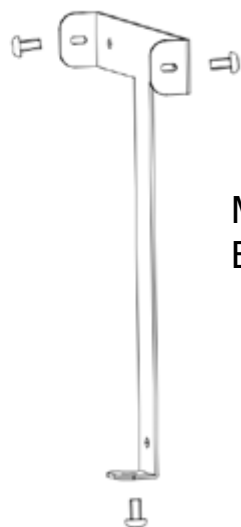

Mounting
Backplate

MainUnit Installation Schematic Diagram

7. Packing List

Name	Quantity
Main unit of AC EV Charger	1 unit
IC StartStop Card	2 pieces
Mounting Fixing Plate	1 piece
Screw & Expansion Tube Kit	1 set (3×TS3.9 screws + 3×Φ6 expansion tubes)
AC Dualgun Charging Cable	1 piece (optional for socket version)

8. Wallmount Installation Instructions

1.Positioning

Remove hangingplate, attach it against wall to confirm installation position. It is recommended that the bottom shall be no less than 1.2 m above ground. Positioning principle: mounting surface shall be flat; otherwise hangingplate may deform and lead to mounting failure.

2.Install wallmount hangingplate

After positioning, drill 3 holes on wall according to dimension drawing.

Drill hole diameter φ6 mm, hole depth ≥30 mm.

Knock 3 expansion tubes from accessory bag into drilled holes, place metal fixing plate over holes and fasten tightly with 3 screws.

9. Pedestalmount Installation Instructions

1.Cable threading

Input cable enters from pedestal bottom opening and comes out from central large hole for wiring.

2.Pedestal installation

Drill holes on preembedded ground according to pedestal base mounting hole dimension, knock in matching expansion bolts and fasten.

3.Charger body installation

Align mounting backplate and gun holder to reserved holes on pedestal and fasten with bolts. Remaining component installation follows wallmount installation procedure.

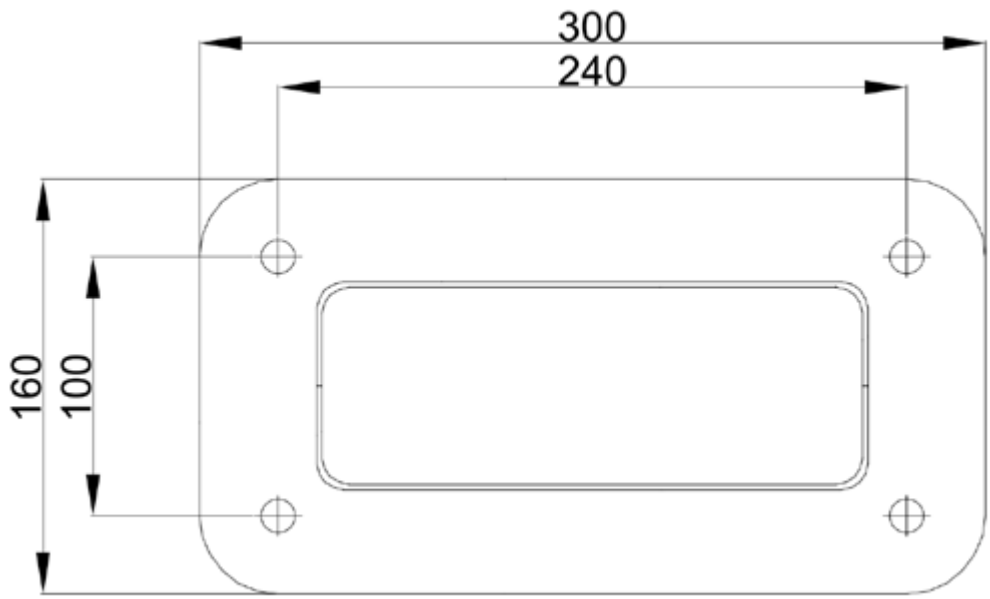

10. User Notice

Dear User:

Thank you for selecting products of CNC Electric Group Co., Ltd. You can visit www.cncele.com for more product and technical updates.

Usage & Deployment Instructions

To ensure safe and efficient operation of the product, please read this manual carefully, and install and maintain your equipment in accordance with the instructions.

Risk Notification

For safe operation of products from CNC Electric Group Co., Ltd., please read the following risk notification carefully:

This product is powerrelated equipment. Please review the operationmaintenance risk notification and usage risk notification specified in the user manual before use.

Do not disassemble the unit or modify the wiring on your own. Failures caused by unauthorized disassembly or wiring modification shall not be covered under the warranty of CNC Electric Group Co., Ltd. CNC Electric Group Co., Ltd. shall assume no liability for any personal injury resulting therefrom.

Aftersales Service

Due to product upgrade, the purchased product may be partially inconsistent with descriptions in this manual. We apologize for this.

CNC Electric Group Co., Ltd. provides fullcycle premium service for you. Please call customer service hotline 0086-577-61989999 whenever you encounter any problem.

OperationMaintenance Risk Notice

Do not disassemble or modify charging facilities and wiring without permission, otherwise fire or electricshock accident may occur; in case of fault poweroff, contact service staff or dial customer service 057762927777.

Do not perform maintenance for charging device while power is connected; electricshock risk exists.

Usage Risk Notice

Confirm parameter matching between electric vehicle and charger before use, otherwise vehicle damage may be caused.

It is strictly forbidden to use charger under faulty status; do not take arbitrary actions under abnormal charging conditions.

Operate strictly per charger operation instructions and prompts; otherwise electricshock and fire risks exist.

In case of fire, charger waterimmersion and other accidents, keep away from charger and notify personnel familiar with charger and emergency disposal for handling.

It is strictly forbidden to open, wire, modify or damage charger without authorization; electricshock risk exists.

Guardians shall supervise children around charger to avoid electricshock accidents.

Warranty Statement

Our company guarantees each device has passed strict quality inspection. Qualitycaused failures under normal usage within warranty period shall get warranty service.

Damage caused by improper transportation & installation,

incorrect use & maintenance, negligence or natural disasters shall be excluded from warranty scope.

Disclaimer

Please read this product manual carefully before using this device and operate strictly in accordance with operation instructions and safety warnings.

Putting this device into service shall be deemed that you have read, understood, acknowledged and accepted all terms and contents of this product manual.

During usage of this device, you must strictly comply with requirements specified in risk notices, safety warnings, installation instructions and charging operation instructions. Our company shall not bear any liability for all personal injuries, accidents, property losses, legal disputes and other adverse events arising from operations violating manual prompts.

If you have any questions on above items, please call customer service hotline: 0086-577-61989999.

CNC
ELECTRIC

CERTIFICATE

Product Model: 7kW/22kW AC EV Charger

Inspector: CNC 001

Production date: Printed on the product or package.

This product is qualified according to the delivery inspection

CNC ELECTRIC

Tel:0086-577-61989999 Fax:0086-577-61891122

www.cncele.com E-mail: cncele@cncele.com