Solar Energy

YCE1 AC EV Charger





General

With exquisite appearance,its hand-held design is in line with principles of ergonomics,easy to plug in and pull out.It conforms to IEC61851-1 standard.

Black and silver-white available.

The traditional PCBA solution offers Tuya Wi-Fi..

Type designation

YCE1-T2-132
YCE1-T2-232
YCE1-T2-332
YCE1-T2-432

Company Code	Product Series	Product Standard	Power Supply	Current (A)
YC	E1	T1	1	16
Company Code	E1-E2-E3… Charger Series	T1:American Standard T2:European Standard	1:Single-phase 2:Single-phase Socket 3:Three-phase 4:Three-phaseSocket	16A 32A

Solar Energy

YCE1 AC EV Charger

Technical data

Product Model	YCE1-T2-132	YCE1-T2-232	YCE1-T2-332	YCE1-T2-432
AC Power Supply	1P+N+PE (Single-phase)		3P+N+PE (Three-phase)	
Supply Voltage	AC230~±10%		AC400~±10%	
Rated Current	32A			
Power / Rated Power	7kW		22kW	
Frequency	50-60Hz			
Mode	Charging Cable	Charging Socket	Charging Cable	Charging Socket
Cable Length	5m	/	5m	/
Ingress Protection Rating / IP Rating	IP55			
Operating Temperature	-40°C~45°C			
Cooling Method	Natural Cooling			
Colour	Silver-white / Black			
Tuya Wi-Fi	Standard			
Emergency Stop Button	Standard			
DLB (Dynamic Load Balancing)	Not included as standard (Optional)			
Pole / Pedestal	Not included as standard (Optional)			
Dual Charging Plug	Not included as standard (Optional)			
Installation Method	Wall-mounted / Pedestal-mounted (Pedestal to be ordered optionally)			

Overall and mounting dimensions(mm)

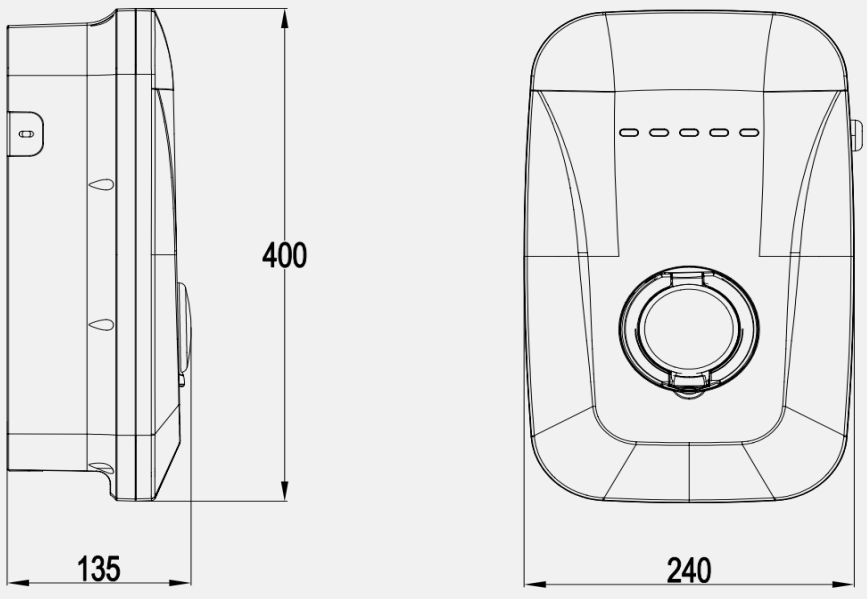

Solar Energy

YCE2 AC EV Charger



General

Designed for commercial use.

Multi-language support available upon request, with free online software updates.

Built-in DIN rail controller and Type B RCCB provide enhanced safety and stability compared to the traditional PCBA solution.

Type A RCD + RCMU solution also available upon request.

Ultra-low noise charging solution available upon request.

Type designation

YCE2-T2-132
YCE2-T2-232
YCE2-T2-332
YCE2-T2-432

Company Code	Product Series	Product Standard	Power Supply	Current (A)
YC	E2	T1	1	16
Company Code	E1-E2-E3… Charger Series	T1:American Standard T2:European Standard	1:Single-phase 2:Single-phase Socket 3:Three-phase 4:Three-phaseSocket	16A 32A

Solar Energy

YCE1 AC EV Charger

Technical data

Product Model	YCE2-T2-132	YCE2-T2-232	YCE2-T2-332	YCE2-T2-432
AC Power Supply	1P+N+PE(Single-phase)		3P+N+PE(Three-phase)	
Supply Voltage	AC230~±10%		AC400~±10%	
Rated Current	32A			
Power	7kW		22kW	
Frequency	50-60Hz			
Mode	Charging Cable	Charging Socket	Charging Cable	Charging Socket
Cable Length	5m	/	5m	/
IP Rating	IP54			
Operating Temperature	-40°C~45°C			
Cooling Method	Natural Cooling			
Display Screen	5-inch LCD			
Wi-Fi / Ethernet	Standard			
Data Protocol	OCPP 1.6J			
DLB (Dynamic Load Balancing)	Not included as standard (Optional)			
Emergency Stop Button	Standard			
Indicator Light	Standby (solid blue), Charging (flashing green), Fault (solid red)			
Pedestal	Not included as standard (Optional)			
Dual Charging Connector	/	Not included as standard (Optional)	/	Not included as standard (Optional)
Installation Method	Wall-mounted / Pedestal-mounted (Pedestal to be ordered optionally)			

Solar Energy

YCES1 AC Dual-port EV Charging Cable



General

Featuring a simple and sleek design with a comfortable grip for safe operation.

The charging plug strictly complies with IEC 62196-2, ensuring reliable quality.

Equipped with a dedicated charging cable, supporting Mode 3 charging and widely compatible with various new energy vehicle models.

Type designation

YCES1-M2F2-316
YCES1-M2F2-132
YCES1-M2F2-332

Company Code	Product Series	Product Standard	Product Standard	Power Supply	Current (A)
YC	ES1	M1	F1		16
Company Code	ES1-ES2-ES3..... Charger Series	M1:EVSE-end US Standard M2:EVSE-end European Standard	F1:Vehicle-end US Standard F2:Vehicle-end European Standard	1:Single-phase 3:Three-phase	16A 32A

Solar Energy

YCES1 AC Dual-port EV Charging Cable

Technical data

	Electrical Parameters		
Rated Current	16A/32A		
Rated Voltage	240V/415V		
Insulation Resistance	>1000MΩ, DC(500V)		
Withstand Voltage	2000V		
Contact Resistance	0.5MΩ MAX		
Mechanical Performance			
Insertion / Withdrawal Cycles	>10,000 cycles		
Coupling Insertion / Withdrawal Force	<100 N (P) / <75 N (V)		
Impact Resistance	Withstands 1 m drop and 2-ton vehicle rollover		
Environmental Conditions			
Operating Ambient Temperature	–30 °C to +50 °C		
Main Materials			
Housing Material	PA66, UL 94 V-0		
Pin Material	H62, Silver-plated		
Model and Standard			
Model	Rated Current	Cable Specification	Standard
YCS1-M2F2-316	16 A	5×2.5mm²+2×0.5mm²	European Standard
YCS1-M2F2-132	32 A	3×6mm²+2×0.5mm²	
YCS1-M2F2-332	32 A	5×6mm²+2×0.5mm²	

Solar Energy

YCP1 Portable Charging Gun



General

This portable charging gun is designed in accordance with IEC/EN 62752 and IEC/EN 61851-1 standards, is CE marked, and is suitable for home, vehicle, and outdoor charging scenarios in the EU.

The control box features IP 66 dust and water resistance, withstanding harsh outdoor environments; the entire unit meets UL 94 V-0 flame retardancy requirements, effectively preventing fire risks.

Equipped with six-layer safety protection (CP abnormality / overcurrent / overvoltage / undervoltage / leakage / overtemperature), it provides real-time monitoring and automatic power-off in case of faults, ensuring safety throughout the charging process.

Portable, universal, compliant, and stable, it is compatible with mainstream new energy vehicle models in the EU, serving as a dedicated, safe charging device for home and outdoor use.

Type designation

YCP1-EP-116-T2
YCP1-EP-132-T2

Company Code	Product Series	Product Standard	Power Supply	Current (A)	Product Standard
YC	P1	EP	1	32	T2
Company Code	P1,P2,P3..... Portable EV Charger Series	Portable Charging Gun	1:Single-phase 3:Three-phase	16A 32A	T1:US Standard Plug T2:European Standard Plug

Solar Energy

YCP1 Portable Charging Gun

Technical data

	Electrical Parameters	
Model	YCP1-EP-116-T2	YCP1-EP-132-T2
Rated Current	16 A	32 A
Rated Input Voltage	220 V AC	
Rated Output Voltage	220 V AC	
Standby Power Consumption	<3 W	
Insulation Resistance	>10 MΩ	
Dielectric Strength	2000 V AC / 1 min / ≤10 mA	
Withstands 1 m drop and 2-ton vehicle rollover	±2.0 kV	
Mechanical Performance		
Service Life	>10,000 cycles	—
Environmental Conditions		
Operating Temperature / Humidity	–30 °C to +50 °C / 5% to 95%	—
Storage Temperature	–40 °C to +80 °C	—
Operating Altitude	<2000 m	—
Protection Rating / Safety Functions		
Protection Rating	IP 66 (Control Box)	—
Flame Retardancy	UL 94 V-0	—
Safety Protections	CP abnormality, overcurrent, overvoltage, undervoltage, leakage, overtemperature	