# Power supply

## AC Voltage Stabilizer



Page F02

**SBW**

High Power Compensation
Single, Three Phase
Voltage Stabilizer



Page F03

**SVC**

Single-phase
Voltage Stabilizer



Page F04

**SVC**

Three-phase
Voltage Stabilizer



Page F05

**AVR**

Household Voltage
Stabilizer (Relay type)



Page F06

**TSD**

Hanging-style
Voltage Stabilizer

## AC Voltage Regulator



Page F07

**TDGC2, TDGC2J**
**TSGC2, TSGC2J**

## Control Transformer

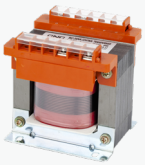

Page F09

**BK2**

Control Transformer



Page F11

**JBK3**

Control Transformer



Page F12

**JBK5**

Control Transformer



Page F14

**SG**

Three-phase dry type
transformer



Page F16

**SBK**

Low Voltage Three-phase Dry
Protection Transformer

# Power supply

## Switching Power Supply



Page F21

**LRS-35**



Page F22

**LRS-50**



Page F23

**LRS-60**



Page F24

**LRS-75**



Page F25

**LRS-100**



Page F26

**LRS-120**



Page F27

**LRS-150**



Page F28

**LRS-200**



Page F29

**LRS-250**



Page F30

**LRS-350**



Page F31

**LRS-400**



Page F32

**MSF-10W, MSF-20W**



Page F33

**MS-15W, S-15W**

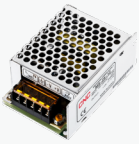

Page F34

**MS-25W, S-25W**



Page F35

**MS-35W, S-35W**



Page F36

**MS-50W, S-50W**



Page F37

**MS-60W, S-60W**



Page F38

**S-75W, MS-100W**



Page F39

**S-100W, S-120W**



Page F40

**S-145W, MS-150W**



Page F41

**S-150W, S-200W**



Page F42

**S-201W, S-250W**



Page F43

**S-350W**



Page F44

**S-400W, S-500W**



Page F45

**S-600W, DR-30W**



Page F46

**DR-45W, DR-60W**



Page F47

**DR-75W, DR-120W**

# Power supply

## Inverter



Page F49
**YCP**
Series Pure Sine Wave Inverter



Page F51
**YCM**
Modified Sine Wave Inverter

## Current transformer



Page F52
**MSQ**

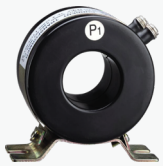

Page F55
**RCT**



Page F57
**YCP**

## Self-healing shunt capacitor



Page F60
**BSMJ**



Page F64
**BGMJ**

## Intelligent Capacitor



Page F67
**YCZN**

## Composite Switch



Page F73
**YCFK**

## Reactive power auto-compensation controller



Page F762
**JKW5C**



Page F77
**JKW-32**



Page F78
**JKW7C**

# Power Supply


















CNC
ELECTRIC

# SBW High Power Compensation Single, Three Phase Voltage Stabilizer




## General

SBW three phases AC voltage stabilizer is a high power adjustable automatic voltage compensation regulating power device. When voltage from support network is varied due to loading current influence, it automatically regulates the output voltage to ensure the normal function of the electric equipments. Compared with other types of voltage stabilizer, this series product has large capacity, high efficiency, no waveform distortion, stable voltage regulation and other advantages. It supports wide load application, instantaneous overload and continuous long work, manual/auto switch, can also provide over voltage, lack phase, phase order and machine faulty automatic protection.

Convenient assemble and reliable operating (can be digital display/analog display).

## Technical data

| Input voltage | Single phase: 175V-265V Three phases: 300V-456V |
|---|---|
| Output voltage | Single phase: 220V Three phases: 380V |
| Output deviance | 1-5% Adjustable |
| Frequency | 50Hz~60Hz |
| Efficiency | ≥95% |
| Response time | ≤1.5S |
| Ambient temperature | -10°C~+40°C |
| Insulation resistance | ≥5MΩ |
| Overload | Double rated current, one min |
| Waveform distortion | Non-lack fidelity waveform |
| Protection | Overvoltage, Overcurrent, Lack phases |




## Ordering information

| Model | Output Power(kVA) | Outline(cm) | Weight(kg) |
|---|---|---|---|
| SBW-50K | 50 | 80×54×135 | 250 |
| SBW-60K | 60 | 80×54×135 | 255 |
| SBW-100K | 100 | 85×62×150 | 357 |
| SBW-150K | 150 | 100×70×165 | 482 |
| SBW-180K | 180 | 100×70×165 | 515 |
| SBW-200K | 200 | 100×70×165 | 562 |
| SBW-225K | 225 | 110×80×185 | 670 |
| SBW-250K | 250 | 110×80×185 | 710 |
| SBW-300K | 300 | 110×80×195 | 755 |
| SBW-320K | 320 | 110×80×195 | 810 |
| SBW-400K | 400 | 100×80×200 Double cabinets | 1175 |
| SBW-500K | 500 | 100×80×200 Double cabinets | 1510 |
| SBW-600K | 600 | 100×80×200 Double cabinets | 1790 |

# SVC Single-phase Voltage Stabilizer




## General

SVC series full-automatic voltage regulator consist of contact autotransformer, servomotor, automatic control circuit etc. When grid voltage or load is changed, automatic sampling control circuit sends a signal to the drive servomotor, to adjust the position of the self coupling voltage regulator for carbon brush, so that the output voltage rating can reach the stable state.

This product has the waveform distortionless, reliable performance, long-term operation and other characteristics, such as time delay, over voltage, undervoltage protection. It can be widely used in electricity where stable voltage is needed, it is an ideal voltage stabilized supply to ensure the normal operation of electrical equipment.




## Technical data

| Input voltage | 150V-250V |
|---|---|
| Output voltage | 220V |
| Output deviance | ±3% |
| Frequency | 50Hz~60Hz |
| Efficiency | ≥90% |
| Response time | ≤1S |
| Ambient temperature | -10°C~+40°C |
| Insulation resistance | ≥5MΩ |
| Waveform distortion | Non-lack fidelity waveform |
| Protection | Overvoltage, Overcurrent |

F




## Ordering information

| Model | Weight(kg) | Outline(cm) | QTY |
|---|---|---|---|
| SVC-500VA | 4 | 19×16×14 | 4 |
| SVC-1000VA | 5.5 | 21×19×17 | 4 |
| SVC-1500VA | 5.8 | 21×19×17 | 4 |
| SVC-2000VA | 10 | 29×24×20 | 2 |
| SVC-3000VA | 12 | 29×24×25 | 2 |
| SVC-5000VA | 15 | 36×22×29 | 2 |
| SVC-7000VA | 16.5 | 36×22×29 | 2 |
| SVC-10000VA | 27 | 42×24×36 | 1 |
| SVC-15000VA | 64 | 42×38×76 | 1 |
| SVC-20000VA | 70 | 42×38×76 | 1 |
| SVC-30000VA | 95 | 45×43×87 | 1 |
| SVC-5000VA(vertical) | 17 | 32×28×46 | 1 |
| SVC-10000VA(vertical) | 36 | 36×28×51 | 1 |

# SVC Three-phase Voltage Stabilizer




## General

SVC series three phases high precision automatic voltage stabilizer is combined with SVC single phase high precision automatic voltage stabilizer. Three phases adjust individually to guarantee steady safe voltage in per phase. The incoming power of network is three phases four wires system, starlike (Y) connection, the output power can be made in three phases four wires or three phases three wires, three ampere meters indicate the output current per phase, testing the outline voltage of per phase by a switch & a voltage meter shift.

## Technical data

| Input voltage | 280V-430V |
|---|---|
| Output voltage | 380V |
| Output deviance | ±3% |
| Frequency | 50Hz~60Hz |
| Efficiency | ≥90% |
| Response time | ≤1S |
| Ambient temperature | -10°C~+40°C |
| Insulation resistance | ≥5MΩ |
| Waveform distortion | Non-lack fidelity waveform |
| Protection | Overvoltage, Overcurrent |

F

## Ordering information

| Model | Rated capacity(kVA) | Weight(kg) | Outline(cm) |
|---|---|---|---|
| SVC-1.5K | 1.5 | 20 | 48.5×22.5×17 |
| SVC-3K | 3 | 24 | 48.5×22.5×17 |
| SVC-4.5K | 4.5 | 28 | 48.5×22.5×17 |
| SVC-6K | 6 | 34 | 36×28×68 |
| SVC-9K | 9 | 43 | 38×32×78 |
| SVC-15K | 15 | 68 | 52×40×86 |
| SVC-20K | 20 | 85 | 49×46×97 |
| SVC-30K | 30 | 91 | 64×57×118 |
| SVC-40K | 40 | 175 | 64×57×118 |
| SVC-50K | 50 | 185 | 64×57×118 |
| SVC-60K | 60 | 196 | 64×57×118 |
| SVC-80K | 80 | 233 | 67×55×132 |
| SVC-100K | 100 | 257 | 81×70×147 |

# AVR Household Voltage Stabilizer (Relay Type)




## General

AVR voltage regulator is a power supply circuit or equipment that can automatically adjust the output voltage.

## Type designation

AVR - 500VA In:150V-250V Out:220V±3%

- Out:220V,Out:380V
- In:140V-260V,In:150V-250V
  In:270V-430V,In:295V-455V
- Power:
  500VA=500VA,1000VA=1000VA
  1500VA=1500VA,2000VA=2000VA
  3000VA=3000VA,5000VA=5000VA
  8000VA=8000VA,10000VA=10000VA
- Model

## Operating condition

1. Ambient temperature: 0~+40°C
2. Relative humidity: ≤20% at 40°C; ≤90% at 20°C
3. Altitude: ≤2000m
4. Environmental conditions: no harmful gases and vapors, no conductive or explosive dust, no severe mechanical vibration

F

## Technical data

| Input voltage | | AVR-500VA | AVR-1000VA | AVR-1500VA | AVR-2000VA | AVR-3000VA | AVR-5000VA | AVR-8000VA | AVR-10kVA |
|---|---|---|---|---|---|---|---|---|---|
| Output voltage | | 500VA | 1000VA | 1500VA | 2000VA | 3000VA | 5000VA | 8000VA | 10kVA |
| Input | Input voltage range | AC150-250V | | | | | | | |
| | Input frequency | 50-60Hz | | | | | | | |
| Output | Output voltage | 220V AC | | | | | | | |
| | Output precision | ±10% | | | | | | | |
| Efficiency | | 95% | | | | | | | |
| Phase | | Single phase | | | | | | | |
| Meter display status | | Input voltage/Out put voltage | | | | | | | |
| LED display Status | Working | GREEN, Indicating power ON/OFF | | | | | | | |
| | Delaying | YELLOW, Indicating DELAY ON/OFF | | | | | | | |
| | Over-v | RED, Indicating if the machine is working regularly | | | | | | | |

## Overall and mounting dimensions(mm)

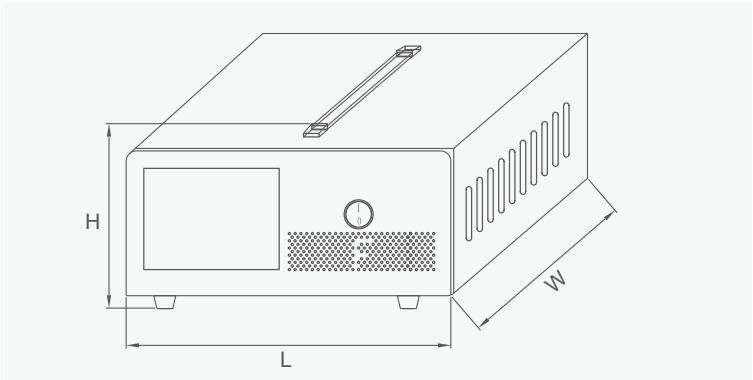


| Model | External Dimensions (mm) | | |
|---|---|---|---|
| | Length (L) | Width (W) | Height (H) |
| AVR-500VA | 230 | 225 | 115 |
| AVR-1000VA | 230 | 225 | 115 |
| AVR-1500VA | 230 | 225 | 115 |
| AVR-2000VA | 230 | 225 | 115 |
| AVR-3000VA | 235 | 315 | 235 |
| AVR-5000VA | 235 | 315 | 235 |
| AVR-8000VA | 270 | 400 | 325 |
| AVR-10kVA | 270 | 400 | 325 |

# TSD Hanging-style Voltage Stabilizer




## General

TSD series servo type hanging automatic ac voltage stabilizer is a new and perfect design on the base of the SVC series products. It has excellent functions like over voltage, under voltage protection, main protection and steady voltage automatic shift, the hanging type installation can effectively use the space, as well as smooth appearance and color, can give users a fresh feeling. It can be widely used in most situations like home, hospital, office and where the voltage stability is required.

## Technical data

| Input voltage | 150V-250V |
|---|---|
| Output voltage | 220V |
| Output deviance | ±3% |
| Frequency | 50Hz~60Hz |
| Efficiency | ≥90% |
| Response time | <1S |
| Ambient temperature | -10°C~+40°C |
| Insulation resistance | ≥5MΩ |
| Waveform distortion | Non-lack fidelity waveform |
| Protection | Overvoltage, Overcurrent |
| The delay time | 5±2min |

## Ordering information

| Model | Rated capacity(kVA) | Weight(kg) | Outline(cm) |
|---|---|---|---|
| TSD-3000VA | 3 | 27 | 39×26×15 |
| TSD-5000VA | 5 | 32 | 41×28×18 |
| TSD-8000VA | 8 | 40 | 41×28×18 |
| TSD-10000VA | 10 | 45 | 41×28×18 |
| TSD-12000VA | 12 | 51 | 44×32×20.5 |

# TDGC2, TDGC2J, TSGC2, TSGC2J Voltage Regulator



## General

This product is designed and developed with the international advanced compensation technology. It can keep the output voltage steady automatically when the network voltage is fluctuated or the load current is varied, which can ensure the consumer run smoothly. It has the advantage of large capacity, high efficiency, no waveform distortion, simple operation and maintenance, reliable running, full-capacity output under lower input voltage if compared with other voltage stabilizers. It is provided with over-voltage, over-current, phase sequence and so on protection function.

It is suitable for electric supply in small-sized plant, workshop and department in middle, large-sized mining enterprise, and it can be widely used in the precision machine tool, precision instrument, test device, elevator, imported electromechanical device, production flowlime in the mining enterprise, oil field, railway, building site, school, hospital, hotel, scientific research department and so on, it is also suitable for the users in the LV electric network end with low power voltage and big wave range.




## Type designation

T □ G C □ - □ □

- Applicable area (TH-for wet tropical zone, TA-dry tropical zone)
- Rated capacity (kVA)
- Designation No.
- Contact type (“o” type)
- Dry type self cooling
- No. of phase (S-three phases, D-single phase)
- Power supply

F

# TDGC2, TDGC2J, TSGC2, TSGC2J Voltage Regulator

## Specifications & overall dimensions (mm)

TDGC2, TSGC2 Series contact voltage regulator

| Specification & Capacity | Max output capacity (kVA) | Rated input voltage (V) | Rated output voltage (V) | Max output current (A) | Overall size (W×D×L) (mm) | QTY pcs | Package size (W×D×L) (mm) | Net weight (kg) | Gross weight (kg) | Phase |
|---|---|---|---|---|---|---|---|---|---|---|
| TDGC2-0.2 | 0.2 | 220V | 0-250V | 0.8 | 105×130×130 | 12 | 380×347×350 | 25 | 26.5 | 1 |
| TDGC2-0.5 | 0.5 | | | 2 | 125×150×130 | 8 | 380×347×350 | 27 | 28 | |
| TDGC2-1 | 1.0 | | | 4 | 180×200×210 | 4 | 435×255×465 | 25 | 26 | |
| TDGC2-2 | 2.0 | | | 8 | 180×200×210 | 4 | 435×255×465 | 31.5 | 33 | |
| TDGC2-3 | 3.0 | | | 12 | 210×230×235 | 2 | 490×275×270 | 21.5 | 23 | |
| TDGC2-5 | 5.0 | | | 20 | 240×285×250 | 1 | 330×275×290 | 17.5 | 18 | |
| TDGC2-10 | 10.0 | | | 40 | 240×335×400 | 1 | 390×295×505 | 34 | 40 | |
| TDGC2-15 | 15.0 | | | 60 | 240×335×560 | 1 | 390×295×650 | 50 | 58 | |
| TDGC2-20 | 20.0 | | | 80 | 240×340×590 | 1 | 390×295×650 | 53 | 60 | |
| TSGC2-1.5 | 1.5 | 380V | 0-430V | 2 | 125×180×340 | 1 | 200×260×400 | 9.8 | 12 | 3 |
| TSGC2-3 | 3.0 | | | 4 | 180×250×430 | 1 | 300×220×510 | 17 | 21.5 | |
| TSGC2-6 | 6.0 | | | 8 | 180×250×460 | 1 | 300×220×560 | 22 | 27 | |
| TSGC2-9 | 9.0 | | | 12 | 210×250×590 | 1 | 320×260×580 | 29 | 35 | |
| TSGC2-15 | 15.0 | | | 20 | 240×330×560 | 1 | 390×295×650 | 48 | 56 | |
| TSGC2-20 | 20.0 | | | 26.5 | 240×330×580 | 1 | 390×295×650 | 53 | 60 | |
| TSGC2-30 | 30.0 | | | 40 | 350×420×1060 | 1 | 440×450×1170 | 138 | 150 | |

F

TDGC2, TSGC2 Series contact voltage regulator

| Specification & Capacity | Max output capacity (kVA) | Rated input voltage (V) | Rated output voltage (V) | Max output current (A) | Overall size (W×D×L) (mm) | QTY pcs | Package size (W×D×L) (mm) | Net weight (kg) | Gross weight (kg) | Phase |
|---|---|---|---|---|---|---|---|---|---|---|
| TDGC2J-0.5 | 0.5 | 220V | 0-250V | 2 | 130×150×160 | 8 | 330×295×455 | 30 | 31.5 | 1 |
| TDGC2J-1 | 1.0 | | | 4 | 185×200×215 | 4 | 430×395×275 | 26 | 27.5 | |
| TDGC2J-2 | 2.0 | | | 8 | 230×240×215 | 2 | 460×250×245 | 18 | 19.5 | |
| TDGC2J-3 | 3.0 | | | 12 | 265×270×215 | 2 | 490×280×255 | 26 | 27 | |
| TDGC2J-5 | 5.0 | | | 20 | 350×395×260 | 1 | 430×430×340 | 25 | 29 | |
| TDGC2J-7 | 7.0 | | | 28 | 350×39*0×260 | 1 | 430×430×340 | 27 | 30.5 | |
| TDGC2J-10 | 10.0 | | | 40 | 350×410×420 | 1 | 430×430×500 | 47.5 | 51 | |
| TDGC2J-15 | 15.0 | | | 60 | 350×410×570 | 1 | 430×430×690 | 67 | 73 | |
| TDGC2J-20 | 20.0 | | | 80 | 350×410×570 | 1 | 430×430×690 | 80 | 86 | |
| TDGC2J-30 | 30.0 | | | 120 | 350×410×1080 | 1 | 440×440×1170 | 138 | 150 | |
| TSGC2J-1.5 | 1.5 | 380V | 0-430V | 2 | 130×150×420 | 1 | 200×260×510 | 11 | 14.5 | 3 |
| TSGC2J-3 | 3.0 | | | 4 | 200×185×510 | 1 | 210×230×570 | 19.5 | 22.5 | |
| TSGC2J-6 | 6.0 | | | 8 | 230×240×510 | 1 | 280×280×570 | 28 | 32.5 | |
| TSGC2J-9 | 9.0 | | | 12 | 265×270×510 | 1 | 285×330×590 | 39 | 44 | |
| TSGC2J-15 | 15.0 | | | 20 | 350×395×570 | 1 | 440×430×690 | 66 | 72 | |
| TSGC2J-20 | 20.0 | | | 27 | 350×395×570 | 1 | 440×430×690 | 80 | 86 | |
| TSGC2J-30 | 30.0 | | | 40 | 350×430×1060 | 1 | 440×450×1170 | 138 | 150 | |

# BK2 Control Transformer

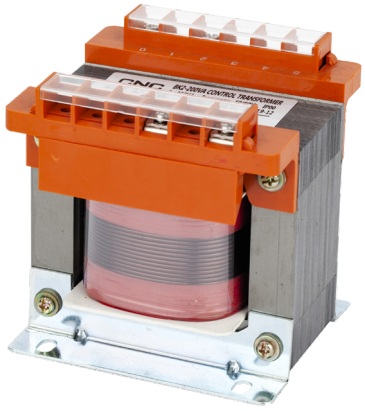

## General

BK series control transformer for 50~60Hz, voltage to 500V circuits, is used as the control power supply in machine tools, mechanical equipment, local lighting and power indicator light.

BK series control transformer adopts the advantage of similar products at home and abroad for many years as advanced manufacturing techniques and rigorous design, and advanced optimization methods terminals. It is designed with excellent performance, reliable operation, low power consumption. small size, wiring security, protection level high, wide applicability and soon. BK series is an ideal transformer power supply that can work under rated load for a long time.

## Type designation

B K □ - □

- Rated capacity (VA)
- Design No.
- Control
- Transformer

## Operating conditions

1. The ambient air temperature is from -5°C to +40°C, 24-hour average does not exceed +35°C;
2. Installation site altitude does not exceed 2000m;
3. Atmospheric relative humidity is less than 50% when the ambient air temperature is +40°C, and higher relative humidity is allowed at a lower temperature. In wet months, the average maximum humidity is 90%, while the monthly average minimum temperature is +25°C, and the change of gel surface temperature should be taken into account.

# BK2 Control Transformer

## Overall and mounting dimensions(mm)

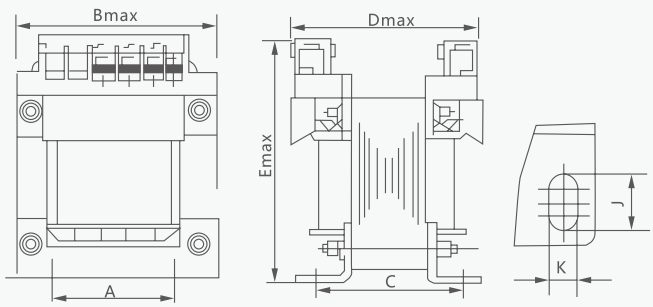


BK2-25~300

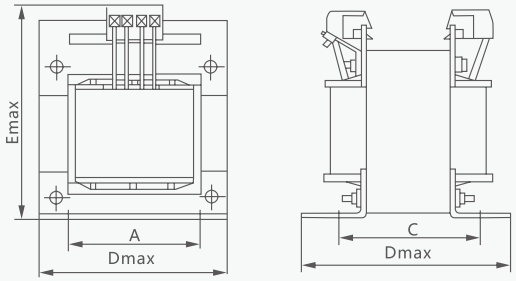


BK2-500~2500

| Item / Dimension / Model | Shape dimension | | | Mounting dimension | | Install hole dimension | Note |
|---|---|---|---|---|---|---|---|
| | B max | D max | E max | A | C | K×J | |
| BK2-25 | 80 | 70 | 90 | 56 | 49±0.5 | 5×8 | |
| BK2-50 | 80 | 72 | 90 | 56 | 51±0.5 | 5×8 | |
| BK2-100 | 98 | 85 | 108 | 84 | 63±0.5 | 5×8 | |
| BK2-150 | 105 | 87 | 110 | 76 | 65±0.5 | 5×8 | |
| BK2-200 | 105 | 100 | 110 | 76 | 76±0.5 | 8×11 | |
| BK2-250 | 105 | 105 | 110 | 76 | 81±0.5 | 8×11 | |
| BK2-300 | 115 | 110 | 125 | 90 | 78±0.5 | 8×11 | |
| BK2-400 | 135 | 120 | 140 | 100 | 85±0.5 | 8×13 | |
| BK2-500 | 135 | 130 | 140 | 100 | 95±0.5 | 8×13 | |
| BK2-600 | 152 | 125 | 150 | 120 | 90±0.5 | 8×13 | |
| BK2-700 | 152 | 125 | 150 | 120 | 90±0.5 | 8×13 | |
| BK2-800 | 152 | 140 | 150 | 120 | 105±0.5 | 8×13 | |
| BK2-1000 | 152 | 155 | 165 | 120 | 120±0.5 | 8×13 | |
| BK2-1500 | 152 | 165 | 165 | 120 | 130±0.5 | 8×13 | Copper |
| BK2-1500 | 170 | 180 | 195 | 130 | 110±0.5 | 8.5×17 | Aluminum |
| BK2-2000 | 170 | 180 | 190 | 130 | 110±0.5 | 8.5×17 | Copper |
| BK2-2000 | 205 | 205 | 240 | 170 | 115±0.5 | 8×11 | Aluminum |
| BK2-2500 | 205 | 225 | 240 | 170 | 130±0.5 | 8×11 | |
| BK2-3000 | 205 | 225 | 240 | 170 | 130±0.5 | 8×11 | Copper |
| BK2-3000 | 205 | 240 | 240 | 170 | 140±0.5 | 8×11 | Aluminum |
| BK2-4000 | 205 | 250 | 240 | 170 | 150±0.5 | 8×11 | Copper |
| BK2-4000 | 235 | 270 | 265 | 190 | 145±0.5 | 8×11 | Aluminum |
| BK2-5000 | 235 | 270 | 265 | 190 | 145±0.5 | 8×11 | Copper |
| BK2-5000 | 235 | 280 | 265 | 190 | 160±0.5 | 8×11 | Aluminum |

# JBK Machine Tool Control Transformer





## General

JBK series machine tool control transformer for AC 50~60 Hz, input voltage less than 660V circuit, is used as the control power supply in all kinds of machine tools, machinery and equipment, local lighting and light power.

With imported materials and advanced technology of manufacturing, this series of transformers can be a replacement of other controllers for working with reliable, low power consumption, small size, wiring safety, wide applicability and so on.

## Type designation

JB K □ - □

- Rated capacity (VA)
- Design No.
- Control
- Transformer

| Item / Dimension / Model | Mounting dimension(mm) | | Shape dimension(mm) | | | Installing hole dimension(mm) |
|---|---|---|---|---|---|---|
| | A | C | Bmax | Dmax | Emax | K*J |
| JBK3-40VA | 55 | 50 | 78 | 73 | 90 | 4.8*9 |
| JBK3-63VA | 55 | 50 | 78 | 73 | 90 | 4.8*9 |
| JBK3-100VA | 64 | 70 | 84 | 90 | 95 | 4.8*9 |
| JBK3-160VA | 84 | 72 | 96 | 96 | 105 | 5.8*11 |
| JBK3-250VA | 84 | 85 | 96 | 107 | 105 | 5.8*11 |
| JBK3-400VA | 90 | 84 | 120 | 115 | 120 | 7*13 |
| JBK3-630VA | 120 | 90 | 150 | 115 | 145 | 7*13 |
| JBK3-800VA | 120 | 105 | 150 | 130 | 145 | 7*13 |
| JBK3-1000VA | 158 | 140 | 200 | 165 | 150 | 7x12 Horizontal type |
| JBK3-1600VA | 185 | 157 | 225 | 185 | 170 | 7x12 Horizontal type |
| JBK3-2500VA | 207 | 170 | 255 | 195 | 180 | 7x12 Horizontal type |

F

## Overall and mounting dimensions(mm)

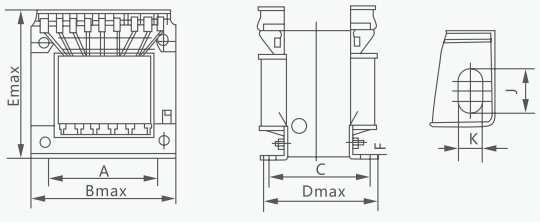


JBK3-40~630

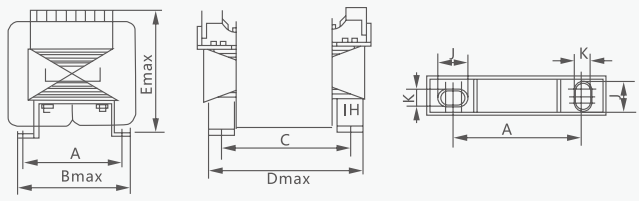


JBK3-1000~2500

# JBK5 Control Transformer



## General

JBK5 series machine tool control transformer is the latest Transformers series that is introduced from a German company. Based on the domestic JBK3 series machine tool control transformers, JBK5 series absorb similar foreign products, advanced methods of terminal structure to connect terminal with the skeleton, improve protection rating and prevent accidental touching circuit. JBK5 series uses domestic IT cold terminal blocks to increase wiring connection intensity.

For transformer 800VA and below, 1000VA, 1600VA, the connections of vertical structure between the silicon steel and silicon steel, silicon steel and plates adopt the bottom gas-shielded arc welding to form a whole. It is clear and simple, especially the bottom one-time molding. The installation dimension is more accurate than the JBK3 series, and the use of high-quality anti-corrosion alloy greatly improves the reliability of grounding performance and product quality. The products comply with VDE0550, IEC204 1, IEC439, JB/T5555,GB5226 and other relevant international, national standards, and won the European Community"CE" certification. It can be used interchangeably with foreign products.

JBK5 series machine tool control transformer for AC 50~60Hz, input voltage less than 500V, the output rated voltage not exceed 220V, is used in the industries of mechanical equipment, general electrical control power and work lights power use.

## Type designation

JBK 5 □ - □

- Tropical products
- Rated capacity (VA)
- Design No.
- Control transformer

F

## Technical data

| Model | Capacity (VA) | Power (%) | Output voltage under loading | | Output voltage under loading | | Note |
|---|---|---|---|---|---|---|---|
| | | | signal winding | control winding | signal winding | control winding | |
| JBK5-40 | 40 | 80 | 6≥$U_m$ > 5 m<br>12≥$U_m$ > 10 | 95%~105% UH | 1.1Um | AC380 ±5%<br>AC220 ±5% | AC220 (127) 110<br>48 36 24<br>12 6 |
| JBK5-60 | 63 | 80 | | | | | |
| JBK5-100 | 100 | 80 | | | | | |
| JBK5-160 | 160 | 85 | | | | | |
| JBK5-250 | 250 | 85 | | | | | |
| JBK5-400 | 400 | 85 | | | | | |
| JBK5-630 | 630 | 85 | | | | | |
| JBK5-800 | 800 | 90 | | | | | |
| JBK5-1000 | 1000 | 90 | | | | | |
| JBK5-1600 | 1600 | 90 | 6≥$U_m$ > 5 m | | | | |
| JBK5-2500 | 2500 | 90 | 12≥$U_m$ > 10 | | | | |

# JBK5 Control Transformer

## Overall and mounting dimensions(mm)

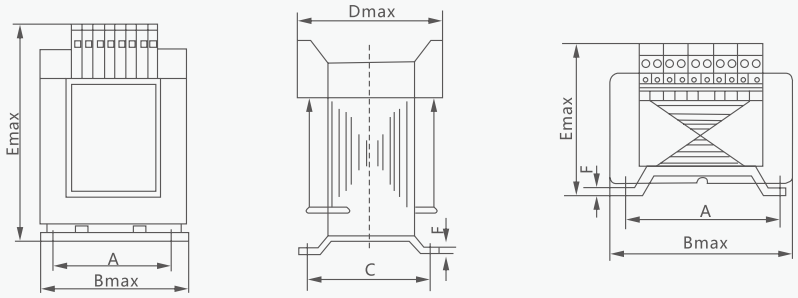


JBK5-40~800

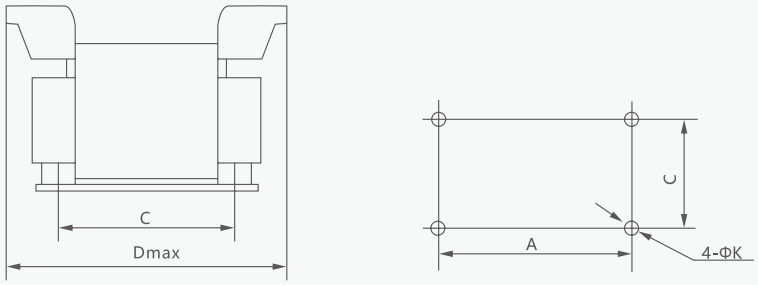


JBK5-1000~2500

| Model | Mounting dimension(mm) | | Shape dimension(mm) | | | | Installing hole |
|---|---|---|---|---|---|---|---|
| | A | C | Bmax | Dmax | Emax | Fmax | K |
| JBK5-40VA | 60 | 45 | 78 | 74 | 95 | 1.2 | 4.6 |
| JBK5-63VA | 65 | 62 | 84 | 90 | 100 | 1.2 | 4.6 |
| JBK5-100VA | 82 | 75 | 96 | 91 | 110 | 1.5 | 5.5 |
| JBK5-160VA | 82 | 85 | 96 | 92 | 110 | 1.5 | 5.8 |
| JBK5-250VA | 95 | 77 | 120 | 93 | 130 | 1.5 | 5.8 |
| JBK5-400VA | 95 | 85 | 120 | 94 | 130 | 2 | 5.8 |
| JBK5-630VA | 95 | 96 | 120 | 95 | 130 | 2 | 7 |
| JBK5-800VA | 125 | 91 | 150 | 96 | 148 | 2 | 7 |
| JBK5-1000VA | 125 | 103 | 150 | 97 | 148 | 3 | 7 |
| JBK5-1600VA | 158 | 140 | 200 | 98 | 135 | 3 | 7 |
| JBK5-2500VA | 207 | 170 | 255 | 100 | 160 | 4 | 7 |

# SG Three-phase Dry Type Transformer



## General

SG series three-phase dry-type transformers are widely used in various occasions of three-phase power supply with AC 50~60Hz, input and output voltage not exceeding 500V. It is suitable for various input and output voltage levels, joining groups, adjusting the number of turns and positions (generally ±5%), winding capacity distribution, single-phase with secondary windings, rectifier circuit, with shell or not, etc. According to the requirements of users, the products can be meticulously designed and processed.

## Type designation

S G □ - □

- Voltage grade kV
- Rated capacity
- Dry type transformer
- Three phase

## Technical data

| Model (kVA) | Voltage | | Coupling group tab | Shape dimension | | | | | K×J | The box dimension(Copper) | | | The box dimension(Aluminum) | | |
|---|---|---|---|---|---|---|---|---|---|---|---|---|---|---|---|
| | Input | Output | | Bmax | Dmax ±5 | Emax | A | C ±5 | | Bmax | Dmax | Emax | Bmax | Dmax | Emax |
| SG-300VA | 660<br>400<br>380<br>200 | 380<br>220<br>110<br>36 | Y/yn0(Y/Y0)<br>Y/d(Y/ △ )<br>D/y( △ /y)<br>D/d( △ / △ ) | 180 | 95 | 185 | 100 | 75 | 6×14 | | | | | | |
| SG-500VA | | | | 180 | 95 | 185 | 100 | 75 | 6×14 | | | | | | |
| SG-1000VA | | | | 180 | 110 | 185 | 100 | 90 | 6×14 | | | | | | |
| SG-1600VA | | | | 230 | 125 | 205 | 130 | 100 | 9×16 | | | | | | |
| SG-2000VA | | | | 230 | 125 | 205 | 130 | 100 | 9×16 | | | | | | |
| SG-3000VA | | | | 240 | 145 | 215 | 130 | 120 | 9×16 | | | | | | |
| SG-4000VA | | | | 240 | 155 | 235 | 130 | 130 | 9×16 | | | | | | |
| SG-5000VA | | | | 320 | 160 | 255 | 180 | 115 | 10×20 | 400 | 330 | 480 | 400 | 330 | 480 |
| SG-6000VA | | | | 300 | 165 | 280 | 180 | 130 | 10×20 | 400 | 330 | 480 | 400 | 330 | 480 |
| SG-8000VA | | | | 300 | 175 | 280 | 180 | 140 | 10×20 | 450 | 360 | 480 | 450 | 360 | 480 |
| SG-10kVA | | | | 360 | 180 | 305 | 215 | 140 | 10×20 | 450 | 360 | 480 | 450 | 360 | 480 |
| SG-15kVA | | | | 360 | 200 | 335 | 215 | 155 | 10×20 | 450 | 360 | 480 | 490 | 400 | 540 |
| SG-20kVA | | | | 420 | 210 | 350 | 250 | 170 | 10×20 | 490 | 400 | 540 | 490 | 400 | 540 |
| SG-25kVA | | | | 420 | 220 | 350 | 250 | 180 | 10×20 | 490 | 400 | 540 | 490 | 400 | 540 |
| SG-30kVA | | | | 420 | 230 | 380 | 250 | 190 | 10×20 | 490 | 400 | 540 | 580 | 410 | 630 |
| SG-40kVA | | | | 480 | 240 | 410 | 280 | 205 | 12×20 | 730 | 490 | 780 | 480 | 240 | 410 |
| SG-50kVA | | | | 680 | 350 | 550 | 420 | 220 | Φ18 | 800 | 510 | 840 | 800 | 510 | 840 |
| SG-60kVA | | | | 680 | 380 | 550 | 440 | 230 | Φ18 | 800 | 510 | 840 | 800 | 510 | 840 |
| SG-80kVA | | | | 750 | 400 | 620 | 480 | 250 | Φ20 | 850 | 510 | 840 | 850 | 510 | 840 |
| SG-100kVA | | | | 780 | 420 | 650 | 500 | 250 | Φ22 | 900 | 550 | 890 | 900 | 550 | 890 |

# SG Three-phase Dry Type Transformer



The box of SG (optional)

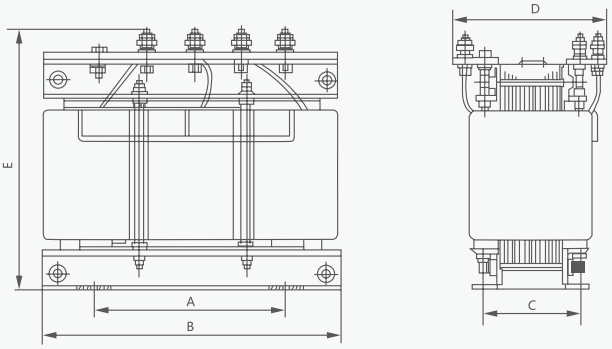


## Note

1. The size is not indicated on the specification and shall be determined according to the user's requirements .The dimensions listed are for reference: the output current is larger than the product 300A.AS a special customized product quality, its product size would be changed.
2. Listed in the table rated input and output voltage can be any combination as needed.
3. The voltage listed in the table and size can be determined through consultation according to user requirements.

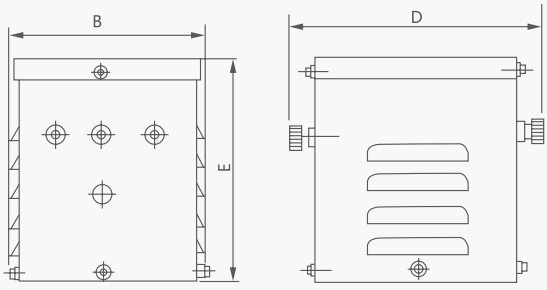


0.3~3KVA

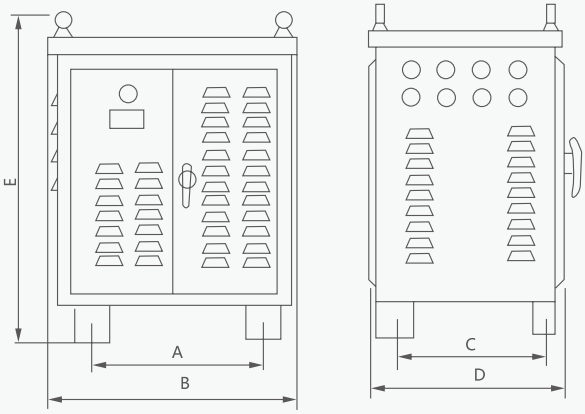


5~100KVA

F

# SBK Series Low Voltage Three-phase Dry Protection Transformer



## General

The SBK series three-phase dry-type transformers are suitable for AC circuits with a frequency of 50Hz. They can be used as control power supplies and lighting power supplies for machine tools, mechanical equipment, low-voltage complete switchgear, and electrical drive control devices, and they can also serve as small power sources.

## Type designation

SBK - 200kVA

| Dry Protection Transformer | | Capacity |
|---|---|---|
| SBK | - | 200kVA |
| SBK | | 5kVA:5kVA<br>6kVA:6kVA<br>8kVA:8kVA<br>200kVA:200kVA<br>400kVA:400kVA<br>1000kVA:1000kVA |

F

# SBK Series Low Voltage Three-phase Dry Protection Transformer

## Overall and mounting dimensions(mm)

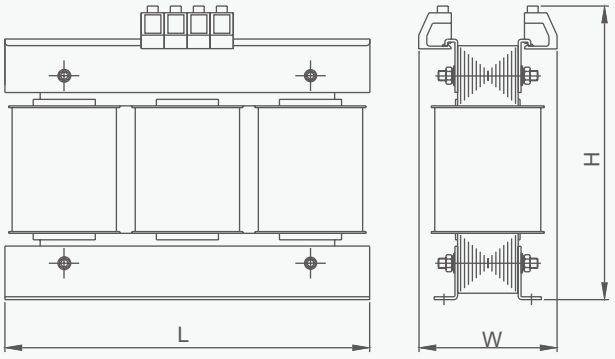


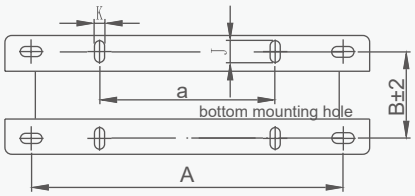


SBK without housing

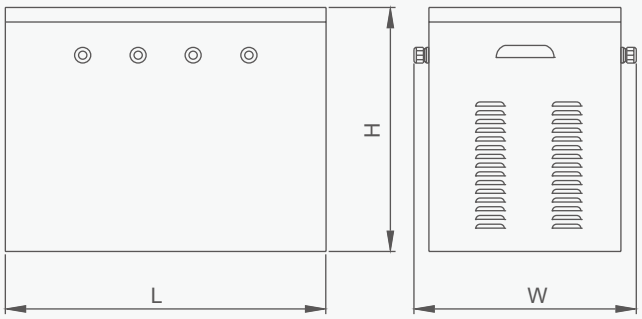


SBK with iron casing

F

SBK 0.3-4kVA

| Model specifications | Dimensions | | | Installation Dimensions | | Mounting Holes | Iron Casing Dimensions | | | Remarks |
|---|---|---|---|---|---|---|---|---|---|---|
| | Length (L) | Width (W) | Height (H) | Length A (a) | Width B | K*J | Length L | Width W | Height H | |
| SBK-0.3kVA | 150 | 120 | 160 | (85) | 65 | 6*12 | 290 | 210 | 185 | Copper coil |
| SBK-0.3kVA | 180 | 120 | 180 | (100) | 70 | 6*14 | 290 | 210 | 185 | Aluminum coil |
| SBK-0.5kVA | 180 | 130 | 185 | (100) | 80 | 6*14 | 290 | 210 | 185 | Copper and aluminum coils are the same size |
| SBK-1kVA | 180 | 140 | 185 | (100) | 90 | 6*14 | 290 | 210 | 185 | Copper and aluminum coils are the same size |
| SBK-1.5kVA | 230 | 135 | 195 | 180(122) | 92 | 8*13 | 330 | 255 | 225 | Copper coil |
| SBK-1.5kVA | 230 | 145 | 205 | 180(122) | 92 | 8*13 | 330 | 255 | 225 | Aluminum coil |
| SBK-2kVA | 230 | 140 | 195 | 180(122) | 97 | 8*13 | 330 | 255 | 225 | Copper coil |
| SBK-2kVA | 240 | 155 | 210 | 180(122) | 102 | 8*13 | 330 | 255 | 225 | Aluminum coil |
| SBK-2.5kVA | 240 | 145 | 210 | 180(122) | 102 | 8*13 | 370 | 255 | 240 | Copper coil |
| SBK-2.5kVA | 240 | 155 | 230 | 180(122) | 102 | 8*13 | 370 | 255 | 240 | Aluminum coil |
| SBK-3kVA | 240 | 160 | 210 | 180(122) | 117 | 8*13 | 370 | 255 | 240 | Copper coil |
| SBK-3kVA | 240 | 170 | 230 | 180(122) | 117 | 8*13 | 370 | 255 | 240 | Aluminum coil |
| SBK-4kVA | 240 | 170 | 230 | 180(122) | 127 | 8*13 | 420 | 295 | 280 | Copper coil |
| SBK-4kVA | 300 | 150 | 280 | 240(180) | 107 | 11*23 | 420 | 295 | 280 | Aluminum coil |

# SBK Series Low Voltage Three-phase Dry Protection Transformer

## Overall and mounting dimensions(mm)

Figure 1 Figure 2 Figure 3

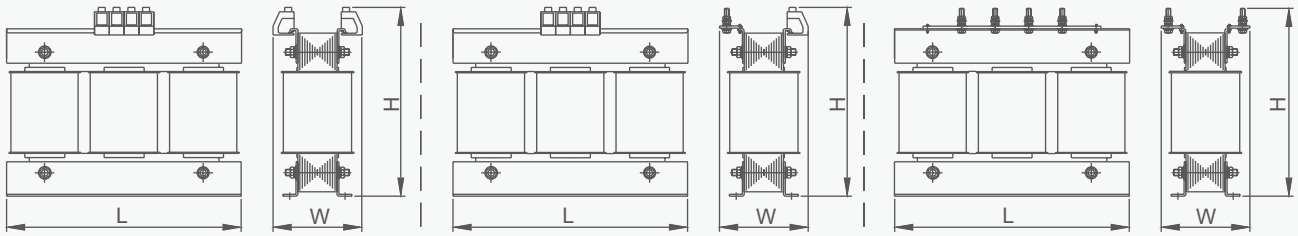


Terminal Style

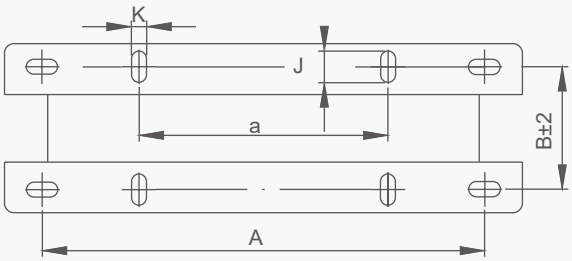


SBK without housing
bottom mounting hole

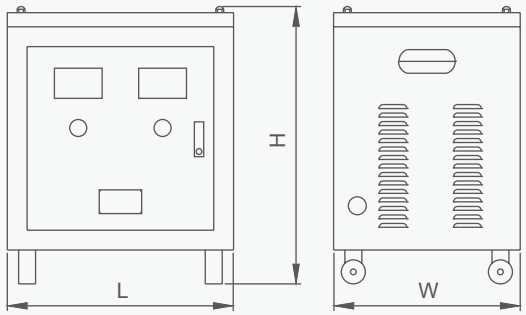


SBK with iron casing

F

SBK 5-30kVA

| Model specifications | Dimensions | | | Installation Dimensions | | Mounting Holes | Iron Casing Dimensions | | | Remarks |
|---|---|---|---|---|---|---|---|---|---|---|
| | Length (L) | Width (W) | Height (H) | Length A (a) | Width B | K*J | Length L | Width W | Height H | |
| SBK-5kVA | 300 | 155 | 280 | 240(180) | 117 | 11*23 | 400 | 300 | 480 | Copper coil |
| SBK-5kVA | 300 | 165 | 285 | 240(180) | 117 | 11*23 | 400 | 300 | 480 | Aluminum coil |
| SBK-6kVA | 300 | 165 | 280 | 240(180) | 127 | 11*23 | 400 | 330 | 480 | Copper coil |
| SBK-6kVA | 300 | 175 | 285 | 240(180) | 127 | 11*23 | 400 | 330 | 480 | Aluminum coil |
| SBK-8kVA | 300 | 175 | 280 | 240(180) | 137 | 11*23 | 400 | 330 | 480 | Copper coil |
| SBK-8kVA | 360 | 175 | 300 | 275(215) | 133 | 11*23 | 450 | 360 | 480 | Aluminum coil |
| SBK-10kVA | 360 | 185 | 300 | 275(215) | 142 | 11*23 | 450 | 360 | 480 | Copper coil |
| SBK-10kVA | 360 | 215 | 350 | 275(215) | 142 | 11*23 | 450 | 360 | 480 | Aluminum coil |
| SBK-15kVA | 360 | 240 | 300 | 275(215) | 162 | 11*23 | 450 | 360 | 480 | Copper coil |
| SBK-15kVA | 420 | 280 | 360 | 250(205) | 170 | 11*23 | 490 | 400 | 540 | Aluminum coil |
| SBK-20kVA | 420 | 290 | 360 | 305(250) | 180 | 11*23 | 490 | 400 | 540 | Copper coil |
| SBK-20kVA | 420 | 290 | 400 | 305(250) | 180 | 11*23 | 490 | 400 | 540 | Aluminum coil |
| SBK-25kVA | 420 | 300 | 360 | 305(250) | 190 | 11*23 | 490 | 400 | 540 | Copper coil |
| SBK-25kVA | 420 | 300 | 400 | 305(250) | 190 | 11*23 | 490 | 400 | 540 | Aluminum coil |
| SBK-30kVA | 420 | 310 | 400 | 305(250) | 200 | 11*23 | 490 | 400 | 540 | Copper coil |
| SBK-30kVA | 480 | 310 | 460 | 355(280) | 195 | 11*23 | 580 | 400 | 630 | Aluminum coil |

# SBK Series Low Voltage Three-phase Dry Protection Transformer

Figure 1

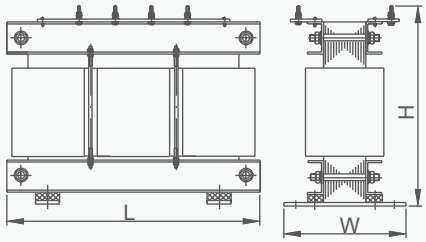


Figure 2

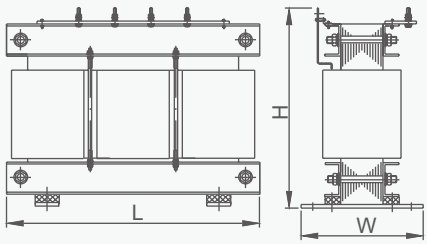


Figure 3

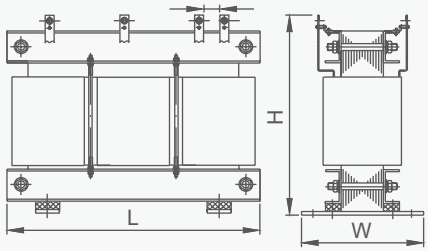


Terminal Style

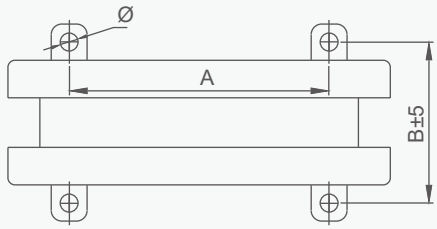


SBK without housing
bottom mounting hole

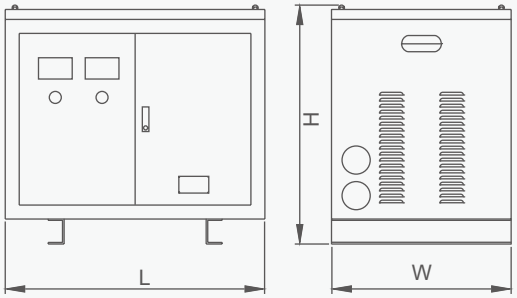


SBK with iron casing

F

SBK 40-300kVA

| Model specifications | Dimensions | | | Installation Dimensions | | Mounting Holes | Iron Casing Dimensions | | | Remarks |
|---|---|---|---|---|---|---|---|---|---|---|
| | Length (L) | Width (W) | Height (H) | Length A (a) | Width B | Ø | Length L | Width W | Height H | |
| SBK-40kVA | 660 | 330 | 550 | 430 | 215 | 25 | 750 | 490 | 780 | Copper and aluminum coils are the same size |
| SBK-50kVA | 660 | 330 | 550 | 430 | 215 | 25 | 750 | 490 | 780 | Copper and aluminum coils are the same size |
| SBK-60kVA | 680 | 340 | 600 | 470 | 230 | 25 | 800 | 510 | 840 | Copper and aluminum coils are the same size |
| SBK-80kVA | 730 | 350 | 650 | 470 | 240 | 25 | 850 | 510 | 850 | Copper and aluminum coils are the same size |
| SBK-100kVA | 780 | 370 | 670 | 520 | 265 | 25 | 900 | 550 | 890 | Copper and aluminum coils are the same size |
| SBK-150kVA | 840 | 400 | 730 | 550 | 275 | 25 | 950 | 550 | 930 | Copper coil |
| SBK-150kVA | 880 | 450 | 800 | 570 | 280 | 25 | 1000 | 650 | 1000 | Aluminum coil |
| SBK-200kVA | 880 | 450 | 800 | 570 | 280 | 25 | 1000 | 650 | 1000 | Copper coil |
| SBK-200kVA | 1000 | 550 | 950 | 630 | 320 | 25 | 1150 | 750 | 1150 | Aluminum coil |
| SBK-250kVA | 980 | 500 | 880 | 605 | 300 | 25 | 1100 | 700 | 1100 | Copper coil |
| SBK-250kVA | 1040 | 580 | 1000 | 660 | 330 | 25 | 1200 | 800 | 1200 | Aluminum coil |
| SBK-300kVA | 1000 | 550 | 950 | 650 | 320 | 25 | 1150 | 750 | 1150 | Copper coil |
| SBK-300kVA | 1100 | 600 | 1050 | 690 | 350 | 25 | 1250 | 850 | 1250 | Aluminum coil |

# SBK Series Low Voltage Three-phase Dry Protection Transformer

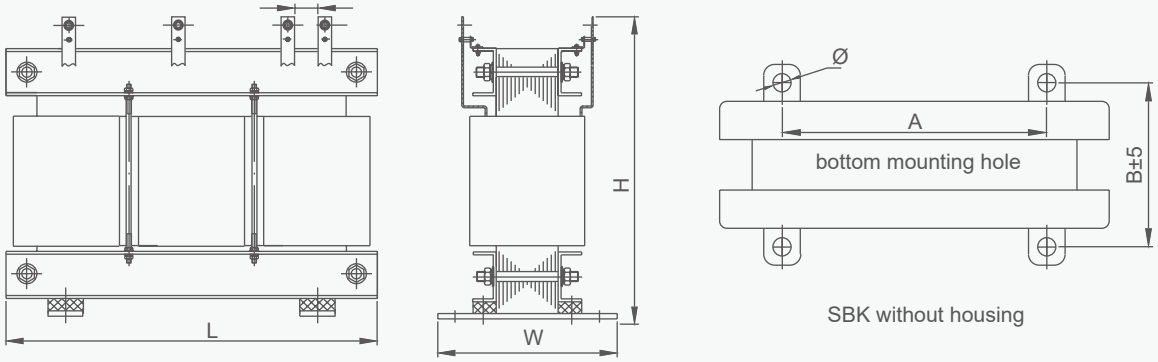


SBK without housing

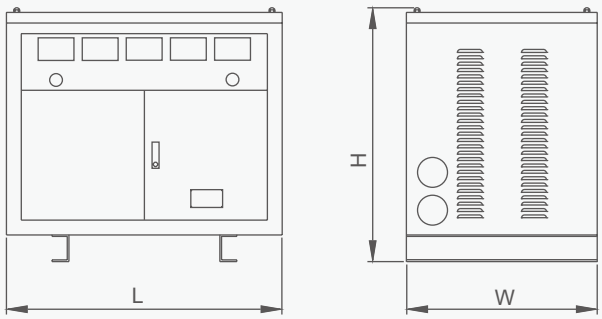


SBK with iron casing

F

SBK 400-1000kVA

| Model specifications | Dimensions | | | Installation Dimensions | | Mounting Holes | Iron Casing Dimensions | | | Remarks |
|---|---|---|---|---|---|---|---|---|---|---|
| | Length (L) | Width (W) | Height (H) | Length A (a) | Width B | K*J | Length L | Width W | Height H | |
| SBK-400kVA | 1100 | 600 | 1080 | 710 | 540 | 25 | 1300 | 850 | 1400 | Copper coil |
| SBK-500kVA | 1200 | 600 | 1200 | 730 | 540 | 25 | 1400 | 850 | 1450 | Copper coil |
| SBK-750kVA | 1350 | 700 | 1300 | 760 | 640 | 25 | 1550 | 950 | 1550 | Copper coil |
| SBK-1000kVA | 1450 | 800 | 1400 | 800 | 740 | 25 | 1700 | 1100 | 1600 | Copper coil |

## Power Supply

# LRS-35 Switching Power Supply



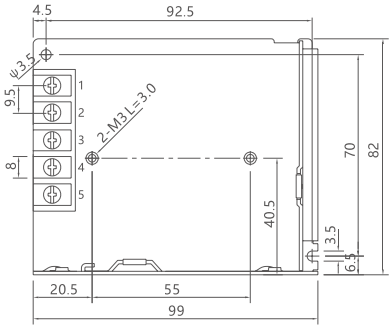


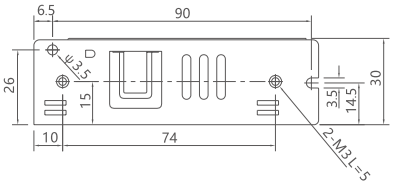


### Technical data

| Model | | LRS-35-12 | LRS-35-15 | LRS-35-24 | LRS-35-36 | LRS-35-48 |
|---|---|---|---|---|---|---|
| Output | DC Voltage | 12V | 15V | 24V | 36V | 48V |
| | Rated Current | 3A | 2.4A | 1.5A | 1A | 0.8A |
| | Current Range | 0 ~ 3A | 0 ~ 2.4A | 0 ~ 1.5A | 0 ~ 1A | 0 ~ 0.8A |
| | Rated Power | 36W | 36W | 36W | 36W | 38.4W |
| | Ripple & Noise (Max.)Note.2 | 120mVp-p | 120mVp-p | 150mVp-p | 200mVp-p | 200mVp-p |
| | Voltage Adj. Range | 10.2 ~ 13.8V | 13.5 ~ 18V | 21.6 ~ 28.8V | 32.4 ~ 39.6V | 43.2 ~ 52.8V |
| | Voltage Tolerance Note.3 | ±1.0% | ±1.0% | ±1.0% | ±1.0% | ±1.0% |
| | Line Regulation Note.4 | ±0.5% | ±0.5% | ±0.5% | ±0.5% | ±0.5% |
| | Load Regulation Note.5 | ±0.5% | ±0.5% | ±0.5% | ±0.5% | ±0.5% |
| | Setup, Rise Time | 1000ms, 30ms/230VAC 2000ms,30ms/115VAC at full load | | | | |
| | Hold Up Time (Typ.) | 30ms/230VAC 12ms/115VAC at full load | | | | |
| Input | Voltage Range | 85 ~ 264VAC 120 ~ 373VDC | | | | |
| | Frequency Range | 47 ~ 63Hz | | | | |
| | Efficiency (Typ.) | 86% | 86% | 88% | 88% | 89% |
| | Ac Current (Typ.) | 0.7A/115VAC 0.42A/230VAC | | | | |
| | Inrush Current (Typ.) | COLD START 45A/230VAC | | | | |
| | Leakage Current | <0.75mA / 240VAC | | | | |
| Protection | Over Load | 110 ~ 150% rated output power | | | | |
| | | Protection type : Hiccup mode, recovers automatically after fault condition is removed | | | | |
| Environment | Working Temp. | -20 ~ +70°C (Refer to "Derating Curve") | | | | |
| | Working Humidity | 20 ~ 90% RH non-condensing | | | | |
| | Storage Temp., Humidity | -40 ~ +85°C, 10 ~ 95% RH | | | | |
| | Temp. Coefficient | ±0.03%/°C (0 ~ 50°C) | | | | |
| | Vibration | 10 ~ 500Hz, 5G 10min./1cycle, 60min. each along X, Y, Z axes | | | | |
| Safety & EMC | Standards | EN60950-1, EN60335-1, EN61558-1 2 16 | | | | |
| | Withstand Voltage | I/P-O/P:1.5kVAC I/P-FG:1.5kVAC O/P-FG:0.5kVAC | | | | |
| | Isolation Resistance | I/P-O/P, I/P-FG, O/P-FG:100M Ohms / 500VDC / 25°C/ 70% RH | | | | |
| Others | MTBF | 763.6K hrs min. MIL-HDBK-217F (25°C) | | | | |
| | Dimension | 99*82*30mm (L*W*H) | | | | |
| | Weight | 0.23Kg | | | | |

F

# LRS-50 Switching Power Supply



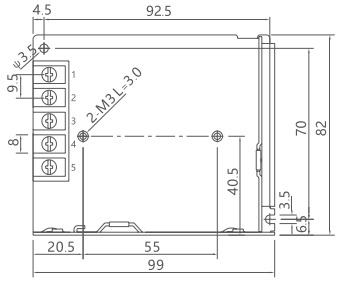


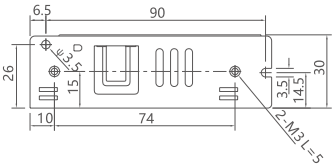


## Technical data

| Model | | LRS-50-12 | LRS-50-15 | LRS-50-24 | LRS-50-36 | LRS-50-48 |
|---|---|---|---|---|---|---|
| Output | DC Voltage | 12V | 15V | 24V | 36V | 48V |
| | Rated Current | 4.2A | 3.4A | 2.2A | 1.45A | 1.1A |
| | Current Range | 0 ~ 4.2A | 0 ~ 3.4A | 0 ~ 2.2A | 0 ~ 1.45A | 0 ~ 1.1A |
| | Rated Power | 50.4W | 51W | 52.8W | 52.2W | 52.8W |
| | Ripple & Noise (Max.)Note.2 | 120mVp-p | 120mVp-p | 150mVp-p | 200mVp-p | 200mVp-p |
| | Voltage Adj. Range | 10.2 ~ 13.8V | 13.5 ~ 18V | 21.6 ~ 28.8V | 32.4 ~ 39.6V | 43.2 ~ 52.8V |
| | Voltage Tolerance Note.3 | ±1.0% | ±1.0% | ±1.0% | ±1.0% | ±1.0% |
| | Line Regulation Note.4 | ±0.5% | ±0.5% | ±0.5% | ±0.5% | ±0.5% |
| | Load Regulation Note.5 | ±0.5% | ±0.5% | ±0.5% | ±0.5% | ±0.5% |
| | Setup, Rise Time | 1000ms, 30ms/230VAC 2000ms,30ms/115VAC at full load | | | | |
| | Hold Up Time (Typ.) | 30ms/230VAC 12ms/115VAC at full load | | | | |
| Input | Voltage Range | 85 ~ 264VAC 120 ~ 373VDC | | | | |
| | Frequency Range | 47 ~ 63Hz | | | | |
| | Efficiency (Typ.) | 86% | 88% | 88% | 89% | 90% |
| | Ac Current (Typ.) | 0.95A/115VAC 0.56A/230VAC | | | | |
| | Inrush Current (Typ.) | COLD START 45A/230VAC | | | | |
| | Leakage Current | <0.75mA / 240VAC | | | | |
| Protection | Over Load | 110 ~ 150% rated output power | | | | |
| | | Protection type : Hiccup mode, recovers automatically after fault condition is removed | | | | |
| Environment | Working Temp. | -20 ~ +70°C (Refer to "Derating Curve") | | | | |
| | Working Humidity | 20 ~ 90% RH non-condensing | | | | |
| | Storage Temp., Humidity | -40 ~ +85°C, 10 ~ 95% RH | | | | |
| | Temp. Coefficient | ±0.03%/°C (0 ~ 50°C) | | | | |
| | Vibration | 10 ~ 500Hz, 5G 10min./1cycle, 60min. each along X, Y, Z axes | | | | |
| Safety & EMC | Standards | EN60950-1, EN60335-1, EN61558-1 2 16 | | | | |
| | Withstand Voltage | I/P-O/P:1.5kVAC I/P-FG:1.5kVAC O/P-FG:0.5kVAC | | | | |
| | Isolation Resistance | I/P-O/P, I/P-FG, O/P-FG:100M Ohms / 500VDC / 25°C/ 70% RH | | | | |
| Others | MTBF | 645K hrs min. MIL-HDBK-217F (25°C) | | | | |
| | Dimension | 99*82*30mm (L*W*H) | | | | |
| | Weight | 0.23Kg; 60pcs/14.8Kg/0.88CUFT | | | | |

## Power Supply

# LRS-60 Switching Power Supply



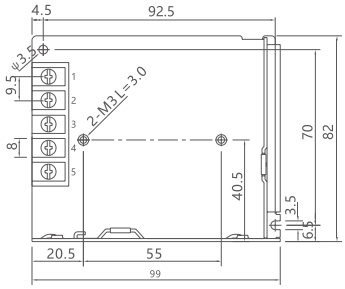


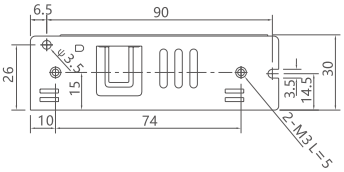


## Technical data

| Model | | LRS-60-12 | LRS-60-15 | LRS-60-24 | LRS-60-36 | LRS-60-48 |
|---|---|---|---|---|---|---|
| Output | DC Voltage | 12V | 15V | 24V | 36V | 48V |
| | Rated Current | 5A | 4A | 2.5A | 1.7A | 1.3A |
| | Current Range | 0 ~ 5A | 0 ~ 4A | 0 ~ 2.5A | 0 ~ 1.7A | 0 ~ 1.3A |
| | Rated Power | 60W | 60W | 60W | 61.2W | 62.4W |
| | Ripple & Noise (Max.)Note.2 | 120mVp-p | 120mVp-p | 150mVp-p | 200mVp-p | 200mVp-p |
| | Voltage Adj. Range | 10.2 ~ 13.8V | 13.5 ~ 18V | 21.6 ~ 28.8V | 32.4 ~ 39.6V | 43.2 ~ 52.8V |
| | Voltage Tolerance Note.3 | ±1.0% | ±1.0% | ±1.0% | ±1.0% | ±1.0% |
| | Line Regulation Note.4 | ±0.5% | ±0.5% | ±0.5% | ±0.5% | ±0.5% |
| | Load Regulation Note.5 | ±0.5% | ±0.5% | ±0.5% | ±0.5% | ±0.5% |
| | Setup, Rise Time | 1000ms, 30ms/230VAC 2000ms,30ms/115VAC at full load | | | | |
| | Hold Up Time (Typ.) | 30ms/230VAC 12ms/115VAC at full load | | | | |
| Input | Voltage Range | 85 ~ 264VAC 120 ~ 373VDC | | | | |
| | Frequency Range | 47 ~ 63Hz | | | | |
| | Efficiency (Typ.) | 86% | 88% | 88% | 89% | 90% |
| | Ac Current (Typ.) | 0.95A/115VAC 0.56A/230VAC | | | | |
| | Inrush Current (Typ.) | COLD START 45A/230VAC | | | | |
| | Leakage Current | <0.75mA / 240VAC | | | | |
| Protection | Over Load | 110 ~ 150% rated output power | | | | |
| | | Protection type : Hiccup mode, recovers automatically after fault condition is removed | | | | |
| Environment | Working Temp. | 20 ~ +70°C (Refer to "Derating Curve") | | | | |
| | Working Humidity | 20 ~ 90% RH non-condensing | | | | |
| | Storage Temp., Humidity | -40 ~ +85°C, 10 ~ 95% RH | | | | |
| | Temp. Coefficient | ±0.03%/°C (0 ~ 50°C) | | | | |
| | Vibration | 10 ~ 500Hz, 5G 10min./1cycle, 60min. each along X, Y, Z axes | | | | |
| Safety & EMC | Standards | EN60950-1, EN60335-1, EN61558-1 2 16 | | | | |
| | Withstand Voltage | I/P-O/P:1.5kVAC I/P-FG:1.5kVAC O/P-FG:0.5kVAC | | | | |
| | Isolation Resistance | I/P-O/P, I/P-FG, O/P-FG:100M Ohms / 500VDC / 25°C/ 70% RH | | | | |
| Others | MTBF | 645K hrs min. MIL-HDBK-217F (25°C) | | | | |
| | Dimension | 99*82*30mm (L*W*H) | | | | |
| | Weight | 0.23Kg; 100pcs/23Kg/0.88CUFT | | | | |

F

# LRS-75 Switching Power Supply



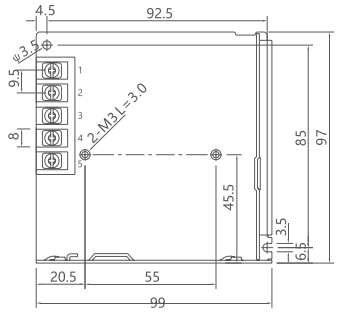


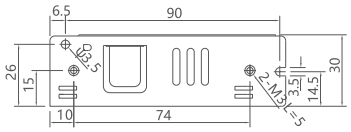


## Technical data

| Model | | LRS-75-12 | LRS-75-15 | LRS-75-24 | LRS-75-36 | LRS-75-48 |
|---|---|---|---|---|---|---|
| Output | DC Voltage | 12V | 15V | 24V | 36V | 48V |
| | Rated Current | 6A | 5A | 3.2A | 2.1A | 1.6A |
| | Current Range | 0 ~ 6A | 0 ~ 5A | 0 ~ 3.2A | 0 ~ 2.1A | 0 ~ 1.6A |
| | Rated Power | 72W | 75W | 76.8W | 75.6W | 76.8W |
| | Ripple & Noise (Max.)Note.2 | 120mVp-p | 120mVp-p | 150mVp-p | 200mVp-p | 200mVp-p |
| | Voltage Adj. Range | 10.2 ~ 13.8V | 13.5 ~ 18V | 21.6 ~ 28.8V | 32.4 ~ 39.6V | 43.2 ~ 52.8V |
| | Voltage Tolerance Note.3 | ±1.0% | ±1.0% | ±1.0% | ±1.0% | ±1.0% |
| | Line Regulation Note.4 | ±0.5% | ±0.5% | ±0.5% | ±0.5% | ±0.5% |
| | Load Regulation Note.5 | ±0.5% | ±0.5% | ±0.5% | ±0.5% | ±0.5% |
| | Setup, Rise Time | 500ms, 30ms/230VAC 500ms,30ms/115VAC at full load | | | | |
| | Hold Up Time (Typ.) | 60ms/230VAC 12ms/115VAC at full load | | | | |
| Input | Voltage Range | 85 ~ 264VAC 120 ~ 373VDC | | | | |
| | Frequency Range | 47 ~ 63Hz | | | | |
| | Efficiency (Typ.) | 89% | 89% | 90% | 91.5% | 91.5% |
| | Ac Current (Typ.) | 1.4A/115VAC 0.85A/230VAC | | | | |
| | Inrush Current (Typ.) | COLD START 50A/230VAC | | | | |
| | Leakage Current | <0.75mA / 240VAC | | | | |
| Protection | Over Load | 110 ~ 150% rated output power | | | | |
| | | Protection type : Hiccup mode, recovers automatically after fault condition is removed | | | | |
| Environment | Working Temp. | -20 ~ +70°C (Refer to "Derating Curve") | | | | |
| | Working Humidity | 20 ~ 90% RH non-condensing | | | | |
| | Storage Temp., Humidity | -40 ~ +85°C, 10 ~ 95% RH | | | | |
| | Temp. Coefficient | ±0.03%/°C (0 ~ 50°C) | | | | |
| | Vibration | 10 ~ 500Hz, 5G 10min./1cycle, 60min. each along X, Y, Z axes | | | | |
| Safety & EMC | Standards | EN60950-1, EN60335-1, EN61558-1 2 16 | | | | |
| | Withstand Voltage | I/P-O/P:1.5kVAC I/P-FG:1.5kVAC O/P-FG:0.5kVAC | | | | |
| | Isolation Resistance | I/P-O/P, I/P-FG, O/P-FG:100M Ohms/500VDC / 25°C/ 70% RH | | | | |
| Others | MTBF | 681.2K hrs min. MIL-HDBK-217F (25°C) | | | | |
| | Dimension | 99*97*30mm (L*W*H) | | | | |
| | Weight | 0.3Kg | | | | |

## Power Supply

# LRS-100 Switching Power Supply



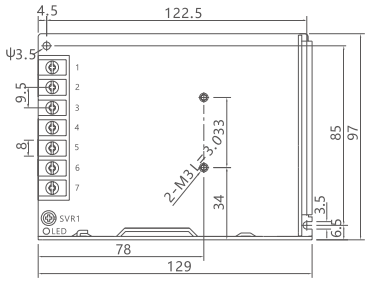


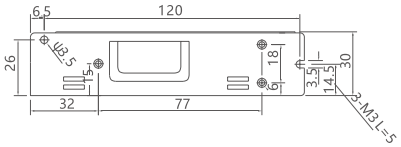


### Technical data

| Model | | LRS-100-12 | LRS-100-15 | LRS-100-24 | LRS-100-36 | LRS-100-48 |
|---|---|---|---|---|---|---|
| Output | DC Voltage | 12V | 15V | 24V | 36V | 48V |
| | Rated Current | 8.5A | 7A | 4.5A | 2.8A | 2.3A |
| | Current Range | 0 ~ 8.5A | 0 ~ 7A | 0 ~ 4.5A | 0 ~ 2.8A | 0 ~ 2.3A |
| | Rated Power | 102W | 105W | 108W | 100.8W | 110.4W |
| | Ripple & Noise (Max.)Note.2 | 120mVp-p | 120mVp-p | 150mVp-p | 200mVp-p | 200mVp-p |
| | Voltage Adj. Range | 10.2 ~ 13.8V | 13.5 ~ 18V | 21.6 ~ 28.8V | 32.4 ~ 39.6V | 43.2 ~ 52.8V |
| | Voltage Tolerance Note.3 | ±1.0% | ±1.0% | ±1.0% | ±1.0% | ±1.0% |
| | Line Regulation Note.4 | ±0.5% | ±0.5% | ±0.5% | ±0.5% | ±0.5% |
| | Load Regulation Note.5 | ±0.5% | ±0.5% | ±0.5% | ±0.5% | ±0.5% |
| | Setup, Rise Time | 500ms, 30ms/230VAC 500ms,30ms/115VAC at full load | | | | |
| | Hold Up Time (Typ.) | 55ms/230VAC 10ms/115VAC at full load | | | | |
| Input | Voltage Range | 85 ~ 264VAC 120 ~ 373VDC (Withstand 300VAC surge for 5sec. Without damage) | | | | |
| | Frequency Range | 47 ~ 63Hz | | | | |
| | Efficiency (Typ.) | 88% | 88.5% | 90% | 90.5% | 91% |
| | Ac Current (Typ.) | 1.9A/115VAC 1.2A/230VAC | | | | |
| | Inrush Current (Typ.) | COLD START 50A/230VAC | | | | |
| | Leakage Current | <0.75mA / 240VAC | | | | |
| Protection | Over Load | 110 ~ 150% rated output power | | | | |
| | | Protection type : Hiccup mode, recovers automatically after fault condition is removed | | | | |
| Environment | Working Temp. | -20 ~ +70°C (Refer to "Derating Curve") | | | | |
| | Working Humidity | 20 ~ 90% RH non-condensing | | | | |
| | Storage Temp., Humidity | -40 ~ +85°C, 10 ~ 95% RH | | | | |
| | Temp. Coefficient | ±0.03%/°C (0 ~ 50°C) | | | | |
| | Vibration | 10 ~ 500Hz, 5G 10min./1cycle, 60min. each along X, Y, Z axes | | | | |
| Safety & EMC | Standards | EN60950-1, EN60335-1, EN61558-1 | | | | |
| | Withstand Voltage | I/P-O/P:1.5kVAC I/P-FG:1.5kVAC O/P-FG:0.5kVAC | | | | |
| | Isolation Resistance | I/P-O/P, I/P-FG, O/P-FG:100M Ohms / 500VDC / 25°C/ 70% RH | | | | |
| Others | MTBF | 720.6K hrs min. MIL-HDBK-217F (25°C) | | | | |
| | Dimension | 129*97*30mm (L*W*H) | | | | |
| | Weight | 0.34Kg | | | | |

F

## Power Supply

# LRS-120 Switching Power Supply



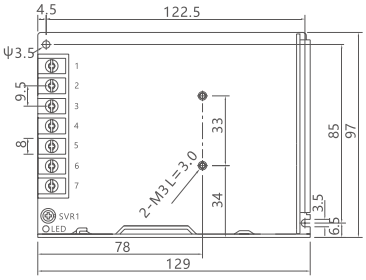


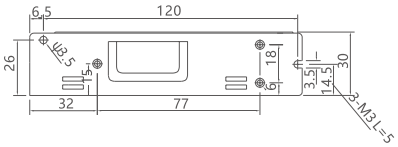


### Technical data

| Model | | LRS-120-12 | LRS-120-15 | LRS-120-24 | LRS-120-36 | LRS-120-48 |
|---|---|---|---|---|---|---|
| Output | DC Voltage | 12V | 15V | 24V | 36V | 48V |
| | Rated Current | 10A | 8A | 5A | 3.3A | 2.5A |
| | Current Range | 0 ~ 10A | 0 ~ 8A | 0 ~ 5A | 0 ~ 3.3A | 0 ~ 2.5A |
| | Rated Power | 120W | 120W | 120W | 118.8W | 120W |
| | Ripple & Noise (Max.)Note.2 | 120mVp-p | 120mVp-p | 150mVp-p | 200mVp-p | 200mVp-p |
| | Voltage Adj. Range | 10.2 ~ 13.8V | 13.5 ~ 18V | 21.6 ~ 28.8V | 32.4 ~ 39.6V | 43.2 ~ 52.8V |
| | Voltage Tolerance Note.3 | ±1.0% | ±1.0% | ±1.0% | ±1.0% | ±1.0% |
| | Line Regulation Note.4 | ±0.5% | ±0.5% | ±0.5% | ±0.5% | ±0.5% |
| | Load Regulation Note.5 | ±0.5% | ±0.5% | ±0.5% | ±0.5% | ±0.5% |
| | Setup, Rise Time | 500ms, 30ms/230VAC 500ms,30ms/115VAC at full load | | | | |
| | Hold Up Time (Typ.) | 55ms/230VAC 10ms/115VAC at full load | | | | |
| Input | Voltage Range | 85 ~ 264VAC 120 ~ 373VDC (Withstand 300VAC surge for 5sec. Without damage) | | | | |
| | Frequency Range | 47 ~ 63Hz | | | | |
| | Efficiency (Typ.) | 88% | 88.5% | 90% | 90.5% | 91% |
| | Ac Current (Typ.) | 2.3A/115VAC 1.5A/230VAC | | | | |
| | Inrush Current (Typ.) | COLD START 50A/230VAC | | | | |
| | Leakage Current | <0.75mA / 240VAC | | | | |
| Protection | Over Load | 110 ~ 150% rated output power | | | | |
| | | Protection type : Hiccup mode, recovers automatically after fault condition is removed | | | | |
| Environment | Working Temp. | -20 ~ +70°C (Refer to "Derating Curve") | | | | |
| | Working Humidity | 20 ~ 90% RH non-condensing | | | | |
| | Storage Temp., Humidity | -40 ~ +85°C, 10 ~ 95% RH | | | | |
| | Temp. Coefficient | ±0.03%/°C (0 ~ 50°C) | | | | |
| | Vibration | 10 ~ 500Hz, 5G 10min./1cycle, 60min. each along X, Y, Z axes | | | | |
| Safety & EMC | Standards | EN60950-1, EN60335-1, EN61558-1 | | | | |
| | Withstand Voltage | I/P-O/P:1.5kVAC I/P-FG:1.5kVAC O/P-FG:0.5kVAC | | | | |
| | Isolation Resistance | I/P-O/P, I/P-FG, O/P-FG:100M Ohms / 500VDC / 25°C/ 70% RH | | | | |
| Others | MTBF | 720.6K hrs min. MIL-HDBK-217F (25°C) | | | | |
| | Dimension | 129*97*30mm (L*W*H) | | | | |
| | Weight | 0.34Kg | | | | |

F

## Power Supply

# LRS-150 Switching Power Supply



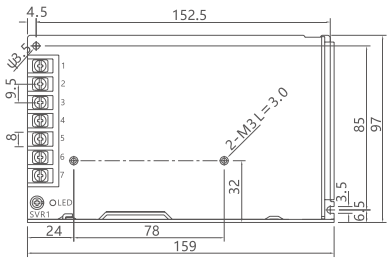


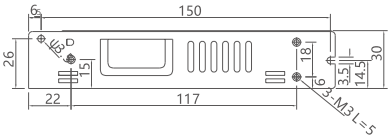


### Technical data

| Model | | LRS-150 -12 | LRS-150-15 | LRS-150-24 | LRS-150-36 | LRS-150-48 |
|---|---|---|---|---|---|---|
| Output | DC Voltage | 12V | 15V | 24V | 36V | 48V |
| | Rated Current | 12.5A | 10A | 6.5A | 4.3A | 3.3A |
| | Current Range | 0 ~ 12.5A | 0 ~ 10A | 0 ~ 6.5A | 0 ~ 4.3A | 0 ~ 3.3A |
| | Rated Power | 150W | 150W | 156W | 154.8W | 158.4W |
| | Ripple & Noise (Max.)Note.2 | 150mVp-p | 150mVp-p | 200mVp-p | 200mVp-p | 200mVp-p |
| | Voltage Adj. Range | 10.2 ~ 13.8V | 13.5 ~ 18V | 21.6 ~ 28.8V | 32.4 ~ 39.6V | 43.2 ~ 52.8V |
| | Voltage Tolerance Note.3 | ±1.0% | ±1.0% | ±1.0% | ±1.0% | ±1.0% |
| | Line Regulation Note.4 | ±0.5% | ±0.5% | ±0.5% | ±0.5% | ±0.5% |
| | Load Regulation Note.5 | ±0.5% | ±0.5% | ±0.5% | ±0.5% | ±0.5% |
| | Setup, Rise Time | 500ms, 30ms/230VAC 500ms,30ms/115VAC at full load | | | | |
| | Hold Up Time (Typ.) | 16ms/230VAC 12ms/115VAC at full load | | | | |
| Input | Voltage Range | 85 ~ 264VAC 120 ~ 370VDC | | | | |
| | Frequency Range | 47 ~ 63Hz | | | | |
| | Efficiency (Typ.) | 87.5% | 89% | 89% | 89% | 90% |
| | Ac Current (Typ.) | 2.8A/115VAC 1.6A/230VAC | | | | |
| | Inrush Current (Typ.) | COLD START 60A/230VAC | | | | |
| | Leakage Current | <0.75mA / 240VAC | | | | |
| Protection | Over Load | 110 ~ 140% rated output power | | | | |
| | | Protection type : Hiccup mode, recovers automatically after fault condition is removed | | | | |
| Environment | Working Temp. | -20 ~ +70°C (Refer to "Derating Curve") | | | | |
| | Working Humidity | 20 ~ 90% RH non-condensing | | | | |
| | Storage Temp., Humidity | -40 ~ +85°C, 10 ~ 95% RH | | | | |
| | Temp. Coefficient | ±0.03%/°C (0 ~ 50°C) | | | | |
| | Vibration | 10 ~ 500Hz, 5G 10min./1cycle, 60min. each along X, Y, Z axes | | | | |
| Safety & EMC | Standards | EN60950-1, EN60335-1, EN61558-1 | | | | |
| | Withstand Voltage | I/P-O/P:1.5kVAC I/P-FG:1.5kVAC O/P-FG:0.5kVAC | | | | |
| | Isolation Resistance | I/P-O/P, I/P-FG, O/P-FG:100M Ohms / 500VDC / 25°C/ 70% RH | | | | |
| Others | MTBF | 648.6K hrs min. MIL-HDBK-217F (25°C) | | | | |
| | Dimension | 159*97*30mm (L*W*H) | | | | |
| | Weight | 0.48Kg | | | | |

F

## Power Supply

# LRS-200 Switching Power Supply



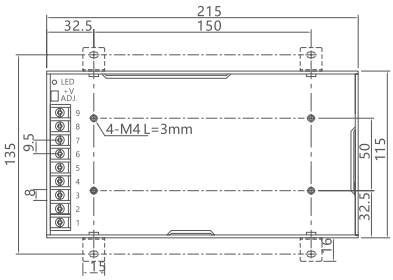


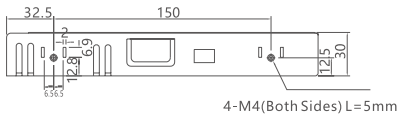


## Technical data

| Model | | LRS-200-12 | LRS-200-15 | LRS-200-24 | LRS-200-36 | LRS-200-48 |
|---|---|---|---|---|---|---|
| Output | DC Voltage | 12V | 15V | 24V | 36V | 48V |
| | Rated Current | 17A | 14A | 8.8A | 5.9A | 4.4A |
| | Current Range | 0 ~ 17A | 0 ~ 14A | 0 ~ 8.8A | 0 ~ 5.9A | 0 ~ 4.4A |
| | Rated Power | 204W | 210W | 211.2W | 212.4W | 211.2W |
| | Ripple & Noise (Max.)Note.2 | 150mVp-p | 150mVp-p | 150mVp-p | 200mVp-p | 200mVp-p |
| | Voltage Adj. Range | 10.2 ~ 13.8V | 13.5 ~ 18V | 21.6 ~ 28.8V | 32.4 ~ 39.6V | 43.2 ~ 52.8V |
| | Voltage Tolerance Note.3 | ±1.5% | ±1.0% | ±1.0% | ±1.0% | ±1.0% |
| | Line Regulation Note.4 | ±0.5% | ±0.5% | ±0.5% | ±0.5% | ±0.5% |
| | Load Regulation Note.5 | ±1.0% | ±0.5% | ±0.5% | ±0.5% | ±0.5% |
| | Setup, Rise Time | 1300ms, 50ms/230VAC 1300ms,50ms/115VAC at full load | | | | |
| | Hold Up Time (Typ.) | 16ms/230VAC 12ms/115VAC at full load | | | | |
| Input | Voltage Range | 90 ~ 132VAC / 180 ~ 264VAC by switch 240 ~ 370VDC (switch on 230VAC) | | | | |
| | Frequency Range | 47 ~ 63Hz | | | | |
| | Efficiency (Typ.) | 87.5% | 88% | 89.5% | 89.5% | 90% |
| | Ac Current (Typ.) | 4A/115VAC 2.2A/230VAC | | | | |
| | Inrush Current (Typ.) | COLD START 60A/115VAC 60A/230VAC | | | | |
| | Leakage Current | <2mA / 240VAC | | | | |
| Protection | Over Load | 110 ~ 140% rated output power | | | | |
| | | Protection type : Hiccup mode, recovers automatically after fault condition is removed | | | | |
| Environment | Working Temp. | -20 ~ +70°C (Refer to "Derating Curve") | | | | |
| | Working Humidity | 20 ~ 90% RH non-condensing | | | | |
| | Storage Temp., Humidity | -40 ~ +85°C, 10 ~ 95% RH | | | | |
| | Temp. Coefficient | ±0.03%/°C (0 ~ 50°C) | | | | |
| | Vibration | 10 ~ 500Hz, 5G 10min./1cycle, 60min. each along X, Y, Z axes | | | | |
| Safety & EMC | Standards | EN60950-1 | | | | |
| | Withstand Voltage | I/P-O/P:1.5kVAC I/P-FG:1.5kVAC O/P-FG:0.5kVAC | | | | |
| | Isolation Resistance | I/P-O/P, I/P-FG, O/P-FG:100M Ohms / 500VDC / 25°C/ 70% RH | | | | |
| Others | MTBF | 347.5K hrs min. MIL-HDBK-217F (25°C) | | | | |
| | Dimension | 215*115*30mm (L*W*H) | | | | |
| | Weight | 0.66Kg | | | | |

F

# LRS-250 Switching Power Supply



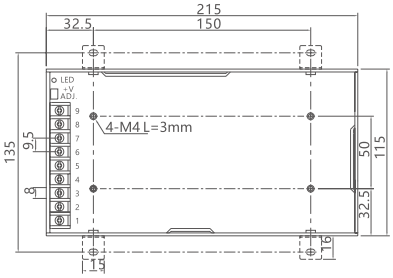


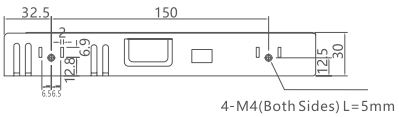


## Technical data

| Model | | LRS-250-12 | LRS-250-15 | LRS-250-24 | LRS-250-36 | LRS-250-48 |
|---|---|---|---|---|---|---|
| Output | DC Voltage | 12V | 15V | 24V | 36V | 48V |
| | Rated Current | 20A | 16A | 10A | 6.7A | 5A |
| | Current Range | 0 ~ 20A | 0 ~ 16A | 0 ~ 10A | 0 ~ 6.7A | 0 ~ 5A |
| | Rated Power | 240W | 240W | 240W | 241.2W | 240W |
| | Ripple & Noise (Max.)Note.2 | 150mVp-p | 150mVp-p | 150mVp-p | 200mVp-p | 200mVp-p |
| | Voltage Adj. Range | 10.2 ~ 13.8V | 13.5 ~ 18V | 21.6 ~ 28.8V | 32.4 ~ 39.6V | 43.2 ~ 52.8V |
| | Voltage Tolerance Note.3 | ±1.5% | ±1.0% | ±1.0% | ±1.0% | ±1.0% |
| | Line Regulation Note.4 | ±0.5% | ±0.5% | ±0.5% | ±0.5% | ±0.5% |
| | Load Regulation Note.5 | ±1.0% | ±0.5% | ±0.5% | ±0.5% | ±0.5% |
| | Setup, Rise Time | 1300ms, 50ms/230VAC 1300ms,50ms/115VAC at full load | | | | |
| | Hold Up Time (Typ.) | 16ms/230VAC 12ms/115VAC at full load | | | | |
| Input | Voltage Range | 90 ~ 132VAC / 180 ~ 264VAC by switch 240 ~ 370VDC (switch on 230VAC) | | | | |
| | Frequency Range | 47 ~ 63Hz | | | | |
| | Efficiency (Typ.) | 87.5% | 88% | 89.5% | 89.5% | 90% |
| | Ac Current (Typ.) | 5.0A/115VAC 2.5A/230VAC | | | | |
| | Inrush Current (Typ.) | COLD START 60A/115VAC 60A/230VAC | | | | |
| | Leakage Current | <2mA / 240VAC | | | | |
| Protection | Over Load | 110 ~ 140% rated output power | | | | |
| | | Protection type : Hiccup mode, recovers automatically after fault condition is removed | | | | |
| Environment | Working Temp. | -20 ~ +70°C (Refer to "Derating Curve") | | | | |
| | Working Humidity | 20 ~ 90% RH non-condensing | | | | |
| | Storage Temp., Humidity | -40 ~ +85°C, 10 ~ 95% RH | | | | |
| | Temp. Coefficient | ±0.03%/°C (0 ~ 50°C) | | | | |
| | Vibration | 10 ~ 500Hz, 5G 10min./1cycle, 60min. each along X, Y, Z axes | | | | |
| Safety & EMC | Standards | EN60950-1 | | | | |
| | Withstand Voltage | I/P-O/P:1.5kVAC I/P-FG:1.5kVAC O/P-FG:0.5kVAC | | | | |
| | Isolation Resistance | I/P-O/P, I/P-FG, O/P-FG:100M Ohms / 500VDC / 25°C/ 70% RH | | | | |
| Others | MTBF | 347.5K hrs min. MIL-HDBK-217F (25°C) | | | | |
| | Dimension | 215*115*30mm (L*W*H) | | | | |
| | Weight | 0.66Kg | | | | |

F

# LRS-350 Switching Power Supply



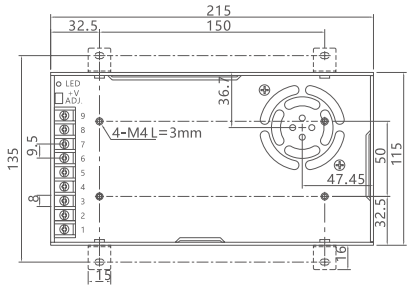


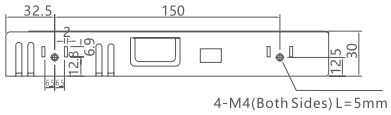


## Technical data

| Model | | LRS-350-12 | LRS-350-15 | LRS-350-24 | LRS-350-36 | LRS-350-48 |
|---|---|---|---|---|---|---|
| Output | DC Voltage | 12V | 15V | 24V | 36V | 48V |
| | Rated Current | 29A | 23.2A | 14.6A | 9.7A | 7.3A |
| | Current Range | 0 ~ 29A | 0 ~ 23.2A | 0 ~ 14.6A | 0 ~ 9.7A | 0 ~ 7.3A |
| | Rated Power | 348W | 348W | 350.4W | 349.2W | 350.4W |
| | Ripple & Noise (Max.)Note.2 | 150mVp-p | 150mVp-p | 150mVp-p | 200mVp-p | 200mVp-p |
| | Voltage Adj. Range | 10.2 ~ 13.8V | 13.5 ~ 18V | 21.6 ~ 28.8V | 32.4 ~ 39.6V | 43.2 ~ 52.8V |
| | Voltage Tolerance Note.3 | ±1.5% | ±1.0% | ±1.0% | ±1.0% | ±1.0% |
| | Line Regulation Note.4 | ±0.5% | ±0.5% | ±0.5% | ±0.5% | ±0.5% |
| | Load Regulation Note.5 | ±1.0% | ±0.5% | ±0.5% | ±0.5% | ±0.5% |
| | Setup, Rise Time | 1300ms, 50ms/230VAC 1300ms,50ms/115VAC at full load | | | | |
| | Hold Up Time (Typ.) | 16ms/230VAC 12ms/115VAC at full load | | | | |
| Input | Voltage Range | 90 ~ 132VAC / 180 ~ 264VAC by switch 240 ~ 370VDC (switch on 230VAC) | | | | |
| | Frequency Range | 47 ~ 63Hz | | | | |
| | Efficiency (Typ.) | 85% | 86% | 88% | 88.5% | 89% |
| | Ac Current (Typ.) | 6.8A/115VAC 3.4A/230VAC | | | | |
| | Inrush Current (Typ.) | 60A/115VAC 60A/230VAC | | | | |
| | Leakage Current | <2mA / 240VAC | | | | |
| Protection | Over Load | 110 ~ 140% rated output power | | | | |
| | | Protection type : Hiccup mode, recovers automatically after fault condition is removed | | | | |
| Function | Fan On/Off Control | RTH3 ≧ 50°C FAN ON, ≧ 40°C FAN OFF | | | | |
| Environment | Working Temp. | -20 ~ +70°C (Refer to "Derating Curve") | | | | |
| | Working Humidity | 20 ~ 90% RH non-condensing | | | | |
| | Storage Temp., Humidity | -40 ~ +85°C, 10 ~ 95% RH | | | | |
| | Temp. Coefficient | ±0.03%/°C (0 ~ 50°C) | | | | |
| | Vibration | 10 ~ 500Hz, 5G 10min./1cycle, 60min. each along X, Y, Z axes | | | | |
| Safety & EMC | Standards | EN60950-1 | | | | |
| | Withstand Voltage | I/P-O/P:1.5kVAC I/P-FG:1.5kVAC O/P-FG:0.5kVAC | | | | |
| | Isolation Resistance | I/P-O/P, I/P-FG, O/P-FG:100M Ohms/500VDC / 25°C/ 70% RH | | | | |
| Others | MTBF | 327.9K hrs min. MIL-HDBK-217F (25°C) | | | | |
| | Dimension | 215*115*30mm (L*W*H) | | | | |
| | Weight | 0.76Kg | | | | |

F

## Power Supply

# LRS-400 Switching Power Supply



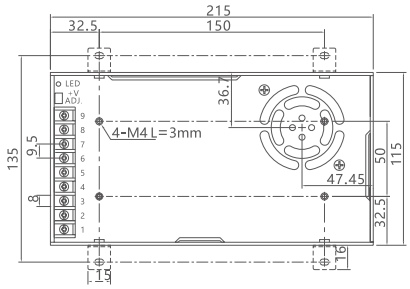


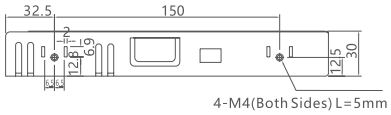


## Technical data

| Model | | LRS-400-12 | LRS-400-15 | LRS-400-24 | LRS-400-36 | LRS-400-48 |
|---|---|---|---|---|---|---|
| Output | DC Voltage | 12V | 15V | 24V | 36V | 48V |
| | Rated Current | 33A | 26.6A | 16.5A | 11A | 8.3A |
| | Current Range | 0 ~ 33A | 0 ~ 26.6A | 0 ~ 16.5A | 0 ~ 11A | 0 ~ 8.3A |
| | Rated Power | 396W | 399W | 396W | 396W | 398.4W |
| | Ripple & Noise (Max.)Note.2 | 150mVp-p | 150mVp-p | 150mVp-p | 200mVp-p | 200mVp-p |
| | Voltage Adj. Range | 10.2 ~ 13.8V | 13.5 ~ 18V | 21.6 ~ 28.8V | 32.4 ~ 39.6V | 43.2 ~ 52.8V |
| | Voltage Tolerance Note.3 | ±1.5% | ±1.0% | ±1.0% | ±1.0% | ±1.0% |
| | Line Regulation Note.4 | ±0.5% | ±0.5% | ±0.5% | ±0.5% | ±0.5% |
| | Load Regulation Note.5 | ±1.0% | ±0.5% | ±0.5% | ±0.5% | ±0.5% |
| | Setup, Rise Time | 1300ms, 50ms/230VAC 1300ms,50ms/115VAC at full load | | | | |
| | Hold Up Time (Typ.) | 16ms/230VAC 12ms/115VAC at full load | | | | |
| Input | Voltage Range | 90 ~ 132VAC / 180 ~ 264VAC by switch 240 ~ 370VDC (switch on 230VAC) | | | | |
| | Frequency Range | 47 ~ 63Hz | | | | |
| | Efficiency (Typ.) | 85% | 86% | 88% | 88.5% | 89% |
| | Ac Current (Typ.) | 6.8A/115VAC 3.4A/230VAC | | | | |
| | Inrush Current (Typ.) | 60A/115VAC 60A/230VAC | | | | |
| | Leakage Current | <2mA / 240VAC | | | | |
| Protection | Over Load | 110 ~ 140% rated output power | | | | |
| | | Protection type : Hiccup mode, recovers automatically after fault condition is removed | | | | |
| Function | Fan On/Off Control | RTH3 ≦ 50°C FAN ON, ≦ 40°C FAN OFF | | | | |
| Environment | Working Temp. | -20 ~ +70°C (Refer to "Derating Curve") | | | | |
| | Working Humidity | 20 ~ 90% RH non-condensing | | | | |
| | Storage Temp., Humidity | -40 ~ +85°C, 10 ~ 95% RH | | | | |
| | Temp. Coefficient | ±0.03%/°C (0 ~ 50°C) | | | | |
| | Vibration | 10 ~ 500Hz, 5G 10min./1cycle, 60min. each along X, Y, Z axes | | | | |
| Safety & EMC | Standards | EN60950-1 approved | | | | |
| | Withstand Voltage | I/P-O/P:1.5kVAC I/P-FG:1.5kVAC O/P-FG:0.5kVAC | | | | |
| | Isolation Resistance | I/P-O/P, I/P-FG, O/P-FG:100M Ohms/500VDC / 25°C/ 70% RH | | | | |
| Others | MTBF | 327.9K hrs min. MIL-HDBK-217F (25°C) | | | | |
| | Dimension | 215*115*30mm (L*W*H) | | | | |
| | Weight | 0.76Kg | | | | |

F

# MSF-10W, MSF-20W Switching Power Supply




MSF-10W

## MSF-10W

Single output: power 10W
Input voltage: 85~264VAC 120~370VDC

### Technical data

| Specification \ Model | MSF-10-5 | MSF-10-12 | MSF-10-15 | MSF-10-24 |
|---|---|---|---|---|
| DC output voltage, current | 5V 0~2A | 12V 0~1A | 15V 0~0.8A | 24V 0~0.5A |
| Wave and noise | 50mVp-p | 50mVp-p | 50mVp-p | 50mVp-p |
| Inlet wire stability | ±0.5% | ±0.5% | ±0.5% | ±0.5% |
| Load stability | ±1% | ±0.5% | ±0.5% | ±0.5% |
| Efficiency | 68% | 71% | 72% | 75% |
| Adjustable range for DC voltage | ±10% | ±10% | ±10% | ±10% |
| Input voltage range | 85~264VAC 120~370VDC 47~63Hz | | | |
| Impact current | Cold start current 30A/230VAC | | | |
| Overload protection | 105%~135% cut off the output, automatic recovery | | | |
| Over voltage protection | | | | |
| Setup, rise, hold up time | 200ms, 50ms, 20ms/230VAC at full load | | | |
| Withstand voltage | I/P-O/P: 1.5kV I/P-FG: 1.5kV O/P-FG: 0.5kV 1minute | | | |
| Isolation resistance | I/P-O/P I/P-FG O/P-F/G: 500VDC/100MΩ | | | |
| Working temperature | -10°C~+50°C | | | |
| Dimension | 78×48×21mm | | | |

F




MSF-20W

## MSF-20W

Single output: power 20W
Input voltage: 85~264VAC 120~370VDC

### Technical data

| Specification \ Model | MSF-20-5 | MSF-20-12 | MSF-20-15 | MSF-20-24 |
|---|---|---|---|---|
| DC output voltage, current | 5V 0~4A | 12V 0~2A | 15V 0~1.6A | 24V 0~1A |
| Wave and noise | 50mVp-p | 50mVp-p | 50mVp-p | 50mVp-p |
| Inlet wire stability | ±0.5% | ±0.5% | ±0.5% | ±0.5% |
| Load stability | ±1% | ±0.5% | ±0.5% | ±0.5% |
| Efficiency | 68% | 71% | 72% | 75% |
| Adjustable range for DC voltage | ±10% | ±10% | ±10% | ±10% |
| Input voltage range | 85~264VAC 120~370VDC 47~63Hz | | | |
| Impact current | Cold start current 30A/230VAC | | | |
| Overload protection | 105%~135% cut off the output, automatic recovery | | | |
| Over voltage protection | | | | |
| Setup, rise, hold up time | 200ms, 50ms, 20ms/230VAC at full load | | | |
| Withstand voltage | I/P-O/P: 1.5kV I/P-FG: 1.5kV O/P-FG: 0.5kV 1minute | | | |
| Isolation resistance | I/P-O/P I/P-FG O/P-F/G: 500VDC/100MΩ | | | |
| Working temperature | -10°C~+50°C | | | |
| Dimension | 97×58×25mm | | | |

# MS-15W, S-15W Switching Power Supply



MS-15W

## MS-15W

Single output: power 15W
Input voltage: 85~264VAC 120~370VDC

### Technical data

| Specification \ Model | MS-15-5 | MS-15-12 | MS-15-15 | MS-15-24 |
|---|---|---|---|---|
| DC output voltage, current | 5V 0~3A | 12V 0~1.3A | 15V 0~1A | 24V 0~0.7A |
| Wave and noise | 60mVp-p | 80mVp-p | 100mVp-p | 100mVp-p |
| Inlet wire stability | ±0.5% | ±0.5% | ±0.5% | ±0.5% |
| Load stability | ±0.5% | ±0.5% | ±0.5% | ±0.5% |
| Efficiency | 68% | 71% | 72% | 75% |
| Adjustable range for DC voltage | ±10% | ±10% | ±10% | ±10% |
| Input voltage range | 85~264VAC 120~370VDC 47~63Hz | | | |
| Impact current | Cold start current 30A/230VAC | | | |
| Overload protection | 105%~135% cut off the output, automatic recovery | | | |
| Over voltage protection | | | | |
| Setup, rise, hold up time | 200ms, 50ms, 20ms/230VAC at full load | | | |
| Withstand voltage | I/P-O/P: 1.5kV I/P-FG: 1.5kV O/P-FG: 0.5kV 1minute | | | |
| Isolation resistance | I/P-O/P I/P-FG O/P-F/G: 500VDC/100MΩ | | | |
| Working temperature | -10°C~+50°C | | | |
| Dimension | 84×58×38mm | | | |

F



S-15W

## S-15W

Single output: power 15W
Input voltage: 90~132VAC/180~264VAC by switch

### Technical data

| Specification \ Model | S-15-5 | S-15-12 | S-15-15 | S-15-24 |
|---|---|---|---|---|
| DC output voltage, current | 5V 0~3A | 12V 0~1.3A | 15V 0~1A | 24V 0~0.7A |
| Wave and noise | 60mVp-p | 80mVp-p | 100mVp-p | 100mVp-p |
| Inlet wire stability | ±0.5% | ±0.5% | ±0.5% | ±0.5% |
| Load stability | ±0.5% | ±0.5% | ±0.5% | ±0.5% |
| Efficiency | 68% | 71% | 72% | 75% |
| Adjustable range for DC voltage | ±10% | ±10% | ±10% | ±10% |
| Input voltage range | 90~132VAC/180~264VAC by switch 254~370VDC 47~63Hz | | | |
| Impact current | Cold start current 30A/230VAC | | | |
| Overload protection | 105%~135% cut off the output, automatic recovery | | | |
| Over voltage protection | | | | |
| Setup, rise, hold up time | 200ms, 50ms, 20ms/230VAC at full load | | | |
| Withstand voltage | I/P-O/P: 1.5kV I/P-FG: 1.5kV O/P-FG: 0.5kV 1minute | | | |
| Isolation resistance | I/P-O/P I/P-FG O/P-F/G: 500VDC/100MΩ | | | |
| Working temperature | -10°C~+50°C | | | |
| Dimension | 98×97×35mm | | | |

# MS-25W, S-25W Switching Power Supply



MS-25W

## MS-25W

Single output: power 25W
Input voltage: 85~264VAC 120~370VDC

### Technical data

| Specification \ Model | MS-25-5 | MS-25-12 | MS-25-15 | MS-25-24 |
|---|---|---|---|---|
| DC output voltage, current | 5V 0~5A | 12V 0~1.3A | 15V 0~1A | 24V 0~0.7A |
| Wave and noise | 60mVp-p | 80mVp-p | 100mVp-p | 100mVp-p |
| Inlet wire stability | ±0.5% | ±0.5% | ±0.5% | ±0.5% |
| Load stability | ±0.5% | ±0.5% | ±0.5% | ±0.5% |
| Efficiency | 70% | 75% | 76% | 78% |
| Adjustable range for DC voltage | ±10% | ±10% | ±10% | ±10% |
| Input voltage range | 85~264VAC 120~370VDC 47~63Hz | | | |
| Impact current | Cold start current 30A/230VAC | | | |
| Overload protection | 105%~135% cut off the output, automatic recovery | | | |
| Over voltage protection | | | | |
| Setup, rise, hold up time | 200ms, 50ms, 20ms/230VAC at full load | | | |
| Withstand voltage | I/P-O/P: 1.5kV I/P-FG: 1.5kV O/P-FG: 0.5kV 1minute | | | |
| Isolation resistance | I/P-O/P I/P-FG O/P-F/G: 500VDC/100MΩ | | | |
| Working temperature | -10°C~+50°C | | | |
| Dimension | 84×58×38mm | | | |

F



S-25W

## S-25W

Single output: power 25W
Input voltage: 90~132VAC/180~264VAC by switch

### Technical data

| Specification \ Model | S-25-5 | S-25-12 | S-25-15 | S-25-24 |
|---|---|---|---|---|
| DC output voltage, current | 5V 0~3A | 12V 0~1.3A | 15V 0~1A | 24V 0~0.7A |
| Wave and noise | 60mVp-p | 80mVp-p | 100mVp-p | 100mVp-p |
| Inlet wire stability | ±0.5% | ±0.5% | ±0.5% | ±0.5% |
| Load stability | ±0.5% | ±0.5% | ±0.5% | ±0.5% |
| Efficiency | 68% | 71% | 72% | 75% |
| Adjustable range for DC voltage | ±10% | ±10% | ±10% | ±10% |
| Input voltage range | 90~132VAC/180~264VAC by switch 254~370VDC 47~63Hz | | | |
| Impact current | Cold start current 30A/230VAC | | | |
| Overload protection | 105%~150% cut off the output, automatic recovery | | | |
| Over voltage protection | | | | |
| Setup, rise, hold up time | 200ms, 50ms, 20ms/230VAC at full load | | | |
| Withstand voltage | I/P-O/P: 1.5kV I/P-FG: 1.5kV O/P-FG: 0.5kV 1minute | | | |
| Isolation resistance | I/P-O/P I/P-FG O/P-F/G: 500VDC/100MΩ | | | |
| Working temperature | -10°C~+50°C | | | |
| Dimension | 98×97×35mm | | | |

# MS-35W, S-35W Switching Power Supply



MS-35W

## MS-35W

Single output: power 35W
Input voltage: 180~264VAC 120~370VDC

### Technical data

| Specification \ Model | MS-35-5 | MS-35-12 | MS-35-15 | MS-35-24 |
|---|---|---|---|---|
| DC output voltage, current | 5V 0~6A | 12V 0~3A | 15V 0~2.4A | 24V 0~1.5A |
| Wave and noise | 60mVp-p | 80mVp-p | 100mVp-p | 100mVp-p |
| Inlet wire stability | ±1% | ±0.5% | ±0.5% | ±0.5% |
| Load stability | ±1% | ±0.5% | ±0.5% | ±0.5% |
| Efficiency | 77% | 81% | 83% | 84% |
| Adjustable range for DC voltage | ±10% | ±10% | ±10% | ±10% |
| Input voltage range | 85~264VAC 120~370VDC 47~63Hz | | | |
| Impact current | Cold start current 30A/230VAC | | | |
| Overload protection | 105%~150% cut off the output, automatic recovery | | | |
| Over voltage protection | 115%~135% shut down O/P voltage, re-power on to recover | | | |
| Setup, rise, hold up time | 300ms, 50ms, 80ms/230VAC at full load | | | |
| Withstand voltage | I/P-O/P: 1.5kV I/P-FG: 1.5kV O/P-FG: 0.5kV 1minute | | | |
| Isolation resistance | I/P-O/P I/P-FG O/P-F/G: 500VDC/100MΩ | | | |
| Working temperature | -10°C~+50°C | | | |
| Dimension | 84×58×38mm | | | |



S-35W

## S-15W

Single output: power 15W
Input voltage: 90~132VAC/180~264VAC by switch

### Technical data

| Specification \ Model | S-15-5 | S-15-12 | S-15-15 | S-15-24 |
|---|---|---|---|---|
| DC output voltage, current | 5V 0~3A | 12V 0~1.3A | 15V 0~1A | 24V 0~0.7A |
| Wave and noise | 60mVp-p | 80mVp-p | 100mVp-p | 100mVp-p |
| Inlet wire stability | ±0.5% | ±0.5% | ±0.5% | ±0.5% |
| Load stability | ±0.5% | ±0.5% | ±0.5% | ±0.5% |
| Efficiency | 68% | 71% | 72% | 75% |
| Adjustable range for DC voltage | ±10% | ±10% | ±10% | ±10% |
| Input voltage range | 90~132VAC/180~264VAC by switch 254~370VDC 47~63Hz | | | |
| Impact current | Cold start current 30A/230VAC | | | |
| Overload protection | 105%~135% cut off the output, automatic recovery | | | |
| Over voltage protection | | | | |
| Setup, rise, hold up time | 200ms, 50ms, 20ms/230VAC at full load | | | |
| Withstand voltage | I/P-O/P: 1.5kV I/P-FG: 1.5kV O/P-FG: 0.5kV 1minute | | | |
| Isolation resistance | I/P-O/P I/P-FG O/P-F/G: 500VDC/100MΩ | | | |
| Working temperature | -10°C~+50°C | | | |
| Dimension | 98×97×35mm | | | |

# MS-50W, S-50W Switching Power Supply



MS-50W

## MS-50W

Single output: power 50W
Input voltage: 85~264VAC 120~370VD

### Technical data

| Specification \ Model | MS-50-5 | MS-50-12 | MS-50-15 | MS-50-24 |
|---|---|---|---|---|
| DC output voltage, current | 5V 0~10A | 12V 0~4.2A | 15V 0~3.4A | 24V 0~2.1A |
| Wave and noise | 75mVp-p | 100mVp-p | 100mVp-p | 100mVp-p |
| Inlet wire stability | ±0.5% | ±0.5% | ±0.5% | ±0.5% |
| Load stability | ±1% | ±0.5% | ±0.5% | ±0.5% |
| Efficiency | 80% | 82% | 82% | 84% |
| Adjustable range for DC voltage | ±10% | ±10% | ±10% | ±10% |
| Input voltage range | 85~264VAC 120~370VDC 47~63Hz | | | |
| Impact current | Cold start current 18A/115VAC 36A/230VAC | | | |
| Overload protection | 105%~150% cut off the output, automatic recovery | | | |
| Over voltage protection | 115%~135% shut down O/P voltage, re-power on to recover | | | |
| Setup, rise, hold up time | 300ms, 50ms, 60ms/230VAC at full load | | | |
| Withstand voltage | I/P-O/P: 1.5kV I/P-FG: 1.5kV O/P-FG: 0.5kV 1minute | | | |
| Isolation resistance | I/P-O/P I/P-FG O/P-F/G: 500VDC/100MΩ | | | |
| Working temperature | -10°C~+50°C | | | |
| Dimension | 111×78×36mm | | | |



S-50W

## S-50W

Single output: power 50W
Input voltage: 90~132VAC/180~264VAC by switc

### Technical data

| Specification \ Model | S-50-5 | S-50-12 | S-50-15 | S-50-24 |
|---|---|---|---|---|
| DC output voltage, current | 5V 0~10A | 12V 0~4.2A | 15V 0~3.4A | 24V 0~2.1A |
| Wave and noise | 75mVp-p | 100mVp-p | 100mVp-p | 100mVp-p |
| Inlet wire stability | ±0.5% | ±0.5% | ±0.5% | ±0.5% |
| Load stability | ±1% | ±0.5% | ±0.5% | ±0.5% |
| Efficiency | 71% | 78% | 78% | 82% |
| Adjustable range for DC voltage | ±10% | ±10% | ±10% | ±10% |
| Input voltage range | 90~132VAC/180~264VAC by switch 254~370VDC 47~63Hz | | | |
| Impact current | Cold start current 30A/230VAC | | | |
| Overload protection | 105%~150% cut off the output, automatic recovery | | | |
| Over voltage protection | | | | |
| Setup, rise, hold up time | 200ms, 100ms, 20ms/230VAC at full load | | | |
| Withstand voltage | I/P-O/P: 1.5kV I/P-FG: 1.5kV O/P-FG: 0.5kV 1minute | | | |
| Isolation resistance | I/P-O/P I/P-FG O/P-F/G: 500VDC/100MΩ | | | |
| Working temperature | -10°C~+50°C | | | |
| Dimension | 159×98×38mm | | | |

F

# MS-60W, S-60W Switching Power Supply



MS-60W

## MS-60W

Single output: power 60W
Input voltage: 85~264VAC 120~370VDC

### Technical data

| Specification \ Model | MS-60-5 | MS-60-12 | MS-60-15 | MS-60-24 |
|---|---|---|---|---|
| DC output voltage, current | 5V 0~12A | 12V 0~5A | 15V 0~4A | 24V 0~2.5A |
| Wave and noise | 75mVp-p | 100mVp-p | 100mVp-p | 100mVp-p |
| Inlet wire stability | ±0.5% | ±0.5% | ±0.5% | ±0.5% |
| Load stability | ±1% | ±0.5% | ±0.5% | ±0.5% |
| Efficiency | 80% | 82% | 82% | 84% |
| Adjustable range for DC voltage | ±10% | ±10% | ±10% | ±10% |
| Input voltage range | 85~264VAC 120~370VDC 47~63Hz | | | |
| Impact current | Cold start current 15A/115VAC 30A/230VAC | | | |
| Overload protection | 105%~150% cut off the output, automatic recovery | | | |
| Over voltage protection | | | | |
| Setup, rise, hold up time | 200ms, 100ms, 20ms/230VAC at full load | | | |
| Withstand voltage | I/P-O/P: 1.5kV I/P-FG: 1.5kV O/P-FG: 0.5kV 1minute | | | |
| Isolation resistance | I/P-O/P I/P-FG O/P-F/G: 500VDC/100MΩ | | | |
| Working temperature | -10°C~+50°C | | | |
| Dimension | 111×78×36mm | | | |



S-60W

## S-50W

Single output: power 60W
Input voltage: 90~132VAC/180~264VAC by switch

### Technical data

| Specification \ Model | S-60-5 | S-60-12 | S-60-15 | S-60-24 |
|---|---|---|---|---|
| DC output voltage, current | 5V 0~12A | 12V 0~5A | 15V 0~4A | 24V 0~2.5A |
| Wave and noise | 75mVp-p | 100mVp-p | 100mVp-p | 100mVp-p |
| Inlet wire stability | ±0.5% | ±0.5% | ±0.5% | ±0.5% |
| Load stability | ±1% | ±0.5% | ±0.5% | ±0.5% |
| Efficiency | 72% | 78% | 79% | 82% |
| Adjustable range for DC voltage | ±10% | ±10% | ±10% | ±10% |
| Input voltage range | 90~132VAC/180~264VAC by switch 254~370VDC 47~63Hz | | | |
| Impact current | Cold start current 15A/115VAC 30A/230VAC | | | |
| Overload protection | 105%~150% cut off the output, automatic recovery | | | |
| Over voltage protection | | | | |
| Setup, rise, hold up time | 200ms, 100ms, 20ms/230VAC at full load | | | |
| Withstand voltage | I/P-O/P: 1.5kV I/P-FG: 1.5kV O/P-FG: 0.5kV 1minute | | | |
| Isolation resistance | I/P-O/P I/P-FG O/P-F/G: 500VDC/100MΩ | | | |
| Working temperature | -10°C~+50°C | | | |
| Dimension | 159×98×38mm | | | |

# S-75W, MS-100W Switching Power Supply



S-75W

## S-75W

Single output: power 75W
Input voltage: 90~132VAC/180~264VAC by switch

### Technical data

| Model / Specification | S-75-15 | S-75-24 |
|---|---|---|
| DC output voltage, current | 15V 0~5A | 24V 0~3.2A |
| Wave and noise | 100mVp-p | 120mVp-p |
| Inlet wire stability | ±0.5% | ±0.5% |
| Load stability | ±0.5% | ±0.5% |
| Efficiency | 79% | 82% |
| Adjustable range for DC voltage | ±10% | ±10% |
| Input voltage range | 90~132VAC/180~264VAC by switch 254~370VDC 47~63Hz | |
| Impact current | Cold start current 15A/115VAC 30A/230VAC | |
| Overload protection | 105%~150% cut off the output, automatic recovery | |
| Over voltage protection | | |
| Setup, rise, hold up time | 200ms, 50ms, 20ms/230VAC at full load | |
| Withstand voltage | I/P-O/P: 1.5kV I/P-FG: 1.5kV O/P-FG: 0.5kV 1minute | |
| Isolation resistance | I/P-O/P I/P-FG O/P-F/G: 500VDC/100MΩ | |
| Working temperature | -10°C~+50°C | |
| Dimension | 159×98×38mm | |

F



MS-100W

## MS-100W

Single output: power 100W
Input voltage: 90~132VAC/180~264VAC by switch

### Technical data

| Model / Specification | MS-100-5 | MS-100-12 | MS-100-15 | MS-100-24 |
|---|---|---|---|---|
| DC output voltage, current | 5V 0~20A | 12V 0~8.5A | 15V 0~7A | 24V 0~4.5A |
| Wave and noise | 100mVp-p | 120mVp-p | 120mVp-p | 150mVp-p |
| Inlet wire stability | ±0.5% | ±0.5% | ±0.5% | ±0.5% |
| Load stability | ±0.5% | ±0.5% | ±0.5% | ±0.5% |
| Efficiency | 80% | 83% | 84% | 86% |
| Adjustable range for DC voltage | ±10% | ±10% | ±10% | ±10% |
| Input voltage range | 90~132VAC/180~264VAC by switch 254~370VDC 47~63Hz | | | |
| Impact current | Cold start current 15A/115VAC 30A/230VAC | | | |
| Overload protection | 105%~150% cut off the output, automatic recovery | | | |
| Over voltage protection | 115%~135% shut down O/P voltage, re-power on to recover | | | |
| Setup, rise, hold up time | 200ms, 50ms, 20ms/230VAC at full load | | | |
| Withstand voltage | I/P-O/P: 1.5kV I/P-FG: 1.5kV O/P-FG: 0.5kV 1minute | | | |
| Isolation resistance | I/P-O/P I/P-FG O/P-F/G: 500VDC/100MΩ | | | |
| Working temperature | -10°C~+50°C | | | |
| Dimension | 159×98×38mm | | | |

# S-100W, S-120W Switching Power Supply



S-100W

## S-100W

Single output: power 100W
Input voltage: 90~132VAC/180~264VAC by switch

### Technical data

| Specification \ Model | S-100-5 | S-100-12 | S-100-18 | S-100-24 | S-100-36 | S-100-48 |
|---|---|---|---|---|---|---|
| DC output voltage, current | 5V 0~20A | 12V 0~8.5A | 12V 0~8.5A | 12V 0~8.5A | 18V 0~5.5A | 24V 0~1.5A |
| Wave and noise | 75mVp-p | 100mVp-p | 100mVp-p | 100mVp-p | 100mVp-p | 100mVp-p |
| Inlet wire stability | ±0.5% | ±0.3% | ±0.3% | ±0.3% | ±0.2% | ±0.5% |
| Load stability | ±0.5% | ±0.3% | ±0.3% | ±0.3% | ±0.2% | ±0.5% |
| Efficiency | 78% | 81% | 81% | 81% | 84% | 84% |
| Adjustable range for DC voltage | ±10% | ±10% | ±10% | ±10% | ±10% | ±10% |
| Input voltage range | 90~132VAC/180~264VAC by switch 254~370VDC 47~63Hz | | | | | |
| Impact current | Cold start current 30A/115VAC 60A/230VAC | | | | | |
| Overload protection | 105%~150% cut off the output, automatic recovery | | | | | |
| Over voltage protection | | | | | | |
| Setup, rise, hold up time | 200ms, 50ms, 20ms/230VAC at full load | | | | | |
| Withstand voltage | I/P-O/P: 1.5kV I/P-FG: 1.5kV O/P-FG: 0.5kV 1minute | | | | | |
| Isolation resistance | I/P-O/P I/P-FG O/P-F/G: 500VDC/100MΩ | | | | | |
| Working temperature | -10°C~+50°C | | | | | |
| Dimension | 199×98×38mm | | | | | |



S-120W

## S-120W

Single output: power 120W
Input voltage: 90~132VAC/180~264VAC by switch

### Technical data

| Specification \ Model | S-120-12 | S-120-15 | S-120-18 | S-120-24 | S-120-36 | S-120-48 |
|---|---|---|---|---|---|---|
| DC output voltage, current | 12V 0~10A | 15V 0~8A | 18V 0~6.7A | 24V 0~5A | 36V 0~3.3A | 48V 0~2.1A |
| Wave and noise | 100mVp-p | 100mVp-p | 100mVp-p | 100mVp-p | 100mVp-p | 100mVp-p |
| Inlet wire stability | ±0.3% | ±0.3% | ±0.2% | ±0.2% | ±0.2% | ±0.2% |
| Load stability | ±0.3% | ±0.3% | ±0.2% | ±0.2% | ±0.2% | ±0.2% |
| Efficiency | 81% | 82% | 84% | 84% | 84% | 84% |
| Adjustable range for DC voltage | ±10% | ±10% | ±10% | ±10% | ±10% | ±10% |
| Input voltage range | 90~132VAC/180~264VAC by switch 254~370VDC 47~63Hz | | | | | |
| Impact current | Cold start current 30A/115VAC 60A/230VAC | | | | | |
| Overload protection | 105%~150% cut off the output, automatic recovery | | | | | |
| Over voltage protection | 115%~135% shut down O/P voltage, re-power on to recover | | | | | |
| Setup, rise, hold up time | 200ms, 50ms, 20ms/230VAC at full load | | | | | |
| Withstand voltage | I/P-O/P: 1.5kV I/P-FG: 1.5kV O/P-FG: 0.5kV 1minute | | | | | |
| Isolation resistance | I/P-O/P I/P-FG O/P-F/G: 500VDC/100MΩ | | | | | |
| Working temperature | -10°C~+50°C | | | | | |
| Dimension | 199×98×38mm | | | | | |

# S-145W, MS-150W Switching Power Supply



S-145W

## S-145W

Single output: power 145W
Input voltage: 90~132VAC/180~264VAC by switch

### Technical data

| Specification \ Model | S-145-5 | S-145-12 | S-145-18 | S-145-24 | S-145-36 | S-145-48 |
|---|---|---|---|---|---|---|
| DC output voltage, current | 5V 0~25A | 12V 0~12A | 18V 0~8A | 24V 0~6A | 36V 0~4A | 48V 0~3A |
| Wave and noise | 100mVp-p | 100mVp-p | 100mVp-p | 100mVp-p | 100mVp-p | 100mVp-p |
| Inlet wire stability | ±0.5% | ±0.3% | ±0.3% | ±0.2% | ±0.2% | ±0.2% |
| Load stability | ±0.5% | ±0.3% | ±0.3% | ±0.2% | ±0.2% | ±0.2% |
| Efficiency | 70% | 80.5% | 80.5% | 83.5% | 83.5% | 83.5% |
| Adjustable range for DC voltage | ±10% | ±10% | ±10% | ±10% | ±10% | ±10% |
| Input voltage range | 90~132VAC/180~264VAC by switch 254~370VDC 47~63Hz | | | | | |
| Impact current | Cold start current 35A/115VAC 60A/230VAC | | | | | |
| Overload protection | 105%~150% cut off the output, automatic recovery | | | | | |
| Over voltage protection | 115%~150% shut down O/P voltage, re-power on to recover | | | | | |
| Setup, rise, hold up time | 100ms, 50ms, 20ms/230VAC at full load | | | | | |
| Withstand voltage | I/P-O/P: 1.5kV I/P-FG: 1.5kV O/P-FG: 0.5kV 1minute | | | | | |
| Isolation resistance | I/P-O/P I/P-FG O/P-F/G: 500VDC/100MΩ | | | | | |
| Working temperature | -10°C~+50°C | | | | | |
| Dimension | 199×98×38mm | | | | | |



MS-150W

## MS-1150W

Single output: power 150W
Input voltage: 90~132VAC/180~264VAC by switch

### Technical data

| Specification \ Model | MS-150-12 | MS-150-15 | MS-150-24 | MS-150-36 | MS-150-48 |
|---|---|---|---|---|---|
| DC output voltage, current | 12V 0~12.5A | 15V 0~10A | 24V 0~6.5A | 36V 0~4.2A | 48V 0~3.1A |
| Wave and noise | 100mVp-p | 100mVp-p | 100mVp-p | 100mVp-p | 100mVp-p |
| Inlet wire stability | ±0.5% | ±0.5% | ±0.5% | ±0.5% | ±0.5% |
| Load stability | ±0.5% | ±0.5% | ±0.5% | ±0.5% | ±0.5% |
| Efficiency | 83% | 84% | 86% | 86% | 86% |
| Adjustable range for DC voltage | ±10% | ±10% | ±10% | ±10% | ±10% |
| Input voltage range | 90~132VAC/180~264VAC by switch 254~370VDC 47~63Hz | | | | |
| Impact current | Cold start current 15A/115VAC 30A/230VAC | | | | |
| Overload protection | 105%~150% cut off the output, automatic recovery | | | | |
| Over voltage protection | | | | | |
| Setup, rise, hold up time | 200ms, 50ms, 20ms/230VAC at full load | | | | |
| Withstand voltage | I/P-O/P: 1.5kV I/P-FG: 1.5kV O/P-FG: 0.5kV 1minute | | | | |
| Isolation resistance | I/P-O/P I/P-FG O/P-F/G: 500VDC/100MΩ | | | | |
| Working temperature | -10°C~+50°C | | | | |
| Dimension | 159×98×38mm | | | | |

# S-150W, S-200W Switching Power Supply



S-150W

## S-150W

Single output: power 150W
Input voltage: 90~132VAC/180~264VAC by switch

### Technical data

| Specification \ Model | S-150-5 | S-150-12 | S-150-15 | S-150-24 | S-150-36 | S-150-48 |
|---|---|---|---|---|---|---|
| DC output voltage, current | 5V 0~30A | 12V 0~12.5A | 15V 0~10A | 24V 0~6.5A | 36V 0~4.1A | 48V 0~3.1A |
| Wave and noise | 150mVp-p | 180mVp-p | 180mVp-p | 240mVp-p | 240mVp-p | 240mVp-p |
| Inlet wire stability | ±0.5% | ±0.3% | ±0.3% | ±0.2% | ±0.2% | ±0.2% |
| Load stability | ±0.8% | ±0.3% | ±0.3% | ±0.2% | ±0.2% | ±0.2% |
| Efficiency | 78% | 82% | 84% | 85% | 86% | 87% |
| Adjustable range for DC voltage | ±10% | ±10% | ±10% | ±10% | ±10% | ±10% |
| Input voltage range | 90~132VAC/180~264VAC by switch 254~370VDC 47~63Hz | | | | | |
| Impact current | Cold start current 35A/115VAC 60A/230VAC | | | | | |
| Overload protection | 105%~150% cut off the output, automatic recovery | | | | | |
| Over voltage protection | 115%~135% shut down O/P voltage, re-power on to recover | | | | | |
| Setup, rise, hold up time | 100ms, 50ms, 20ms/230VAC at full load | | | | | |
| Withstand voltage | I/P-O/P: 1.5kV I/P-FG: 1.5kV O/P-FG: 0.5kV 1minute | | | | | |
| Isolation resistance | I/P-O/P I/P-FG O/P-F/G: 500VDC/100MΩ | | | | | |
| Working temperature | -10°C~+50°C | | | | | |
| Dimension | 199×110×50mm | | | | | |



S-200W

## S-200W

Single output: power 200W
Input voltage: 180~264VAC by switch

### Technical data

| Specification \ Model | S-200-5 | S-200-15 | S-200-18 | S-200-24 | S-200-36 | S-200-48 |
|---|---|---|---|---|---|---|
| DC output voltage, current | 5V 0~40A | 12V 0~16A | 15V 0~13A | 24V 0~8.5A | 36V 0~5.5A | 48V 0~4.2A |
| Wave and noise | 150mVp-p | 180mVp-p | 180mVp-p | 240mVp-p | 240mVp-p | 240mVp-p |
| Inlet wire stability | ±0.5% | ±0.5% | ±0.5% | ±0.5% | ±0.5% | ±0.5% |
| Load stability | ±1% | ±0.5% | ±0.5% | ±0.5% | ±0.5% | ±0.5% |
| Efficiency | 79% | 82% | 83% | 83% | 86% | 86% |
| Adjustable range for DC voltage | ±10% | ±10% | ±10% | ±10% | ±10% | ±10% |
| Input voltage range | 90~132VAC/180~264VAC | | | | | |
| Impact current | Cold start current 15A/115VAC 30A/230VAC | | | | | |
| Overload protection | 105%~201% cut off the output, automatic recovery | | | | | |
| Over voltage protection | | | | | | |
| Setup, rise, hold up time | 200ms, 50ms, 20ms/230VAC at full load | | | | | |
| Withstand voltage | I/P-O/P: 1.5kV I/P-FG: 1.5kV O/P-FG: 0.5kV 1minute | | | | | |
| Isolation resistance | I/P-O/P I/P-FG O/P-F/G: 500VDC/100MΩ | | | | | |
| Working temperature | -10°C~+50°C | | | | | |
| Dimension | 199×110×50mm | | | | | |

# S-201W, S-250W Switching Power Supply



S-201W

## S-201W

Single output: power 200W
Input voltage: 90~132VAC/180~264VAC by switch

### Technical data

| Specification \ Model | S-201-5 | S-201-12 | S-201-18 | S-201-24 | S-201-36 | S-201-48 |
|---|---|---|---|---|---|---|
| DC output voltage, current | 5V 0~40A | 12V 0~16A | 15V 0~13A | 24V 0~8.3A | 36V 0~5.5A | 48V 0~4.2A |
| Wave and noise | 150mVp-p | 150mVp-p | 150mVp-p | 150mVp-p | 240mVp-p | 240mVp-p |
| Inlet wire stability | ±0.5% | ±0.5% | ±0.5% | ±0.5% | ±0.5% | ±0.5% |
| Load stability | ±1% | ±0.5% | ±0.5% | ±0.5% | ±0.5% | ±0.5% |
| Efficiency | 74% | 80% | 80% | 83% | 84% | 84% |
| Adjustable range for DC voltage | ±10% | ±10% | ±10% | ±10% | ±10% | ±10% |
| Input voltage range | 90~132VAC/180~264VAC by switch 254~370VDC 47~63Hz | | | | | |
| Impact current | Cold start current 25A/115VAC 50A/230VAC | | | | | |
| Overload protection | 105%~135% cut off the output, automatic recovery | | | | | |
| Over voltage protection | 115%~145% shut down O/P voltage, re-power on to recover | | | | | |
| Setup, rise, hold up time | 200ms, 100ms, 20ms/230VAC at full load | | | | | |
| Withstand voltage | I/P-O/P: 1.5kV I/P-FG: 1.5kV O/P-FG: 0.5kV 1minute | | | | | |
| Isolation resistance | I/P-O/P I/P-FG O/P-F/G: 500VDC/100MΩ | | | | | |
| Working temperature | -10°C~+50°C | | | | | |
| Dimension | 215×115×50mm | | | | | |



S-250W

## S-250W

Single output: power 250W
Input voltage: 90~132VAC/180~264VAC by switch

### Technical data

| Specification \ Model | S-250-5 | S-250-12 | S-250-15 | S-250-24 | S-250-36 | S-250-48 |
|---|---|---|---|---|---|---|
| DC output voltage, current | 5V 0~45A | 12V 0~20A | 15V 0~16A | 24V 0~10A | 36V 0~6.7A | 48V 0~5A |
| Wave and noise | 150mVp-p | 150mVp-p | 150mVp-p | 150mVp-p | 200mVp-p | 240mVp-p |
| Inlet wire stability | ±2% | ±1% | ±1% | ±1% | ±1% | ±1% |
| Load stability | ±2% | ±1% | ±1% | ±1% | ±1% | ±1% |
| Efficiency | 74% | 79% | 79% | 81.5% | 84% | 84% |
| Adjustable range for DC voltage | ±10% | ±10% | ±10% | ±10% | ±10% | ±10% |
| Input voltage range | 90~132VAC/180~264VAC by switch 254~370VDC 47~63Hz | | | | | |
| Impact current | Cold start current 25A/115VAC 50A/230VAC | | | | | |
| Overload protection | 105%~135% cut off the output, automatic recovery | | | | | |
| Over voltage protection | 115%~150% shut down O/P voltage, re-power on to recover | | | | | |
| Setup, rise, hold up time | 200ms, 50ms, 16ms/230VAC at full load | | | | | |
| Withstand voltage | I/P-O/P: 1.5kV I/P-FG: 1.5kV O/P-FG: 0.5kV 1minute | | | | | |
| Isolation resistance | I/P-O/P I/P-FG O/P-F/G: 500VDC/100MΩ | | | | | |
| Working temperature | -10°C~+50°C | | | | | |
| Dimension | 215×115×50mm | | | | | |

# S-350W Switching Power Supply



S-350W

## S-350W

Single output: power 350W
Input voltage: 90~132VAC/180~264VAC by switch

## Technical data

| Specification \ Model | S-350-5 | S-350-12 | S-350-15 | S-350-18 | S-350-24 |
|---|---|---|---|---|---|
| DC output voltage, current | 5V 0~50A | 12V 0~29A | 15V 0~23A | 18V 0~19A | 24V 0~14A |
| Wave and noise | 150mVp-p | 150mVp-p | 150mVp-p | 150mVp-p | 150mVp-p |
| Inlet wire stability | ±0.5% | ±0.5% | ±0.5% | ±0.5% | ±0.5% |
| Load stability | ±0.5% | ±0.5% | ±0.5% | ±0.5% | ±0.5% |
| Efficiency | 73% | 83% | 83% | 84% | 85% |
| Adjustable range for DC voltage | ±10% | ±10% | ±10% | ±10% | ±10% |
| Input voltage range | 90~132VAC/180~264VAC by switch 254~370VDC 47~63Hz | | | | |
| Impact current | Cold start current 25A/115VAC 50A/230VAC | | | | |
| Overload protection | 105%~135% cut off the output, automatic recovery | | | | |
| Over voltage protection | 115%~150% shut down O/P voltage, re-power on to recover | | | | |
| Setup, rise, hold up time | 200ms, 50ms, 20ms/230VAC at full load | | | | |
| Withstand voltage | I/P-O/P: 1.5kV I/P-FG: 1.5kV O/P-FG: 0.5kV 1minute | | | | |
| Isolation resistance | I/P-O/P I/P-FG O/P-F/G: 500VDC/100MΩ | | | | |
| Working temperature | -10°C~+50°C | | | | |
| Dimension | 215×115×50mm | | | | |

F

## S-350W

Single output: power 350W
Input voltage: 90~132VAC/180~264VAC by swit



S-350W

## Technical data

| Specification \ Model | S-350-27 | S-200-36 | S-200-48 | S-200-60 | S-200-70 | S-200-110 |
|---|---|---|---|---|---|---|
| DC output voltage, current | 27V 0~13A | 36V 0~9.7A | 48V 0~7.3A | 60V 0~6A | 70V 0~0.5A | 110V 0~3A |
| Wave and noise | 150mVp-p | 150mVp-p | 150mVp-p | 200mVp-p | 200mVp-p | 240mVp-p |
| Inlet wire stability | ±0.5% | ±0.5% | ±0.5% | ±0.5% | ±0.5% | ±0.5% |
| Load stability | ±0.5% | ±0.5% | ±0.5% | ±0.5% | ±0.5% | ±0.5% |
| Efficiency | 85% | 85% | 86% | 86% | 86% | 86% |
| Adjustable range for DC voltage | ±10% | ±10% | ±10% | ±10% | ±10% | ±10% |
| Input voltage range | 90~132VAC/180~264VAC by switch 254~370VDC 47~63Hz | | | | | |
| Impact current | Cold start current 25A/115VAC 50A/230VAC | | | | | |
| Overload protection | 105%~135% cut off the output, automatic recovery | | | | | |
| Over voltage protection | 115%~150% shut down O/P voltage, re-power on to recover | | | | | |
| Setup, rise, hold up time | 200ms, 50ms, 20ms/230VAC at full load | | | | | |
| Withstand voltage | I/P-O/P: 1.5kV I/P-FG: 1.5kV O/P-FG: 0.5kV 1minute | | | | | |
| Isolation resistance | I/P-O/P I/P-FG O/P-F/G: 500VDC/100MΩ | | | | | |
| Working temperature | -10°C~+50°C | | | | | |
| Dimension | 215×115×50mm | | | | | |

# S-400W, S-500W Switching Power Supply



S-400W

## S-400W

Single output: power 400W
Input voltage: 90~132VAC/180~264VAC by switch

### Technical data

| Specification \ Model | S-400-5 | S-400-12 | S-400-24 | S-400-48 |
|---|---|---|---|---|
| DC output voltage, current | 5V 0~60A | 12V 0~33A | 24V 0~16.5A | 48V 0~8.3A |
| Wave and noise | 100mVp-p | 150mVp-p | 150mVp-p | 200mVp-p |
| Inlet wire stability | ±0.5% | ±0.5% | ±0.5% | ±0.5% |
| Load stability | ±1% | ±0.5% | ±0.5% | ±0.5% |
| Efficiency | 73% | 74% | 81% | 83% |
| Adjustable range for DC voltage | ±10% | ±10% | ±10% | ±10% |
| Input voltage range | 90~132VAC/180~264VAC by switch 254~370VDC 47~63Hz | | | |
| Impact current | Cold start current 25A/115VAC 50A/230VAC | | | |
| Overload protection | 105%~135% cut off the output, automatic recovery | | | |
| Over voltage protection | 115%-150% shut down O/P voltage, re-power on to recover | | | |
| Setup, rise, hold up time | 200ms, 50ms, 20ms/230VAC at full load | | | |
| Withstand voltage | I/P-O/P: 1.5kV I/P-FG: 1.5kV O/P-FG: 0.5kV 1minute | | | |
| Isolation resistance | I/P-O/P I/P-FG O/P-F/G: 500VDC/100MΩ | | | |
| Working temperature | -10°C~+50°C | | | |
| Dimension | 215×115×50mm | | | |

F



S-500W

## S-500W

Single output: power 500W
Input voltage: 90~132VAC/180~264VAC by switch

### Technical data

| Specification \ Model | S-500-12 | S-500-24 | S-500-36 | S-500-48 |
|---|---|---|---|---|
| DC output voltage, current | 12V 0~40A | 24V 0~20A | 36V 0~14A | 48V 0~10A |
| Wave and noise | 100mVp-p | 150mVp-p | 150mVp-p | 150mVp-p |
| Inlet wire stability | ±0.5% | ±0.5% | ±0.5% | ±0.5% |
| Load stability | ±0.5% | ±0.5% | ±0.5% | ±0.5% |
| Efficiency | 83% | 85% | 86% | 87% |
| Adjustable range for DC voltage | ±10% | ±10% | ±10% | ±10% |
| Input voltage range | 90~132VAC/180~264VAC by switch 254~370VDC 47~63Hz | | | |
| Impact current | Cold start current 25A/115VAC 50A/230VAC | | | |
| Overload protection | 105%~300% cut off the output, automatic recovery | | | |
| Over voltage protection | 115%-140% shut down O/P voltage, re-power on to recover | | | |
| Setup, rise, hold up time | 800ms, 20ms, 36ms/230VAC at full load | | | |
| Withstand voltage | I/P-O/P: 1.5kV I/P-FG: 1.5kV O/P-FG: 0.5kV 1minute | | | |
| Isolation resistance | I/P-O/P I/P-FG O/P-F/G: 500VDC/100MΩ | | | |
| Working temperature | -10°C~+50°C | | | |
| Dimension | 238×124×65mm | | | |

# S-600W, DR-30W Switching Power Supply



S-600W

## S-600W

Single output: power 600W
Input voltage: 90~132VAC/180~264VAC by switch

### Technical data

| Specification \ Model | S-600-12 | S-600-24 | S-600-36 | S-600-48 |
|---|---|---|---|---|
| DC output voltage, current | 12V 0~50A | 24V 0~25A | 36V 0~16.7A | 48V 0~12.5A |
| Wave and noise | 100mVp-p | 150mVp-p | 150mVp-p | 150mVp-p |
| Inlet wire stability | ±0.5% | ±0.5% | ±0.5% | ±0.5% |
| Load stability | ±0.5% | ±0.5% | ±0.5% | ±0.5% |
| Efficiency | 83% | 85% | 86% | 87% |
| Adjustable range for DC voltage | ±10% | ±10% | ±10% | ±10% |
| Input voltage range | 90~132VAC/180~264VAC by switch 254~370VDC 47~63Hz | | | |
| Impact current | Cold start current 25A/115VAC 50A/230VAC | | | |
| Overload protection | 105%~300% cut off the output, automatic recovery | | | |
| Over voltage protection | 115%-140% shut down O/P voltage, re-power on to recover | | | |
| Setup, rise, hold up time | 800ms, 20ms, 36ms/230VAC at full load | | | |
| Withstand voltage | I/P-O/P: 1.5kV I/P-FG: 1.5kV O/P-FG: 0.5kV 1minute | | | |
| Isolation resistance | I/P-O/P I/P-FG O/P-F/G: 500VDC/100MΩ | | | |
| Working temperature | -10°C~+50°C | | | |
| Dimension | 238×124×65mm | | | |




DR-30W

## DR-30W

Single output: power 30W
Input voltage: 85~264VAC 120~370VDC

### Technical data

| Specification \ Model | DR-30-12 | DR-30-24 |
|---|---|---|
| DC output voltage, current | 12V 0~2A | 24V 0~1.5A |
| Wave and noise | 120mVp-p | 150mVp-p |
| Inlet wire stability | ±0.5% | ±0.5% |
| Load stability | ±0.5% | ±0.5% |
| Efficiency | 81% | 83% |
| Adjustable range for DC voltage | ±10% | ±10% |
| Input voltage range | 85~264VAC 120~370VDC 47-63Hz | |
| Impact current | Cold start current 15A/115VAC 30A/230VAC | |
| Overload protection | 105%~160% cut off the output, automatic recovery | |
| Over voltage protection | 115%-135% shut down O/P voltage, re-power on to recover | |
| Setup, rise, hold up time | 800ms, 60ms, 50ms/230VAC at full load | |
| Withstand voltage | I/P-O/P: 1.5kV I/P-FG: 1.5kV O/P-FG: 0.5kV 1minute | |
| Isolation resistance | I/P-O/P I/P-FG O/P-F/G: 500VDC/100MΩ | |
| Working temperature | -10°C~+50°C | |
| Dimension | 78×93×56mm | |

# DR-45W, DR-60W Switching Power Supply




DR-45W

## DR-45W

Single output: power 45W
Input voltage: 85~264VAC 120~370VDC

### Technical data

| Specification \ Model | DR-45-12 | DR-30-24 |
|---|---|---|
| DC output voltage, current | 12V 0~3.5A | 24V 0~2A |
| Wave and noise | 120mVp-p | 150mVp-p |
| Inlet wire stability | ±0.5% | ±0.5% |
| Load stability | ±0.5% | ±0.5% |
| Efficiency | 77% | 80% |
| Adjustable range for DC voltage | ±10% | ±10% |
| Input voltage range | 85~264VAC 120~370VDC 47-63Hz | |
| Impact current | Cold start current 28A/115VAC 56A/230VAC | |
| Overload protection | 105%~150% cut off the output, automatic recovery | |
| Over voltage protection | 115%-135% shut down O/P voltage, re-power on to recover | |
| Setup, rise, hold up time | 800ms, 60ms, 50ms/230VAC at full load | |
| Withstand voltage | I/P-O/P: 1.5kV I/P-FG: 1.5kV O/P-FG: 0.5kV 1minute | |
| Isolation resistance | I/P-O/P I/P-FG O/P-F/G: 500VDC/100MΩ | |
| Working temperature | -10°C~+50°C | |
| Dimension | 78×93×56mm | |

F




DR-60W

## DR-60W

Single output: power 60W
Input voltage: 85~264VAC 120~370VDC

### Technical data

| Specification \ Model | DR-60-12 | DR-60-24 |
|---|---|---|
| DC output voltage, current | 12V 0~4.5A | 24V 0~2.5A |
| Wave and noise | 120mVp-p | 150mVp-p |
| Inlet wire stability | ±0.5% | ±0.5% |
| Load stability | ±0.5% | ±0.5% |
| Efficiency | 82% | 84% |
| Adjustable range for DC voltage | ±10% | ±10% |
| Input voltage range | 85~264VAC 120~370VDC 47-63Hz | |
| Impact current | Cold start current 18A/115VAC 36A/230VAC | |
| Overload protection | 105%~160% cut off the output, automatic recovery | |
| Over voltage protection | 115%-135% shut down O/P voltage, re-power on to recover | |
| Setup, rise, hold up time | 800ms, 60ms, 50ms/230VAC at full load | |
| Withstand voltage | I/P-O/P: 1.5kV I/P-FG: 1.5kV O/P-FG: 0.5kV 1minute | |
| Isolation resistance | I/P-O/P I/P-FG O/P-F/G: 500VDC/100MΩ | |
| Working temperature | -10°C~+50°C | |
| Dimension | 78×93×56mm | |

# DR-75W, DR-120W Switching Power Supply



DR-75W
(Single output DIN rail power supply)

## DR-75W

Single output: power 75W
Input voltage: 85~264VAC 120~370VDC

### Technical data

55.5×125.2×100mm

| Specification \ Model | DR-75-12 | DR-75-24 |
|---|---|---|
| DC output voltage, current | 12V 0~6.3A | 24V 0~3.2A |
| Wave and noise | 100mVp-p | 150mVp-p |
| Inlet wire stability | ±0.5% | ±0.5% |
| Load stability | ±0.5% | ±0.5% |
| Efficiency | 76% | 80% |
| Adjustable range for DC voltage | ±10% | ±10% |
| Input voltage range | 85~264VAC 120~370VDC 47-63Hz | |
| Impact current | Cold start current 20A/115VAC 40A/230VAC | |
| Overload protection | 105%~150% cut off the output, automatic recovery | |
| Over voltage protection | 121%-142% shut down O/P voltage, re-power on to recover | |
| Setup, rise, hold up time | 1000ms, 60ms, 60ms/230VAC at full load | |
| Withstand voltage | I/P-O/P: 1.5kV I/P-FG: 1.5kV O/P-FG: 0.5kV 1minute | |
| Isolation resistance | I/P-O/P I/P-FG O/P-F/G: 500VDC/100MΩ | |
| Working temperature | -10°C~+50°C | |
| Dimension | 55.5×125.2×100mm | |



DR-120W
(Single output DIN rail power supply)

## DR-120W

Single output: power 120W
Input voltage: 85~264VAC 120~370VDC

### Technical data

65.5×125.2×100mm

| Specification \ Model | DR-30-12 | DR-120-24 |
|---|---|---|
| DC output voltage, current | 12V 0~10A | 24V 0~5A |
| Wave and noise | 85mVp-p | 85mVp-p |
| Inlet wire stability | ±0.5% | ±0.5% |
| Load stability | ±1% | ±0.5% |
| Efficiency | 80% | 84% |
| Adjustable range for DC voltage | ±10% | ±10% |
| Input voltage range | 85~264VAC 120~370VDC 47-63Hz | |
| Impact current | Cold start current 20A/115VAC 40A/230VAC | |
| Overload protection | 105%~150% cut off the output, automatic recovery | |
| Over voltage protection | 120%-140% shut down O/P voltage, re-power on to recover | |
| Setup, rise, hold up time | 500ms, 70ms, 30ms/230VAC at full load | |
| Withstand voltage | I/P-O/P: 1.5kV I/P-FG: 1.5kV O/P-FG: 0.5kV 1minute | |
| Isolation resistance | I/P-O/P I/P-FG O/P-F/G: 500VDC/100MΩ | |
| Working temperature | -10°C~+50°C | |
| Dimension | 65.5×125.2×100mm | |

# YCPE Series Pure Sine Wave Inverter With E Display



OVERLOAD PROTECTION

OVER TEMPERATURE PROTECTION

SHORT CURRENT PROTECTION

LOW/OVER VOLTAGE PROTECTION

Intelligent digital display
Input & output fully isolated.
Very stable AC output, low voltage drop
Customized input voltage: 36V/60V/72V/96V/110V

| Model / Specification | YCPE300 | YCPE500 | YCPE1000 | YCPE1500 | YCPE2000 | YCPE3000 | YCPE4000 | YCPE5000 | YCPE6000 | YCPE8000 |
|---|---|---|---|---|---|---|---|---|---|---|
| Rated Power | 300W | 500W | 1000W | 1500W | 2000W | 3000W | 4000W | 5000W | 6000W | 8000W |
| Surge Power | 600W | 1000W | 2000W | 3000W | 4000W | 6000W | 8000W | 10000W | 12000W | 16000W |
| Input Voltage | 12/24/48VDC | | | | | | | 24/48VDC | | |
| Output Voltage | 110/220VAC±5% | | | | | | | | | |
| USB Port | 5V 2A | | | | | | | | | |
| Frequency | 50Hz ± 3 or 60Hz±3 | | | | | | | | | |
| Output Waveform | Pure Sine Wave | | | | | | | | | |
| Soft Start | YES | | | | | | | | | |
| THD/AC Regulation | THD<3%(LinearLoad) | | | | | | | | | |
| Output Efficiency | 94%MAX | | | | | | | | | |
| Cooling Way | Intelligent Cooling Fan | | | | | | | | | |
| Protection | Battery Low Voltage & Over Voltage,<br>Over Load,<br>Over Temperature, Short Circuit | | | | | | | | | |
| Working Temperature | -10°C-+50°C | | | | | | | | | |
| Dimension(L*W*H) (cm) | 20*11.2*6 | 21.5*15*7.8 | 27.8*17*10.5 | 38.1*17*10.5 | 38.1*17*10.5 | 48*19.9*8.4 | 44*20*15 | 51*20*15 | 61*20*15 | 61*20*15 |
| Meas./Ctn(L*W*H) (cm) | 54.5*49*32.5 /18PCS | 76*45*28 /10pcs | 53.5*47*40.7 /6pcs | 47.5*47*36.5 /4PCS | 47.5*47*36.5 /4PCS | 62.5*53*29.5 /4pcs | 63.5*30.8*24 /1pcs | 63.5*30.8*24 /1pcs | 73.5*30.8*24 /1pcs | 73.5*30.8*24/ 1pcs |
| N.W./Unit(kg) | 0.82kg | 1.7kg | 2.74kg | 4kg | 4kg | 6.1kg | 9kg | 10.12kg | 11.62kg | 13.14kg |
| G.W./Ctn | 20kg | 22.5kg | 20.5kg | 21.6kg | 21.6kg | 30.44kg | 10.84kg | 11.72kg | 13.44kg | 14.96kg |
| Packing | Carton | | | | | | Honeycomb carton | | | |
| Warranty | 2 Years | | | | | | | | | |

## E Model Display

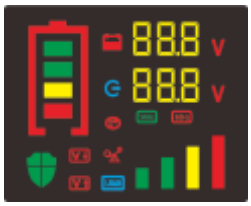

Power On

Frequency

Battery Connected

Battery Level

Output Load Percent

Battery Voltage & AC Output Voltage

Inverter Overload Protection

Inverter Over Voltage Protection

Inverter Low Voltage Protection

Inverter Over Temperature Protection

Inverter Under Protection

Inverter Normal Working

## Working Mode

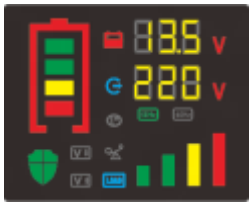

Normal Working

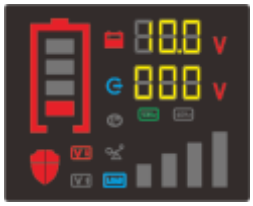

Low-volt Protection

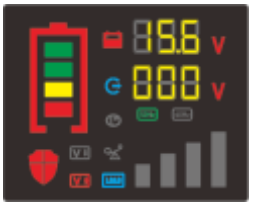

High-volt Protection

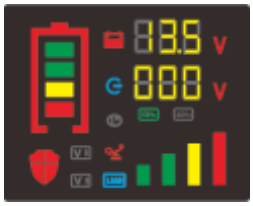

Overload Protection

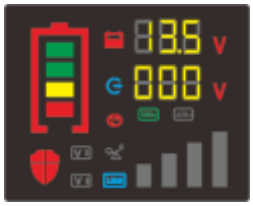

High-Temp Protection

F

## Power Supply

# YCP Series Pure Sine Wave Inverter



OVERLOAD PROTECTION

OVER TEMPERATURE PROTECTION

SHORT CURRENT PROTECTION

LOW/OVER VOLTAGE PROTECTION

| Model Specification | YCP300 | YCP500 | YCP1000 | YCP1500 | YCP2000 | YCP3000 | YCP4000 | YCP5000 | YCP6000 | YCP8000 |
|---|---|---|---|---|---|---|---|---|---|---|
| Rated Power | 300W | 500W | 1000W | 1500W | 2000W | 3000W | 4000W | 5000W | 6000W | 8000W |
| Surge Power | 600W | 1000W | 2000W | 3000W | 4000W | 6000W | 8000W | 10000W | 12000W | 16000W |
| Input Voltage | 12/24/48VDC | | | | | | | 24/48VDC | | |
| Output Voltage | 110/220VAC±5% | | | | | | | | | |
| USB Port | 5V 1A | | | | | | | | | |
| Frequency | 50Hz ± 3 or 60Hz±3 | | | | | | | | | |
| Output Waveform | Pure Sine Wave | | | | | | | | | |
| Soft Start | YES | | | | | | | | | |
| THD/AC Regulation | THD<3%(LinearLoad) | | | | | | | | | |
| Output Efficiency | 94%MAX | | | | | | | | | |
| Cooling Way | Intelligent Cooling Fan | | | | | | | | | |
| Protection | "Battery Low Voltage & Over Voltage, Over Load, Over Temperature, Short Circuit" | | | | | | | | | |
| Working Temperature | -10°C-+50°C | | | | | | | | | |
| Dimension(L*W*H) (cm) | 19.5*11.2*6.0 | 23.2*15*7.8 | 32.6*16.5*8.7 | 36.2*16.5*8.7 | 45.6*20.6*12.2 | 46*21*8.6 | 46.5*21.6*15.6 | 46.5*21.6*15.6 | 51.8*20*14.5 | 66*30*23.5 |
| Meas./Ctn(L*W*H) (cm) | 51*49*30.7 /18pcs | 63*34*38.5 /10pcs | 67.5*37.3*29.7 /6pcs | 52*47.5*38 /4pcs | 52*47.5*38 /4pcs | 53.5*51.5*27.5 /1pcs | 57.5*31.5*25 /1pcs | 57.5*31.5*25 /1pcs | 64.3*30*23.5 /1pcs | 74*30*23.5 /1pcs |
| N.W./Unit(kg) | 1.0kg | 2.0kg | 3.1kg | 4.3kg | 4.02kg | 6.1kg | 10kg | 10.5kg | 12kg | 14kg |
| G.W./Ctn | 23kg | 24kg | 22kg | 20kg | 24.5kg | 28kg | 12kg | 12.5kg | 14kg | 18kg |
| Packing | Honeycomb carton | | | | | | | | | |
| Warranty | 2 Years | | | | | | | | | |

F

## Power Supply

# YCPC Series Pure Sine Wave Inverter With Charger



OVERLOAD PROTECTION

OVER TEMPERATURE PROTECTION

SHORT CURRENT PROTECTION

LOW/OVER VOLTAGE PROTECTION

| Model Specification | YCPC500 | YCPC1000 | YCPC1500 | YCPC2000 | YCPC3000 | YCPC4000 | YCPC5000 |
|---|---|---|---|---|---|---|---|
| Rated Power | 500W | 1000W | 1500W | 2000W | 3000W | 4000W | 5000W |
| Surge Power | 1000W | 2000W | 3000W | 4000W | 6000W | 8000W | 10000W |
| Input Voltage | 12/24/48VDC | | | | | 24/48VDC | |
| Output Voltage | 110/220VAC±5% | | | | | | |
| USB Port | 5V 2A | | | | | | |
| Frequency | 50Hz ± 3 or 60Hz±3 | | | | | | |
| Output Waveform | Pure Sine Wave | | | | | | |
| Soft Start | YES | | | | | | |
| THD/AC Regulation | 10/20/30A optional | | | | | | |
| Output Efficiency | Grid first | | | | | | |
| Cooling Way | <10 ms | | | | | | |
| Protection | Intelligent Cooling Fan | | | | | | |
| Working Temperature | Battery Low Voltage & Over Voltage, Over Load,Over Temperature, Short Circuit | | | | | | |
| Dimension(L*W*H)(cm) | 36.5*16.5*9 | 40*16.5*9 | 43.5*16.5*11.3 | 43.5*16.5*11.3 | 45*21.2*15.2 | 49.7*21.6*15.1 | 73.5*30.8*24 |
| Meas./Ctn(L*W*H)(cm) | 49.5*48*31.5 /4pcs | 55*47.5*31.5 /4pcs | 57*47*38.5 /4pcs | 57*47*38.5 /4pcs | 63.5*30.8*24 /1pcs | 63.5*30.8*24 /1pcs | 61*21.6*15.1 /1pcs |
| N.W./Unit(kg) | 2.8kg | 3.62kg | 5.04kg | 5.04kg | 8.9kg | 11.14kg | 13.56kg |
| G.W./Ctn | 13.76kg | 4.06kg | 5.92kg | 5.92kg | 10.12kg | 13.4kg | 16.08kg |
| Packing | Carton | | | | Honeycomb carton | | |
| Warranty | 2 Years | | | | | | |

F

## Select socket type

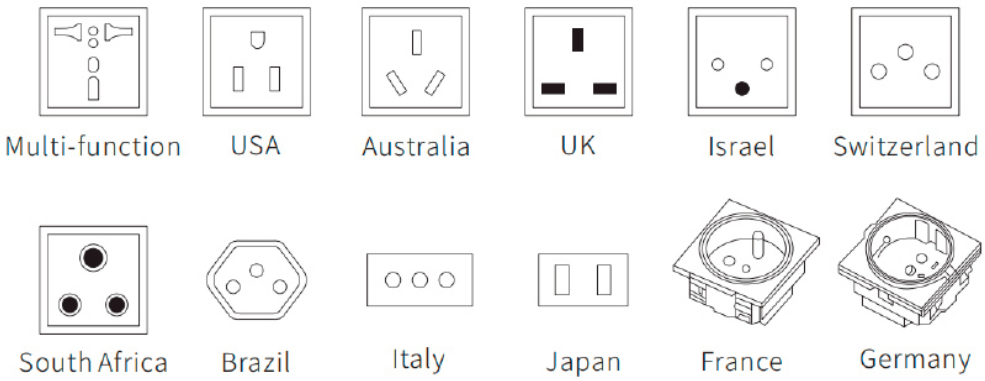

# YCM Modified Sine Wave Inverter



OVERLOAD PROTECTION

OVER TEMPERATURE PROTECTION

SHORT CURRENT PROTECTION

LOW/OVER VOLTAGE PROTECTION

| Model Specification | YCP300 | YCP500 | YCP1000 | YCP1500 | YCP2000 | YCP3000 | YCP4000 | YCP5000 | YCP6000 | YCP8000 |
|---|---|---|---|---|---|---|---|---|---|---|
| Rated Power | 300W | 500W | 1000W | 1500W | 2000W | 3000W | 4000W | 5000W | 6000W | 8000W |
| Surge Power | 600W | 1000W | 2000W | 3000W | 4000W | 6000W | 8000W | 10000W | 12000W | 16000W |
| Input Voltage | 12/24/48VDC | | | | | | | 24/48VDC | | |
| Output Voltage | 110/220VAC±5% | | | | | | | | | |
| USB Port | 5V 1A | | | | | | | | | |
| Frequency | 50Hz ± 3 or 60Hz±3 | | | | | | | | | |
| Output Waveform | Pure Sine Wave | | | | | | | | | |
| Soft Start | YES | | | | | | | | | |
| THD/AC Regulation | THD<3%(LinearLoad) | | | | | | | | | |
| Output Efficiency | 94%MAX | | | | | | | | | |
| Cooling Way | Intelligent Cooling Fan | | | | | | | | | |
| Protection | "Battery Low Voltage & Over Voltage, Over Load, Over Temperature, Short Circuit" | | | | | | | | | |
| Working Temperature | -10°C-+50°C | | | | | | | | | |
| Dimension(L*W*H) (cm) | 19.5*11.2*6.0 | 23.2*15*7.8 | 32.6*16.5*8.7 | 36.2*16.5*8.7 | 45.6*20.6*12.2 | 46*21*8.6 | 46.5*21.6*15.6 | 46.5*21.6*15.6 | 51.8*20*14.5 | 66*30*23.5 |
| Meas./Ctn(L*W*H) (cm) | 51*49*30.7 /18pcs | 63*34*38.5 /10pcs | 67.5*37.3*29.7 /6pcs | 52*47.5*38 /4pcs | 52*47.5*38 /4pcs | 53.5*51.5*27.5 /1pcs | 57.5*31.5*25 /1pcs | 57.5*31.5*25 /1pcs | 64.3*30*23.5 /1pcs | 74*30*23.5 /1pcs |
| N.W./Unit(kg) | 1.0kg | 2.0kg | 3.1kg | 4.3kg | 4.02kg | 6.1kg | 10kg | 10.5kg | 12kg | 14kg |
| G.W./Ctn | 23kg | 24kg | 22kg | 20kg | 24.5kg | 28kg | 12kg | 12.5kg | 14kg | 18kg |
| Packing | Honeycomb carton | | | | | | | | | |
| Warranty | 2 Years | | | | | | | | | |

F

# MSQ Current Transformer




## General

MSQ current transformer is suitable for indoor use, with a maximum voltage of 0.66kV and below, a load power factor of 0.8, and a rated frequency of 50/60Hz in AC circuits for measuring or metering current and electrical energy. Installed by fixing the busbar or bottom plate, the transformer has a window in the middle that can be used for a single busbar or cable to pass through.

Standard: IEC61869-2.

## Operating conditions

1. The altitude shall not exceed 1000m.
2. The operating environment temperature for the 2 transformers is: indoor -5 ° C~40 ° C
3. The three transformers are for indoor use, and other usage conditions considered are as follows:
   a. The impact of solar radiation can be ignored;
   b. There is no obvious pollution of dust, smoke, corrosive gases, steam or salt in the ambient air;
   c. The humidity conditions are as follows:
      i. The average relative humidity measured within 24 hours shall not exceed 95%;
      ii. The average water vapor pressure within 24 hours shall not exceed 2.2kPa;
      iii. The average relative humidity within one month shall not exceed 90%;
      iv. The average water vapor pressure within one month shall not exceed 1.8kPa.

## Type designation

| Current transformer | | The maximum width that can be achieved through the mother row (mm) | Current transformation ratio |
|---|---|---|---|
| MSQ | - | 30 | 30/5A |
| / | | / | / |

# MSQ Current Transformer

## Technical data



MSQ-30

| Current ratio (A) | Capacity (VA) | | Mandrel turns | Overall and mounting dimensions(mm) |
|---|---|---|---|---|
| | Class 0.5 | Class 1.0 | | |
| 30/5 | | 1 | 1 | 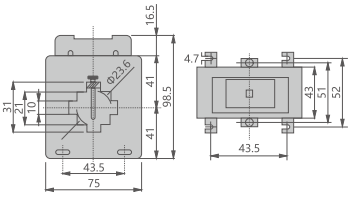 |
| 40/5 | | 1 | 1 | |
| 50/5 | | 1 | 1 | |
| 60/5 | 1 | 1 | 1 | |
| 75/5 | 1.5 | 1.5 | 1 | |
| 80/5 | 2.5 | 2.5 | 1 | |
| 100/5 | 2.5 | 5 | 1 | |
| 150/5 | 5 | 5-10 | 1 | |
| 200/5 | 5 | 5-10 | 1 | |
| 250/5 | 5 | 5-10 | 1 | |
| 300/5 | 5 | 5-10 | 1 | |



MSQ-40

| | | | | |
|---|---|---|---|---|
| 100/5 | 2.5 | 2.5 | 1 | 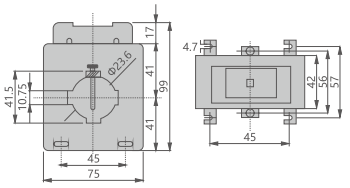 |
| 150/5 | 5 | 3 | 1 | |
| 200/5 | 5 | 5 | 1 | |
| 250/5 | 5 | 5 | 1 | |
| 300/5 | 5 | 5 | 1 | |
| 400/5 | 5 | 5 | 1 | |
| 500/5 | 5 | 5 | 1 | |

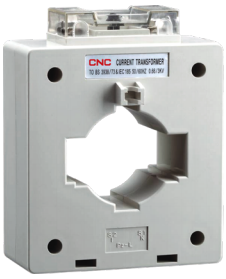

MSQ-60

| | | | | |
|---|---|---|---|---|
| 250/5 | 5 | 5 | 1 | 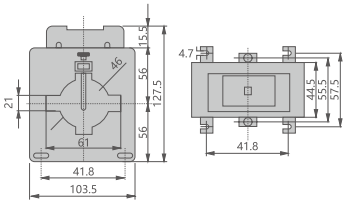 |
| 300/5 | 5 | 5 | 1 | |
| 400/5 | 5 | 5 | 1 | |
| 500/5 | 5 | 5 | 1 | |
| 600/5 | 10 | 10 | 1 | |
| 750/5 | 10 | 10 | 1 | |
| 800/5 | 10 | 10 | 1 | |
| 1000/5 | 15 | 15 | 1 | |



MSQ-100

| | | | | |
|---|---|---|---|---|
| 1500/5 | 15 | 15 | 1 | 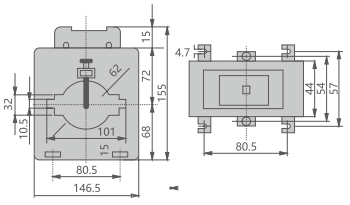 |
| 1600/5 | 15 | 15 | 1 | |
| 2000/5 | 15 | 15 | 1 | |
| 2250/5 | 15 | 15 | 1 | |
| 2500/5 | 15 | 15 | 1 | |
| 3000/5 | 15 | 15 | 1 | |

F

# MSQ Current Transformer

## Technical data



MSQ-85

| Current ratio (A) | Capacity (VA) | | Mandrel turns | Overall and mounting dimensions(mm) |
|---|---|---|---|---|
| | Class 0.5 | Class 1.0 | | |
| 1000/5 | 2.5 | 5 | 1 | 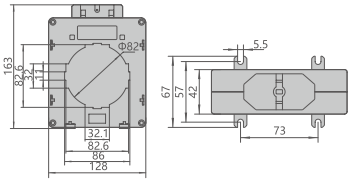 |
| 1250/5 | 5 | 5-10 | 1 | |
| 1600/5 | 5 | 5-10 | 1 | |
| 2000/5 | 5 | 5-10 | 1 | |
| 2500/5 | 5 | 5-10 | 1 | |



MSQ-125

| | | | | |
|---|---|---|---|---|
| 1500/5 | 15 | 15 | 1 | 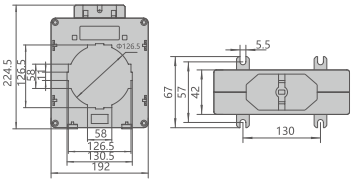 |
| 1600/5 | 15 | 15 | 1 | |
| 2000/5 | 20 | 20 | 1 | |
| 2500/5 | 20 | 20 | 1 | |
| 3000/5 | 20 | 20 | 1 | |
| 3200/5 | 20 | 20 | 1 | |
| 4000/5 | 20 | 20 | 1 | |



MSQ-200

| | | | | |
|---|---|---|---|---|
| 2000/5 | 20 | 20 | 1 | 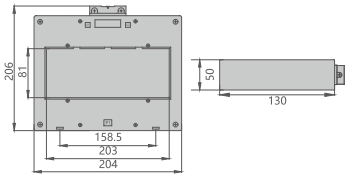 |
| 2500/5 | 20 | 20 | 1 | |
| 3000/5 | 20 | 20 | 1 | |
| 3200/5 | 20 | 20 | 1 | |
| 4000/5 | 20 | 20 | 1 | |
| 5000/5 | 20 | 20 | 1 | |
| 6000/5 | 20 | 20 | 1 | |

# RCT Current Transformer




## General

RCT type is indoor type current transformer. It is suitable for using in the circuit whose rated voltage is up to 0.5kV, frequency 50 Hz to do the current, power measuring or relay production. This moulded case current transformer has small size and light weight, panel fixing.

## Type designation

R CT - □

- Mandrel aperture
- Current transformer
- Annulus

## Operating conditions

1. Working place: Indoor
2. Ambient temperature: -5°C~40°C
3. Humidity: < 80%
4. Altitude: < 1000m
5. Atmospheric conditions: no serious pollution

## Technical data

| | Current ratio (A) | Capacity (VA) | | Mandrel turns |
|---|---|---|---|---|
| | | class 0.5 | class 1.0 | |
| RCT-25 | 75/5 | 2.5 | 2.5 | 1 |
| | 100/5 | 2.5 | 2.5 | 1 |
| RCT-35 | 75/5 | 2.5 | 2.5 | 1 |
| | 100/5 | 2.5 | 2.5 | 1 |
| | 150/5 | 5 | 5 | 1 |
| | 200/5 | 5 | 5 | 1 |
| | 250/5 | 5 | 5 | 1 |
| | 300/5 | 5 | 5 | 1 |

## Overall and mounting dimensions(mm)

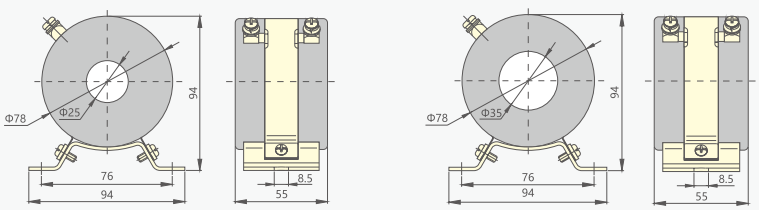


F

# RCT Current Transformer




RCT-60

| Current ratio (A) | Capacity (VA) | | Mandrel turns | Overall and mounting dimensions(mm) |
|---|---|---|---|---|
| | Class 0.5 | Class 1.0 | | |
| 400/5 | 5 | 5 | 1 | 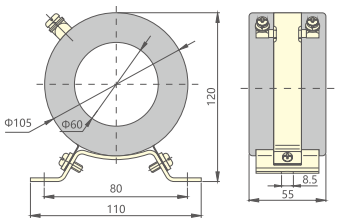 |
| 500/5 | 10 | 10 | 1 | |
| 600/5 | 10 | 10 | 1 | |
| 750/5 | 10 | 10 | 1 | |
| 800/5 | 10 | 10 | 1 | |
| 1000/5 | 10 | 10 | 1 | |
| 1200/5 | 10 | 10 | 1 | |






RCT-90

| | | | | |
|---|---|---|---|---|
| 800/5 | 10 | 10 | 1 | 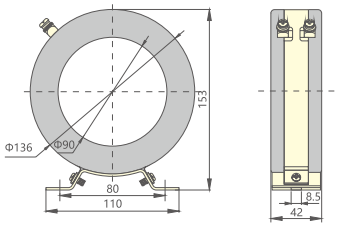 |
| 1000/5 | 10 | 10 | 1 | |
| 1200/5 | 10 | 10 | 1 | |
| 1500/5 | 10 | 10 | 1 | |
| 1600/5 | 10 | 10 | 1 | |






RCT-110

| | | | | |
|---|---|---|---|---|
| 1500/5 | 10 | 10 | 1 | 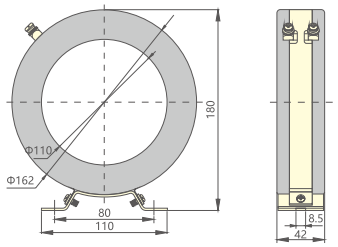 |
| 1600/5 | 10 | 10 | 1 | |
| 2000/5 | 20 | 20 | 1 | |
| 2500/5 | 20 | 20 | 1 | |
| 3000/5 | 20 | 20 | 1 | |



## Ordering information

Following information should be specified when ordering:

1. Type and window width
2. Current ratio
3. Accuracy
4. Also could be customized according to customer's requirement.

# YCP Current Transformer

## Technical data




YCP-45/14

| Current ratio (A) | Capacity (VA) | | | | Mandrel turns | Overall and mounting dimensions(mm) |
|---|---|---|---|---|---|---|
| | Class 3.0 | Class 1.0 | Class 0.5 | Class 0.2 | | |
| 30/5 | 1 | | | | 1 | |
| 40/5 | 1 | | | | 1 | |
| 50/5 | | 1.5 | | | 1 | |
| 60/5 | | 2.5 | | | 1 | |
| 75/5 | | 2.5 | | | 1 | |
| 80/5 | | 2.5 | | | 1 | |
| 100/5 | | 2.5 | | | 1 | |

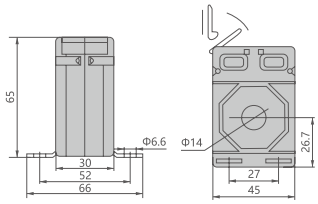





YCP-62/WS

| | | | | | |
|---|---|---|---|---|---|
| 5/5 | | 5 | 5 | | 1 |
| 10/5 | | 5 | 5 | | 1 |
| 30/5 | | 5 | 5 | | 1 |
| 40/5 | | 5 | 5 | | 1 |
| 50/5 | | 5 | 5 | | 1 |
| 60/5 | | 5 | 5 | | 1 |
| 75/5 | | 5 | 5 | | 1 |
| 80/5 | | 5 | 5 | | 1 |

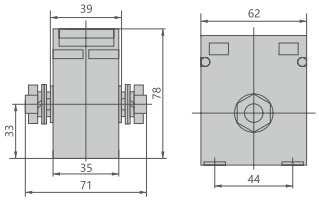





YCP-62/20

| | | | | | |
|---|---|---|---|---|---|
| 30/5 | 1 | | | | 1 |
| 40/5 | 1 | | | | 1 |
| 50/5 | | 2.5 | | | 1 |
| 60/5 | | 2.5 | | | 1 |
| 75/5 | | 2.5 | | | 1 |
| 80/5 | | 2.5 | | | 1 |
| 100/5 | | 2.5 | | | 1 |
| 150/5 | | 5 | | | 1 |

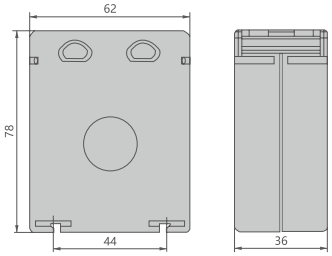





YCP-62/30

| | | | | | |
|---|---|---|---|---|---|
| 40/5 | 1 | | | | 1 |
| 50/5 | 2.5 | 1.5 | | | 1 |
| 60/5 | 2.5 | 1.5 | | | 1 |
| 75/5 | | 2.5 | | | 1 |
| 80/5 | | 2.5 | | | 1 |
| 100/5 | | | 2.5 | | 1 |
| 150/5 | | | 2.5 | | 1 |
| 200/5 | | | 5 | | 1 |
| 250/5 | | | 5 | | 1 |
| 300/5 | | | 5 | | 1 |

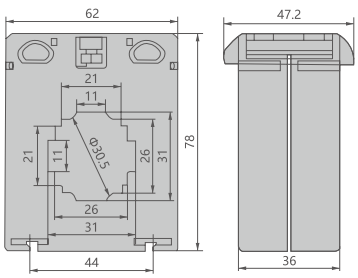


F

# YCP Current Transformer

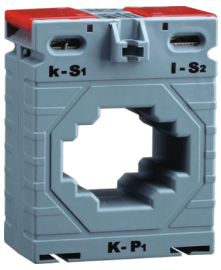


YCP-62/40

| Current ratio (A) | Capacity (VA) | | | | Mandrel turns | Overall and mounting dimensions(mm) |
|---|---|---|---|---|---|---|
| | Class 3.0 | Class 1.0 | Class 0.5 | Class 0.2 | | |
| 150/5 | | 2.5 | | | 1 | |
| 200/5 | | 5 | | | 1 | |
| 250/5 | | | 5 | | 1 | |
| 300/5 | | | 5 | | 1 | |
| 400/5 | | | 5 | | 1 | |
| 500/5 | | | 5 | | 1 | |
| 600/5 | | | 7.5 | | 1 | |

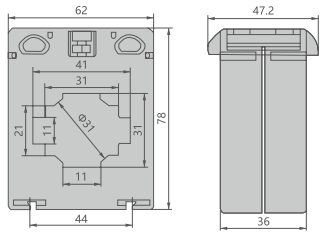





YCP-74/40

| | | | | | | |
|---|---|---|---|---|---|---|
| 200/5 | | | 5 | | 1 | |
| 250/5 | | | 5 | | 1 | |
| 300/5 | | | 5 | | 1 | |
| 400/5 | | | 5 | | 1 | |
| 500/5 | | | 10 | | 1 | |
| 600/5 | | | 10 | | 1 | |
| 800/5 | | | 10 | 5 | 1 | |

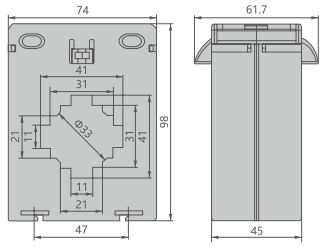





YCP-74/50

| | | | | | | |
|---|---|---|---|---|---|---|
| 300/5 | | | 5 | | 1 | |
| 400/5 | | | 5 | | 1 | |
| 500/5 | | | 5 | | 1 | |
| 600/5 | | | 15 | | 1 | |
| 800/5 | | | 15 | 5 | 1 | |
| 1000/5 | | | 15 | 5 | 1 | |

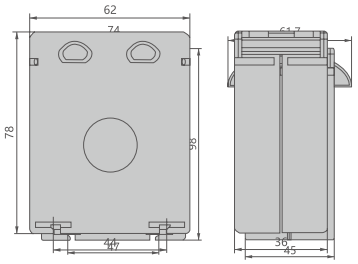





YCP-86/60

| | | | | | | |
|---|---|---|---|---|---|---|
| 500/5 | | | 5 | | 1 | |
| 600/5 | | | 5 | | 1 | |
| 800/5 | | | 10 | 5 | 1 | |
| 1000/5 | | | 15 | 5 | 1 | |
| 1200/5 | | | 15 | 5 | 1 | |
| 1500/5 | | | 15 | 5 | 1 | |

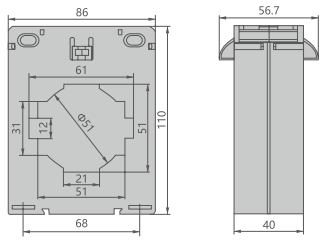


F

# YCP Current Transformer



YCP-104/80

| Current ratio (A) | Capacity (VA) | | | | Mandrel turns | Overall and mounting dimensions(mm) |
|---|---|---|---|---|---|---|
| | Class 3.0 | Class 1.0 | Class 0.5 | Class 0.2 | | |
| 800/5 | | | 15 | 5 | 1 | 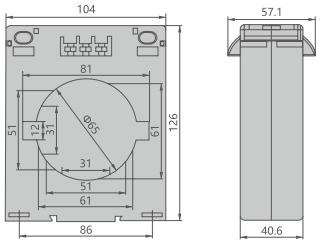 |
| 1000/5 | | | 15 | 5 | 1 | |
| 1200/5 | | | 30 | 5 | 1 | |
| 1500/5 | | | 30 | 10 | 1 | |
| 1600/5 | | | 30 | 10 | 1 | |
| 2000/5 | | | 30 | 10 | 1 | |



YCP-140/100

| | | | | | | |
|---|---|---|---|---|---|---|
| 800/5 | | | 15 | 5 | 1 | 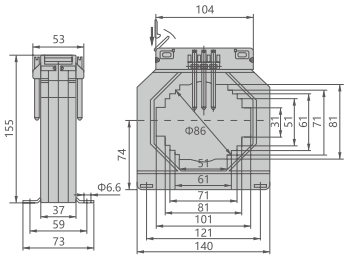 |
| 1000/5 | | | 15 | 5 | 1 | |
| 1200/5 | | | 15 | 5 | 1 | |
| 1500/5 | | | 20 | 5 | 1 | |
| 1600/5 | | | 20 | 10 | 1 | |
| 2000/5 | | | 30 | 15 | 1 | |
| 2500/5 | | | 30 | 15 | 1 | |
| 3000/5 | | | *30 | *15 | 1 | |

F

* Long term use of 100% rated primary current, order has to be specified.

# BSMJ Self-healing Shunt Capacitor




## General

Self-healing low voltage shunt power capacitor is used in 50Hz and 60Hz power system, it mainly improves power factor, reduces reactive power loss, improves voltage quality and so on. It is the best power-saving products which is highly recommended by our company.

Standards: IEC60831-1:2017

## Type designation

B S MJ 0.45 - 15 - 3

- 3: Phase (3 indicated that three-phase, one that single-phase)
- 15: Rated capacity (kvar)
- 0.45: Rated voltage (0.45kV)
- MJ: Media code (metallized polypropylene film)
- S: impregnated in Microcrystal
- B: Shunt capacitor

## Operating conditions

1. Compacted and light: Its volume and weight are only 1/4 and 1/5 of the old product because of the using of a new dielectric-metallized polypropylene film.
2. Low loss: The real figure is lower than 0.10%, so the loss of the capacitor itself is extremely low, and the heat it gives out is little and the rise of temperature is low, so its service life is very long and it can save energy at the same time.
3. Excellent self-healing ability: Damage of part of the dielectric caused by over-voltage can be self-healed quickly and return to normal state, so the reliability is much higher.
4. Safety: Built-in self-discharge resistor and safety equipment. The self-discharge resistor can automatically discharge the electric energy the capacitor carries. If there is anything fault with the capacitor, the safety equipment will cut off power in time, thus prevent further troubles from happening. So it's much safer to use this kind of capacitor.
5. No oil leakage: The capacitor uses advanced semi-solid impregnant whose drip melting point is above 70°C. There will be no loss of oil during the course of using it, thus to protect the surroundings from being polluted. The capacitor itself does not have to run the risk of invalidation caused by oil leakage.

# BSMJ Self-healing Shunt Capacitor

## Technical data

1. Service conditions: ambient temperature-25 °C~+50°C, humidity≤85% RH, and altitude lower than 2000m.
2. Rated voltage:250VAC,400VAC,525VAC,690VAC,750VAC,1050VAC.
3. Rated output:1~100kvar.
4. Capacitance tolerance:-5~+10%
5. Tangent of the loss angle: With the power frequency rated voltage, tg6≤0.1% at 20 °C.
6. Withstand voltage: Between terminals 2.15 times rated voltage for 10 seconds, between terminals and container 3kVAC for 10 seconds.
7. Max permissible over-voltage:110% rated voltage.
8. Max permissible over-current:130% rated current.
9. Self sustained discharge ability: Give 2Un DC voltage to capacitor, the residual voltage reduced to 75V or lower within 3 minutes after power off.

| Model BSMJ | Rated volt (kV) | Rated capacity (kvar) | Rated capacity (μF) | Rated current (A) | H (mm) | Outgoing terminal | Drawing No. |
|---|---|---|---|---|---|---|---|
| 0.4-1-3 | 0.4 | 1 | 19.9 | 1.4 | 105 | M6 | 1 |
| 0.4-2-3 | 0.4 | 2 | 39.8 | 2.9 | 105 | M6 | 1 |
| 0.4-3-3 | 0.4 | 3 | 59.7 | 4.3 | 125 | M6 | 1 |
| 0.4-4-3 | 0.4 | 4 | 79.6 | 5.8 | 125 | M6 | 1 |
| 0.4-5-3 | 0.4 | 5 | 99.5 | 7.2 | 125 | M6 | 1 |
| 0.4-6-3 | 0.4 | 6 | 119.4 | 8.7 | 125 | M6 | 1 |
| 0.4-7.5-3 | 0.4 | 7.5 | 149.2 | 10.8 | 125 | M6 | 1 |
| 0.4-8-3 | 0.4 | 8 | 159.2 | 11.6 | 125 | M6 | 1 |
| 0.4-10-3 | 0.4 | 10 | 198.9 | 14.4 | 125 | M6 | 1 |
| 0.4-12-3 | 0.4 | 12 | 238.7 | 17.3 | 180 | M6 | 1 |
| 0.4-14-3 | 0.4 | 14 | 278.5 | 20.2 | 210 | M6 | 1 |
| 0.4-15-3 | 0.4 | 15 | 298.4 | 21.7 | 210 | M6 | 1 |
| 0.4-16-3 | 0.4 | 16 | 318.3 | 23.1 | 210 | M6 | 1 |
| 0.4-18-3 | 0.4 | 18 | 358.1 | 26.0 | 245 | M6 | 1 |
| 0.4-20-3 | 0.4 | 20 | 397.9 | 28.9 | 245 | M6 | 1 |
| 0.4-22-3 | 0.4 | 22 | 437.7 | 31.8 | 210 | M8 | 2 |

# BSMJ Self-healing Shunt Capacitor

| Model BSMJ | Rated volt (kV) | Rated capacity (kvar) | Rated capacity (μF) | Rated current (A) | "H (mm)" | Outgoing terminal | Drawing No. |
|---|---|---|---|---|---|---|---|
| 0.4-24-3 | 0.4 | 24 | 477.4 | 34.6 | 210 | M8 | 2 |
| 0.4-25-3 | 0.4 | 25 | 497.4 | 36.1 | 210 | M8 | 2 |
| 0.4-28-3 | 0.4 | 28 | 557.3 | 40.4 | 260 | M8 | 2 |
| 0.4-30-3 | 0.4 | 30 | 596.8 | 43.3 | 260 | M8 | 2 |
| 0.4-35-3 | 0.4 | 35 | 696.3 | 50.5 | 260 | M8 | 2 |
| 0.4-40-3 | 0.4 | 40 | 796.2 | 57.7 | 330 | M8 | 2 |
| 0.4-45-3 | 0.4 | 45 | 895.2 | 65.0 | 230 | M10 | 3 |
| 0.4-50-3 | 0.4 | 50 | 995.2 | 72.2 | 230 | M10 | 3 |
| 0.4-55-3 | 0.4 | 55 | 1094.2 | 79.4 | 230 | M10 | 3 |
| 0.4-60-3 | 0.45 | 60 | 1194.3 | 86.6 | 230 | M10 | 3 |
| 0.45-1-3 | 0.45 | 1 | 15.7 | 1.3 | 105 | M6 | 1 |
| 0.45-2-3 | 0.45 | 2 | 31.4 | 2.6 | 105 | M6 | 1 |
| 0.45-3-3 | 0.45 | 3 | 47.2 | 3.8 | 125 | M6 | 1 |
| 0.45-4-3 | 0.45 | 4 | 62.9 | 5.1 | 125 | M6 | 1 |
| 0.45-5-3 | 0.45 | 5 | 78.6 | 6.4 | 125 | M6 | 1 |
| 0.45-6-3 | 0.45 | 6 | 94.3 | 7.7 | 125 | M6 | 1 |
| 0.45-7.5-3 | 0.45 | 7.5 | 117.9 | 9.6 | 125 | M6 | 1 |
| 0.45-8-3 | 0.45 | 8 | 125.8 | 10.3 | 125 | M6 | 1 |
| 0.45-10-3 | 0.45 | 10 | 157.2 | 12.8 | 125 | M6 | 1 |
| 0.45-12-3 | 0.45 | 12 | 188.6 | 15.4 | 180 | M6 | 1 |
| 0.45-14-3 | 0.45 | 14 | 220.1 | 18.0 | 210 | M6 | 1 |
| 0.45-15-3 | 0.45 | 15 | 235.8 | 19.2 | 210 | M6 | 1 |
| 0.45-16-3 | 0.45 | 16 | 252.5 | 20.5 | 210 | M6 | 1 |
| 0.45-18-3 | 0.45 | 18 | 282.9 | 23.1 | 210 | M6 | 1 |
| 0.45-20-3 | 0.45 | 20 | 314.4 | 25.7 | 210 | M6 | 1 |
| 0.45-22-3 | 0.45 | 22 | 345.8 | 28.3 | 210 | M8 | 2 |
| 0.45-24-3 | 0.45 | 24 | 377.3 | 30.8 | 210 | M8 | 2 |
| 0.45-25-3 | 0.45 | 25 | 393.2 | 32.1 | 210 | M8 | 2 |
| 0.45-28-3 | 0.45 | 28 | 440.3 | 35.9 | 210 | M8 | 2 |
| 0.45-30-3 | 0.45 | 30 | 471.8 | 38.5 | 210 | M8 | 2 |
| 0.45-35-3 | 0.45 | 35 | 550.2 | 44.9 | 260 | M8 | 2 |
| 0.45-40-3 | 0.45 | 40 | 629.1 | 51.3 | 260 | M8 | 2 |
| 0.45-45-3 | 0.45 | 45 | 707.7 | 57.7 | 230 | M10 | 3 |
| 0.45-50-3 | 0.45 | 50 | 786.3 | 64.2 | 330 | M8 | 2 |
| 0.45-55-3 | 0.45 | 55 | 864.5 | 70.6 | 230 | M10 | 3 |
| 0.45-60-3 | 0.525 | 60 | 943.6 | 77.5 | 230 | M10 | 3 |
| 0.525-5-3 | 0.525 | 5 | 57.7 | 5.5 | 125 | M6 | 1 |
| 0.525-10-3 | 0.525 | 10 | 115.5 | 11.0 | 180 | M6 | 1 |
| 0.525-15-3 | 0.525 | 15 | 173.2 | 16.5 | 210 | M6 | 1 |
| 0.525-16-3 | 0.525 | 16 | 184.8 | 17.6 | 210 | M6 | 1 |
| 0.525-18-3 | 0.525 | 18 | 207.9 | 19.8 | 210 | M6 | 2 |
| 0.525-20-3 | 0.525 | 20 | 231.0 | 22.0 | 210 | M6 | 2 |
| 0.525-25-3 | 0.525 | 25 | 288.9 | 27.5 | 210 | M8 | 2 |
| 0.4-22-3 | 0.4 | 22 | 437.7 | 31.8 | 210 | M8 | 2 |

# BSMJ Self-healing Shunt Capacitor

| Model BSMJ | Rated volt (kV) | Rated capacity (kvar) | Rated capacity (μF) | Rated current (A) | H (mm) | Outgoing terminal | Drawing No. |
|---|---|---|---|---|---|---|---|
| 0.525-30-3 | 0.525 | 30 | 346.6 | 33.0 | 260 | M8 | 2 |
| 0.525-40-3 | 0.525 | 40 | 462.2 | 44.0 | 330 | M8 | 2 |
| 0.525-50-3 | 0.525 | 50 | 577.7 | 55.0 | 230 | M10 | 3 |
| 0.525-60-3 | 0.525 | 60 | 693.3 | 66.0 | 230 | M10 | 3 |
| 0.69-5-3 | 0.69 | 5 | 33.4 | 4.2 | 125 | M6 | 1 |
| 0.69-10-3 | 0.69 | 10 | 66.9 | 8.4 | 180 | M6 | 1 |
| 0.69-15-3 | 0.69 | 15 | 100.3 | 12.6 | 210 | M6 | 1 |
| 0.69-16-3 | 0.69 | 16 | 107.0 | 13.4 | 210 | M6 | 1 |
| 0.69-20-3 | 0.69 | 20 | 133.8 | 16.7 | 210 | M6 | 2 |
| 0.69-25-3 | 0.69 | 25 | 167.2 | 20.9 | 210 | M6 | 2 |
| 0.69-30-3 | 0.69 | 30 | 200.7 | 25.1 | 260 | M8 | 2 |
| 0.69-40-3 | 0.69 | 40 | 267.4 | 33.5 | 330 | M8 | 2 |
| 0.69-50-3 | 0.69 | 50 | 334.3 | 41.9 | 230 | M10 | 3 |

Note: Other special specifications and models can be provided according to user requirements.

## Overall and mounting dimensions(mm)

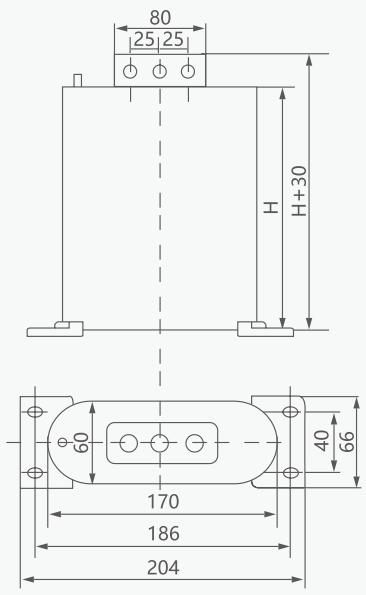


Figure 1

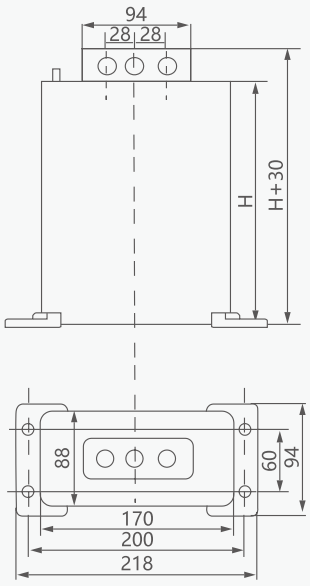


Figure 2

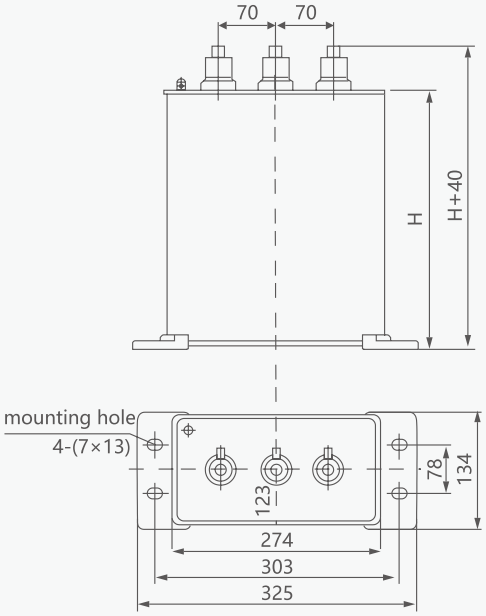


Figure 3

F

# BGMJ Self-healing Shunt Capacitor







## General

BGMJ capacitors are gas dry-type self-healing capacitors with built-in aluminum cans. The dielectric consists of low loss metallized poly-propylene film and protective gas. The capacitors have smaller dimension, long operation life, high AC load capacity and can be installed in any position because of the gas dry construction. Motor starting and moving capacitor can be supplied.

Standards: IEC60831-96

## Type designation

B G MJ 0.4 - 15 - 3

- Phase: 3: three-phase 1: single-phase
- Rated capacity (three-phase stands for three-phase total capacity)
- Line voltage kV
- Metallized polypropylene film
- Cylindrical
- Shunt capacitor

## Operating conditions

1. Capacitors, contactors, fuses and electrical connections generate heat dissipation(about 2.5 W/kvar total or 8 W/kvar with series reactors).
2. Specific precautions must be taken in order not to exceed temperature values of-25C/+55C(class D) category around the capacitors inside the cubicle.(refer to “Installation Guide”for more information).
3. The airflow inside the cubicle must go from bottom to top.
4. User is advised to check the harmonic content in the system before installation of capacitor. In case of high harmonics content in the network, it is necessary to use specifically adapted capacitors with additional series reactors to avoid resonance phenomena(detuned reactors).
5. The use of inappropriate capacitor will reduce its life time.
6. Use switching devices designed for capacitor switching duty if the capacitors are used alone. User can select normal contactor for switching with inrush current limiter such as detuned reactors.
7. Protection devices such as MCB, MCCB must be used along with every capacitor steps in a power factor correction panel or used for standalone PF compensation After switching off a capacitor,a delay of at least 1 minute must be allowed before switching on again to ensure the discharge of individual capacitor step/unit before re-connection.
8. All operations described in this user manual must be carried out in compliance with safety standards under the responsibility of a competent authority.
9. To access installed capacitors: Switch off main power supply.
10. Switch off power supply control circuit. Allow capacitor discharge time(1 minute)
11. Short circuit and earth the terminals to ensure that capacitors are fully discharged.

# BGMJ Self-healing Shunt Capacitor

## Operating conditions

1. Using Condition:-25 °C/+50 °C Humidity≤90% RH Altitude≤2000m
2. Over-voltage Permitted:1.0Un, 1.1Un 8h/d, 1.3Un 1min
3. Over-Current Permitted:1.3In
4. Impact Current:≤300In
5. Allowable offset on Reactive-load Power:-5-+10%
6. Loss Angle Tangent(Power Frequency Rated Voltage): tg 6 ≤0.0015
7. Dielectric Loss:≤0.25W/kvar
8. Testing Voltage: Between Poles 2.15Un 10s Between and Housing 3000VAC 60s

| Model BGMJ | Rated volt (V) | Rated capacity (kvar) | Rated capacity (μF) | Rated current (A) | Rated frequencies Hz | Dimension (mm) | Connection | Bottom bolt | Drawing No. |
|---|---|---|---|---|---|---|---|---|---|
| 0.25-2.5-3 | 250 | 2.5 | 127.4 | 5.8 | 50 | 76×180 | | M12×16 | 1 |
| 0.25-3-3 | 250 | 3 | 152.8 | 6.9 | 50 | 76×180 | | M12×16 | 1 |
| 0.25-4-3 | 250 | 4 | 203.8 | 9.2 | 50 | 76×240 | | M12×16 | 1 |
| 0.25-5-3 | 250 | 5 | 254.7 | 11.7 | 50 | 96×240 | | M16×25 | 2 |
| 0.25-6-3 | 250 | 6 | 305.7 | 13.9 | 50 | 96×240 | | M16×25 | 2 |
| 0.25-7.5-3 | 250 | 7.5 | 382.1 | 17.3 | 50 | 96×240 | | M16×25 | 2 |
| 0.25-8-3 | 250 | 8 | 407.6 | 18.5 | 50 | 96×240 | | M16×25 | 2 |
| 0.25-10-3 | 250 | 10 | 509.4 | 23.1 | 50 | 106×290 | | M16×25 | 2 |
| 0.25-12.5-3 | 250 | 12.5 | 636.8 | 28.9 | 50 | 106×290 | | M16×25 | 2 |
| 0.28-2.5-3 | 280 | 2.5 | 101.5 | 5.2 | 50 | 76×180 | | M12×16 | 1 |
| 0.28-3-3 | 280 | 3 | 121.8 | 6.2 | 50 | 76×180 | | M12×16 | 1 |
| 0.28-4-3 | 280 | 4 | 162.4 | 8.2 | 50 | 76×240 | | M12×16 | 1 |
| 0.28-5-3 | 280 | 5 | 203 | 10.3 | 50 | 76×240 | | M16×25 | 2 |
| 0.28-6-3 | 280 | 6 | 243.7 | 12.4 | 50 | 76×240 | | M16×25 | 2 |
| 0.28-7.5-3 | 280 | 7.5 | 304.6 | 15.5 | 50 | 96×240 | | M16×25 | 2 |
| 0.28-8-3 | 280 | 8 | 325 | 16.5 | 50 | 96×240 | | M16×25 | 2 |
| 0.28-10-3 | 280 | 10 | 406.1 | 20.6 | 50 | 96×240 | | M16×25 | 2 |
| 0.28-12.5-3 | 280 | 12.5 | 507.6 | 25.8 | 50 | 106×240 | | M16×25 | 2 |
| 0.45-2.5-3 | 450 | 2.5 | 39.3 | 3.2 | 50 | 76×180 | Δ | M12×16 | 1 |
| 0.45-3-3 | 450 | 3 | 47.1 | 3.9 | 50 | 76×180 | Δ | M12×16 | 1 |
| 0.45-4-3 | 450 | 4 | 62.8 | 5.1 | 50 | 76×180 | Δ | M12×16 | 1 |
| 0.45-5-3 | 450 | 5 | 78.5 | 6.4 | 50 | 76×180 | Δ | M12×16 | 1 |
| 0.45-6-3 | 450 | 6 | 94.2 | 7.7 | 50 | 76×180 | Δ | M12×16 | 1 |
| 0.45-7.5-3 | 450 | 7.5 | 117.8 | 9.6 | 50 | 76×180 | Δ | M12×16 | 1 |
| 0.45-8-3 | 450 | 8 | 125.6 | 10.2 | 50 | 76×240 | Δ | M12×16 | 1 |
| 0.45-10-3 | 450 | 10 | 157 | 12.8 | 50 | 76×240 | Δ | M12×16 | 1 |
| 0.45-12.5-3 | 450 | 12.5 | 196.3 | 16 | 50 | 76×240 | Δ | M12×16 | 1 |
| 0.45-15-3 | 450 | 15 | 235.5 | 19.2 | 50 | 96×240 | Δ | M16×25 | 2 |

# BGMJ Self-healing Shunt Capacitor

| Model BGMJ | Rated volt (V) | Rated capacity (kvar) | Rated capacity (μF) | Rated current (A) | Rated frequencies Hz | Dimension (mm) | Connection | Bottom bolt | Drawing No. |
|---|---|---|---|---|---|---|---|---|---|
| 0.45-16-3 | 450 | 16 | 251.2 | 20.5 | 50 | 96×240 | Δ | M16×25 | 2 |
| 0.45-20-3 | 450 | 20 | 314 | 25.6 | 50 | 96×240 | Δ | M16×25 | 2 |
| 0.45-25-3 | 450 | 25 | 392.5 | 32 | 50 | 106×240 | Δ | M16×25 | 2 |
| 0.45-30-3 | 450 | 30 | 471 | 38.5 | 50 | 106×290 | Δ | M16×25 | 2 |
| 0.48-2.5-3 | 480 | 2.5 | 34.5 | 3.0 | 50 | 76×180 | Δ | M12×16 | 1 |
| 0.48-3-3 | 480 | 3 | 41.4 | 3.6 | 50 | 76×180 | Δ | M12×16 | 1 |
| 0.48-4-3 | 480 | 4 | 55.2 | 4.8 | 50 | 76×180 | Δ | M12×16 | 1 |
| 0.48-5-3 | 480 | 5 | 69 | 6.0 | 50 | 76×180 | Δ | M12×16 | 1 |
| 0.48-6-3 | 480 | 6 | 82.8 | 7.2 | 50 | 76×180 | Δ | M12×16 | 1 |
| 0.48-7.5-3 | 480 | 7.5 | 103.5 | 9.0 | 50 | 76×240 | Δ | M12×16 | 1 |
| 0.48-8-3 | 480 | 8 | 110.4 | 9.6 | 50 | 76×240 | Δ | M12×16 | 1 |
| 0.48-10-3 | 480 | 10 | 138 | 12 | 50 | 76×240 | Δ | M12×16 | 1 |
| 0.48-12.5-3 | 480 | 12.5 | 172.5 | 15 | 50 | 96×240 | Δ | M16×25 | 2 |
| 0.48-15-3 | 480 | 15 | 207 | 18 | 50 | 96×240 | Δ | M16×25 | 2 |
| 0.48-16-3 | 480 | 16 | 220.8 | 19.2 | 50 | 96×240 | Δ | M16×25 | 2 |
| 0.48-20-3 | 480 | 20 | 276 | 24.1 | 50 | 106×240 | Δ | M16×25 | 2 |
| 0.48-25-3 | 480 | 25 | 345 | 30.1 | 50 | 106×290 | Δ | M16×25 | 2 |
| 0.525-5-3 | 525 | 5 | 57.8 | 5.5 | 50 | 76×180 | Δ | M12×16 | 1 |
| 0.525-7.5-3 | 525 | 7.5 | 86.6 | 8.3 | 50 | 76×180 | Δ | M12×16 | 1 |
| 0.525-10-3 | 525 | 10 | 115.5 | 11 | 50 | 76×180 | Δ | M12×16 | 1 |
| 0.525-12.5-3 | 525 | 12.5 | 144 | 13.8 | 50 | 76×240 | Δ | M12×16 | 1 |
| 0.525-15-3 | 525 | 15 | 173.3 | 16.5 | 50 | 96×240 | Δ | M16×25 | 2 |
| 0.525-20-3 | 525 | 20 | 231 | 22 | 50 | 106×240 | Δ | M16×25 | 2 |
| 0.525-25-3 | 525 | 25 | 288.8 | 27.5 | 50 | 106×290 | Δ | M16×25 | 2 |

F

## Overall and mounting dimensions(mm)

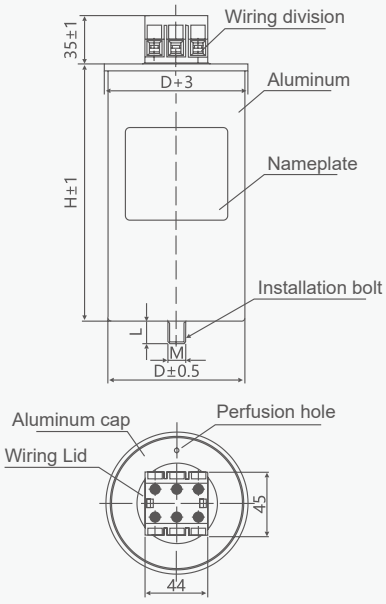


Figure 1

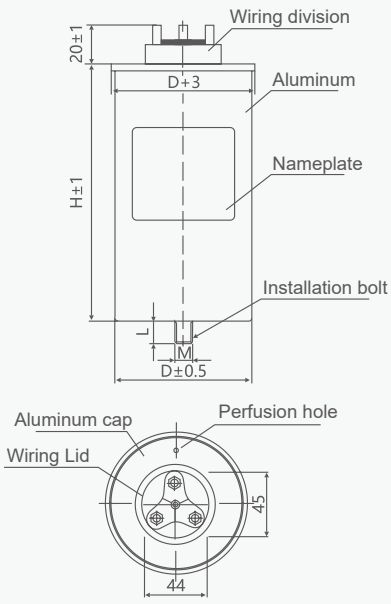


Figure 2

# YCZN Intelligent Capacitor



## General

YCZN Intelligent Capacitor is an integrated reactive power compensation device designed for 0.4kV power grids. It consists of measurement and control module, capacitor switching and composite switch, capacitor protection module, and two (▲ type) or one (Y type) low-voltage self-healing capacitor, forming an independent and complete intelligent compensation unit.

The low-voltage reactive power compensation device composed of intelligent capacitors offers several advantages, including flexible compensation modes, easy installation and maintenance, strong protection functions, compact size, excellent compensation effectiveness, low power consumption, and high reliability. It meets the fine requirements of users for improving power factor, enhancing power quality, and reducing energy losses through reactive power compensation.

When applied in industrial and mining enterprises with harmonic currents, it is recommended to use intelligent capacitors with reactive impedance to mitigate harmonics.

## Type designation

| Product name | | Functions | Compensation modes | Rated voltage | | Rated capacity | Reactor reactance rate |
|---|---|---|---|---|---|---|---|
| YCZN | - | K | S | 480 | / | 20(10+10) | 7% |
| YCZN | - | No code: Standard model<br>K: Anti-harmonic function | Three-phase compensation | 450: AC450V<br>480: AC480V<br>(with function K) | / | 10(5+5) :10kvar(5kvar+5kvar)<br>15(10+5) :15kvar(10kvar+5kvar)<br>20(10+10) :20kvar(10kvar+10kvar)<br>30(20+10) :30kvar(20kvar+10kvar)<br>40(20+20) :40kvar(20kvar+20kvar)<br>50(25+25) :50kvar(25kvar+25kvar)<br>60(30+30) :60kvar(30kvar+30kvar) | 7%<br>14% |
| | | | Phase-splitting compensation | 250: AC250V<br>280: AC280V<br>(with function K) | | 5:5kvar<br>10:10kvar<br>15:15kvar<br>20:20kvar<br>25:25kvar<br>30:30kvar<br>40:40kvar | |

## Operating Conditions

1. Ambient temperature: -20°C~+55°C
2. Relative humidity: ≤20% at 40°C; ≤90% at 20°C
3. Altitude: ≤2500m
4. Environmental conditions: no harmful gases and vapors, no conductive or explosive dust, no severe mechanical vibration

# YCZN Intelligent Capacitor

## Technical data

| | | |
|---|---|---|
| **Power conditions** | | |
| Working voltage | | Shared compensation: AC 450V ± 20%<br>Phase-splitting compensation: AC 250V ± 20% |
| Harmonic voltage | | Sinusoidal wave, total harmonic distortion ≤ 5%"\ |
| Rated frequency | | 50/60Hz |
| Power consumption | | ≤3VA |
| **Reactive power compensation parameters** | | |
| Reactive power compensation error | | ≤50% of the minimum capacitor capacity |
| Capacitor switching time | | ≥ 10s, adjustable from 10s to 180s |
| **Measurement error** | | |
| Voltage | | ±0.5% |
| Current | | ±0.5% |
| Power factor | | ±1% |
| Temperature | | ±1° C |
| **Protection error** | | |
| Voltage | | ±0.5% |
| Current | | ±0.5% |
| Temperature | | ±1° C |
| Time | | ±0.1s |
| **Reliability parameters** | | |
| Permissible switching times | | 100 1 million times |
| Capacitor capacity | Run time decay rate | ≤1%/ year |
| | Switching decay rate | ≤1%/ million times |

F

# YCZN Intelligent Capacitor

| Compensation modes | Model | Capacitor rated voltage (V) | Rated capacity (kvar) | Reactance rate |
|---|---|---|---|---|
| Conventional three-phase shared compensation | YCZN-S 450/10(5+5) | 450 | 10 | / |
| | YCZN-S 450/15(10+5) | 450 | 15 | |
| | YCZN-S 450/20(10+10) | 450 | 20 | |
| | YCZN-S 450/30(20+10) | 450 | 30 | |
| | YCZN-S 450/40(20+20) | 450 | 40 | |
| | YCZN-S 450/50(25+25) | 450 | 50 | |
| | YCZN-S 450/60(30+30) | 450 | 60 | |
| Conventional phase-splitting compensation | YCZN-F 250/5 | 250 | 5 | |
| | YCZN-F 250/10 | 250 | 10 | |
| | YCZN-F 250/15 | 250 | 15 | |
| | YCZN-F 250/20 | 250 | 20 | |
| | YCZN-F 250/25 | 250 | 25 | |
| | YCZN-F 250/30 | 250 | 30 | |
| | YCZN-F 250/40 | 250 | 40 | |
| Anti-harmonic three-phase shared compensation | YCZN-KS 480/10 | 480 | 10 | 7%/14% |
| | YCZN-KS 480/20 | 480 | 20 | 7%/14% |
| | YCZN-KS 480/30 | 480 | 30 | 7%/14% |
| | YCZN-KS 480/40 | 480 | 40 | 7%/14% |
| | YCZN-KS 480/50 | 480 | 50 | 7%/14% |
| Anti-harmonic phase-splitting compensation" | YCZN-KF 280/5 | 280 | 5 | 7%/14% |
| | YCZN-KF 280/10 | 280 | 10 | 7%/14% |
| | YCZN-KF 280/15 | 280 | 15 | 7%/14% |
| | YCZN-KF 280/20 | 280 | 20 | 7%/14% |
| | YCZN-KF 280/25 | 280 | 25 | 7%/14% |
| | YCZN-KF 280/30 | 280 | 30 | 7%/14% |

# YCZN Intelligent Capacitor

## Product functional equivalence diagram

Conventional shared compensation



6kA,15kA breaking type | 1 controller | 2 circuit breaker | 2 composite switch | 2 reactor | 2 capacitor



YCZN-K anti-harmonic integrated intelligent capacitor | 1 controller | 1 circuit breaker | 1 composite switch | 1 reactor | 1 capacitor

## Wiring diagram

Standard model

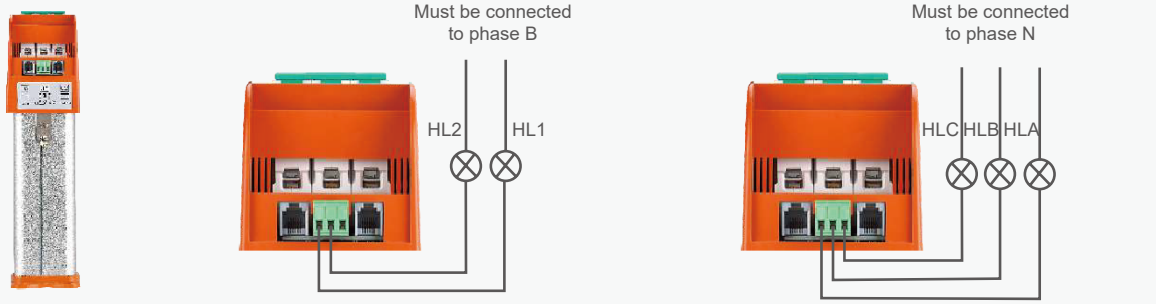


Product Rear View | Shared compensation type | 380V switching indicator | Phase- splitting compensation type | 220V switching indicator

Note: The indicator lights are connected using multicore copper wires with a cross-sectional area of 0.75 mm2.

# YCZN Intelligent Capacitor

## Single phase-splitting compensation wiring diagram (without controller)

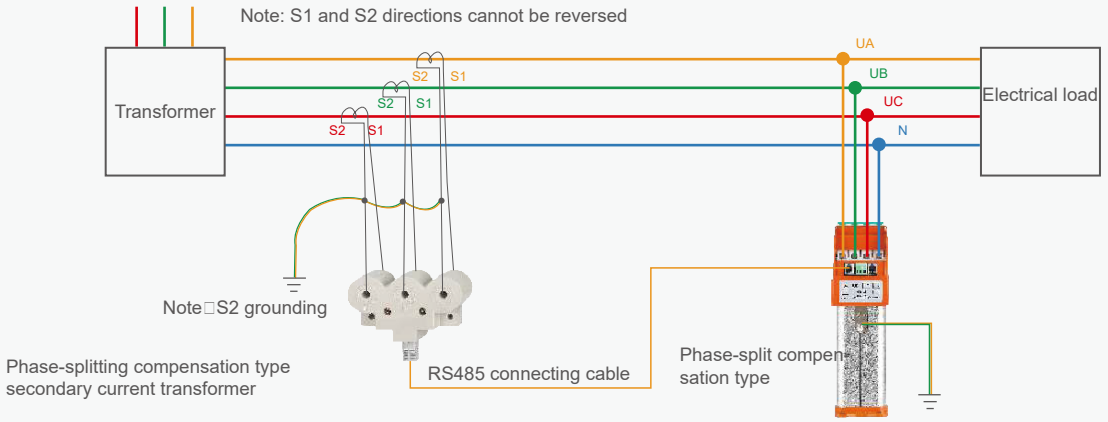


## Single phase shared compensation wiring diagram (without controller)

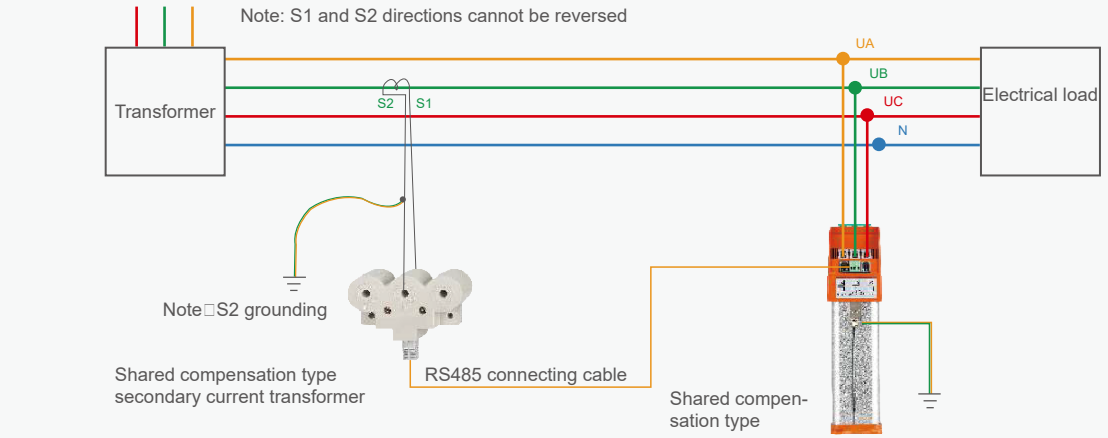


## Three-phase mixed compensation wiring diagram (with controller)

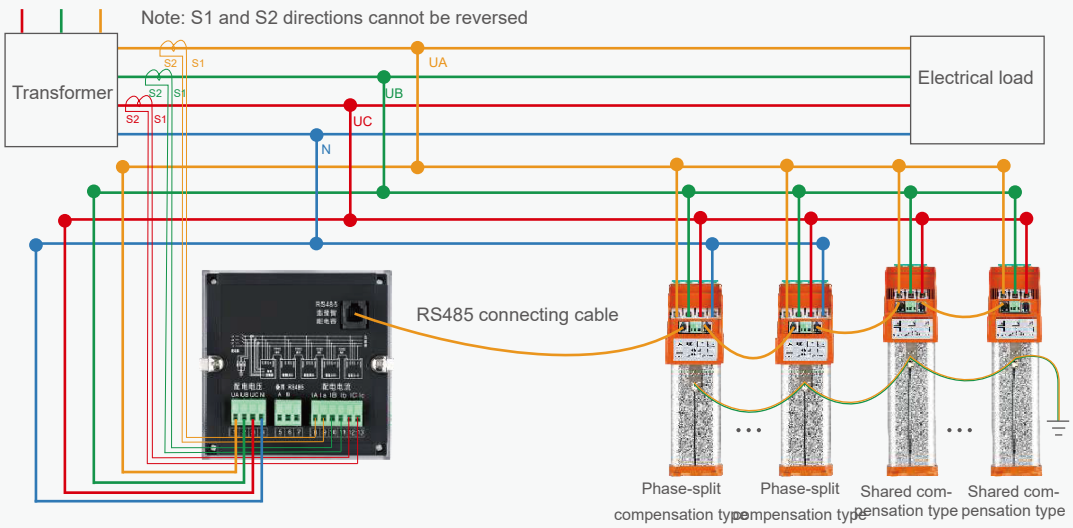


Note: Phase-splitting + Shared phase compensation Total number of capacitor≤32 units

F

# YCZN Intelligent Capacitor

Three-phase shared compensation wiring diagram (with controller)

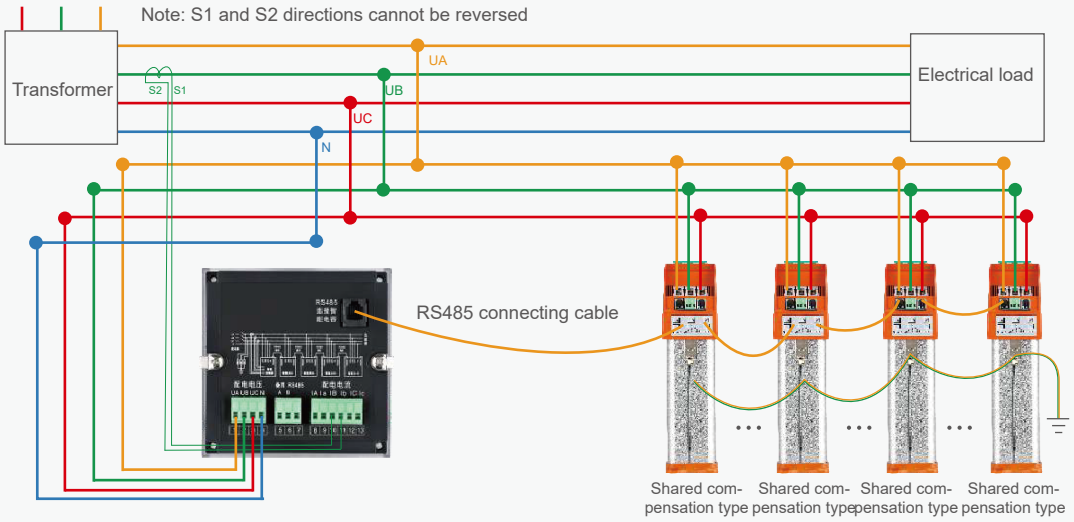


Note: Shared phase compensation Total number of capacitor≤32 units

F

# YCFK Intelligent Capacitor Switching




## General

The YCFK intelligent capacitor switching device uses thyristor switch and magnetic holding switch in parallel operation. It has the advantage of controllable silicon zero-crossing switch at the moment of connection and disconnection, and zero power consumption of the magnetic holding switch during normal connection. This switch has significant advantages such as no impact, low power consumption, and high lifespan, and can replace contactors or thyristor switches. It is widely used in low-voltage reactive power compensation systems.

## Type designation

| Product name | | Compensation modes | | Rated voltage | | Rated capacity | Reactor reactance rate | Communication mode |
|---|---|---|---|---|---|---|---|---|
| YCFK | - | △ | - | 400 | - | 45 | S | R |
| YCFK | - | △ :Three-phase Common Compensation | - | 400: AC400V | - | 45: 45A<br>63: 63A<br>80: 80A | S: (Standard version)<br>D: (With circuit breaker) | /: RS-485<br>R: RJ45 |
| | | Y:Three-phase Individual Compensation | | 250: AC250V | | | | |

Note: For Three-phase Individual Compensation (Y), the maximum rated current reaches 63A; the rated current corresponds to the compensation capacitor capacity as shown in the table.

F

## Operating Conditions

Environmental temperature: -20°C to +55°C

Relative humidity: ≤90% at 40°C

Altitude: ≤2500m

Environmental conditions: No harmful gases and vapors, no conductive or explosive dust, no severe mechanical vibrations.

# YCFK Intelligent Capacitor Switching

## Technical data

| | |
|---|---|
| Rated working voltage | Common compensation AC380V ±20% / Separate compensation AC220V ±20% |
| Rated frequency | 50Hz |
| Rated current | 45A, 63A, 80A |
| Control capacitor capacity | Three-phase ≤50kvar Delta connection; Single-phase ≤30kvar Y connection |
| Power consumption | ≤1.5VA |
| Service life | 300,000 times |
| Contact voltage drop | ≤100mV |
| Contact withstand voltage | >1600V |
| Response time: | 1000ms |
| Time interval between each connection and disconnection | ≥5s |
| Time interval between each connection and disconnection | ≥5s |
| Control signal | DC12V ±20% |
| Input impedance | ≥6.8KΩ |
| Conduction impedance | ≤0.003Ω |
| Inrush current | <1.5In |

YCFK-□S(Standard type)

| Compensation method | Model | Control capacity (kvar) | Control current(A) | Number of poles | Adaptation controller |
|---|---|---|---|---|---|
| Three-phase Common Compensation | YCFK-△-400-45S | ≤ 20 | 45 | 3P | JKWD5 |
| | YCFK-△-400-63S | ≤ 30 | 63 | 3P | JKWD5 |
| | YCFK-△-400-80S | ≤ 40 | 80 | 3P | JKWD5 |
| Phase compensation | YCFK-Y-400-45S | ≤ 20 | 45 | A+B+C | JKWF |
| | YCFK-Y-400-63S | ≤ 30 | 63 | A+B+C | JKWF |

YCFK-□D(with circuit breaker)

| Compensation method | Model | Control capacity (kvar) | Control current(A) | Number of poles | Adaptation controller |
|---|---|---|---|---|---|
| Three-phase Common Compensation | YCFK-△-400-45D | ≤ 20 | 45 | 3P | JKWD5 |
| | YCFK-△-400-63D | ≤ 30 | 63 | 3P | JKWD5 |
| Phase compensation | YCFK-Y-400-45D | ≤ 20 | 45 | A+B+C | JKWF |
| | YCFK-Y-400-63D | ≤ 30 | 63 | A+B+C | JKWF |

# YCFK Intelligent Capacitor Switching

## Wiring diagram

YCFK Hybrid Compensation Wiring Diagram, DC12V Control Method

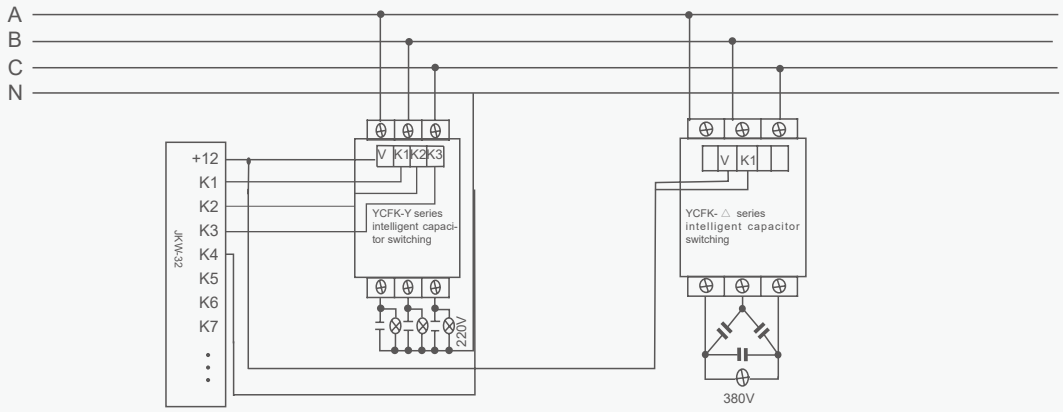


Precautions:

Before use, it is essential to carefully check the terminal screws of the main circuit connection. They must be securely tightened; otherwise, loose screws during operation can easily lead to damage to the switch.

(The incoming and outgoing wire terminals of this product are equipped with anti-loosening self-locking nuts, effectively ensuring that the product does not experience secondary loosening of the connections due to factors such as transportation and vibrations after the connections are securely made.)

F

## Overall and mounting dimensions (mm)

YCFK-□S

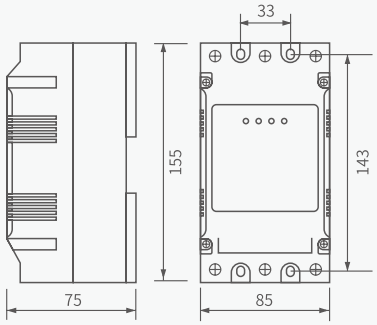


YCFK-□D

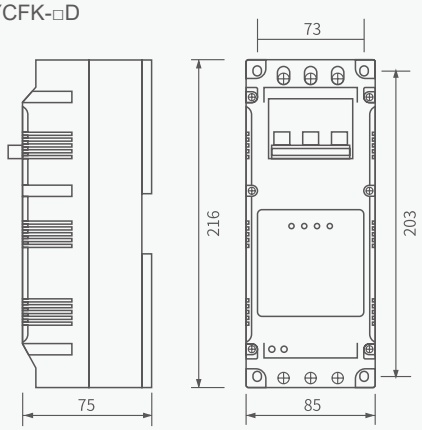

# JKW5C Reactive Power Auto-compensation Controller




## General

JKW5C series intelligent reactive power automatic compensation controller is especially used to control reactive power compensation in low-voltage distribution system, can be matched with various type of low-voltage static capacitance screen.Each has five specifications of 4, 6, 8, 10 and 12 output ways. This machine adopts the advanced technology from home and abroad, possesses advantages of small volume, light weight, complete functions, strong anti-jamming, stable and reliable operation, accurate compensation, etc. It is designed according to JB/T9663-1999 the latest national professional standard; approved by the national quality monitoring center of power control distribution equipments, and passed the type test.

Full digital design, AC sampling;

Adhering to the people-oriented design concept, modular assembly and appearance streamline design;

Real-time display of power factor, voltage, current, reactive power and capacitor switching state;

English prompt and digital input for setting parameters;

Capacitor control scheme supports power factor cyclic switching compensation or precise compensation of reactive power. The compensation scheme can be set through menu operation;

It has two working modes: manual compensation and automatic compensation;

Sampling physical quantity is power factor or reactive power.

## Features

- Altitude: ≤2500m Ambient temperature: -20°C~ +60°C
- Storage temperature:-40°C ~+70°C ,Environmental condition: without explosive and flammable dangerous medium, without corrosive metal gas and the conductive dust that may damage the electric insulation.The installation site has no violent vibration and no rain or snow erosion.
- Measuring data: Measuring voltage: 100V ~ 500V
  Measuring current: 0~6000A(primary current)
  Sensitivity: 50mA(Secondary current)
  Measuring power factor: lag 0.2 ~ lead 0.2
- Rated voltage: 380V±20%
- Measuring frequency: 47Hz ~ 53Hz
- Active power: 0~6553kW reactive power: 0~6553kvar
- Display performance:
- LED digital display, data display refresh period≤1s

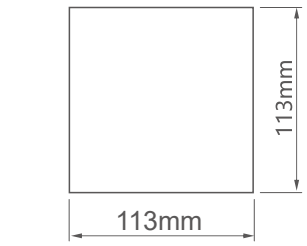


Hole size: 113mm x 113mm

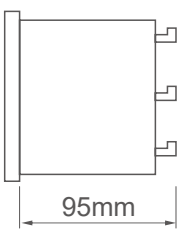


Insert depth: 95mm

## Wiring diagram

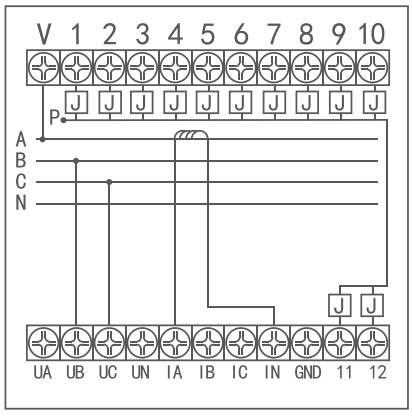


JKW5C-380V
voltage sampling wiring diagram

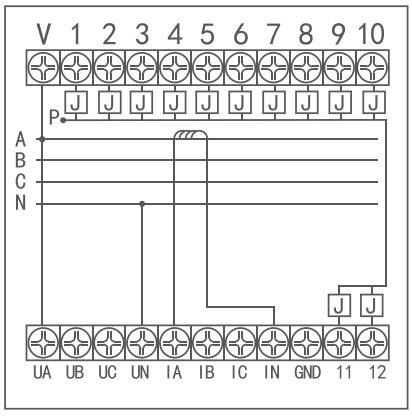


JKW5C-220V
voltage sampling wiring diagram

F

# JKW-32 Reactive Power Compensation Controller



JKW-32




JKW-32H

## General

JKW-32 series intelligent low-voltage reactive power automatic compensation controller (referred to as the controller) is a new generation of reactive power compensation controller designed and developed using dedicated power parameter acquisition chips and MCU processors. The product has an aesthetically pleasing appearance and is easy to install and use. It can be connected to intelligent capacitors through a 485 communication data line.

Standard: JB/T 9663-2013

## Type designation

| Product name | | Control circuit | Display method |
|---|---|---|---|
| JKW | - | 32 | H |
| JKW | | 32: Control circuit | No code: LED display<br>H: LCD display |

## Operating conditions

1. Ambient temperature: -20°C~+55°C
2. Relative humidity: 20%~90% at 40°C
3. Altitude: ≤2000m
4. Environmental conditions: No flammable and insulating media, conductive dust and corrosive gases exist

## Technical data

| | |
|---|---|
| Rated working voltage | AC220V±20% |
| Frequency | 50Hz |
| Power consumption | ≤10VA |
| Sampling current analog | ≤5A |
| Sensitivity | ≤0.1Ω |
| Action error | ≤200mA |
| Clock error | ≤±2.0% |
| Current analog input impedance | <1s/d |
| Measurement accuracy | Voltage, current, power factor 1.0 level, reactive power,active power accuracy higher than 2.0 level |
| Protection degree | IP30 |

## Overall and mounting dimensions (mm)

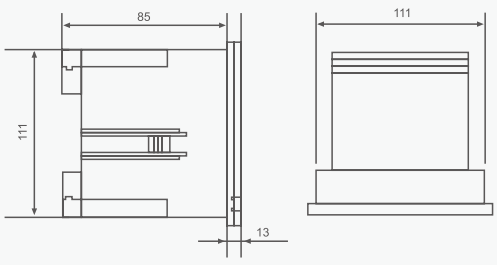


| Overall dimensions and opening dimensions | Mounting hole size |
|---|---|
| 120mm(W)×120mm(H)×85mm(D) | 111mm(W)×111mm(H) |

# JKW7C Automatic Reactive Power Compensation Controller




## General

This automatic reactive power compensation controller.It is suitable for automatic regulation of capacitor compensation device in low voltage distribution system (hereinafter referred to as controller).It makes the power factor reach the user's predetermined state, improves the utilization efficiency of the power transformer, reduces the line loss, and improves the voltage value of the power supply, so as to improve the economic and social benefits.

## Type designation

JKW7C - 12 220

| Product name | | Control Circuit | Rated Voltage |
|---|---|---|---|
| JKW7C | - | 12 | 220 |
| Product name | | 12 | 220:220V<br>380:380V |

## Operating conditions

1. The altitude is not higher than 2500 meters.
2. Ambient temperature - 25 °C ~ + 50 °C.
3. The air humidity is not more than 50% at 40 °C and 90% at 20 °C.
4. There is no corrosive gas, conductive dust and flammable and explosive media in the surrounding environment.
5. There is no violent vibration at the installation site.

## Technical data

1. Rated working voltage: AC 220V 45-65Hz
2. Rated working current: AC 0-5A 45-65Hz
3. Output contact capacity: AC 220V 5A
4. Display power factor lag: 0.001 - lead 0.001
5. Measurement of reactive power: 0-9999kvar
6. Sensitivity: 50mA
7. Protection class enclosure: IP40

# JKW7C Automatic Reactive Power Compensation Controller

## Wiring diagram

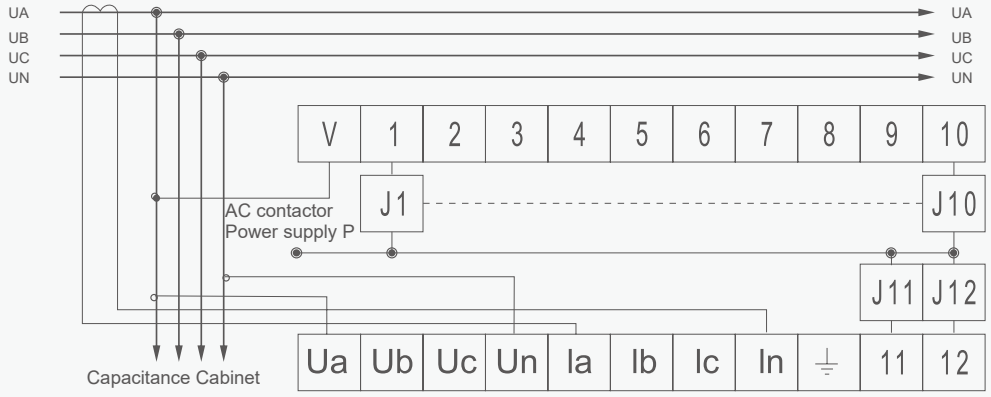


Ub, Uc Voltage signal input

Ia, In Current signal input

V Control Output Sub-Common

If the contactor is 380V, the P-point connects to B or C phase.

If the contactor is 220V,the P-point connects to N-phase

F