Industrial Equipment & Switches

Push-button Switch



Page E01
LAY5



Page E09
LAY4



Page E13
XB5



Page E16
XB7



Page E17
COB



Page E17
COB



Page E19
YCGB

Indicator Light



Page E23
AD22



Page E26
AD16



Page E28
BD8070

Digital Display Indicator



Page E29
AD16



Page E33
Button Attachment

Button Box



Page E36
LAY5-B



Page E37
LAY5-BS

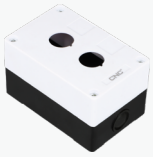

Page E37
LAY5

Limit Switch



Page E38
XCK-M



Page E40
XCK-J



Page E42
XCK-P



Page E44
XCK-T



Page E46
XCK-S



Page E48
ME



Page E51
MEA



Page E53
HL



Page E55
WL



Page E58
Z-15



Page E61
D4MC



Page E63
AZ

Industrial Equipment & Switches

Micro Switch



Page E65
V-15

Pedal Switch



Page E67
SFMS-1

Universal Changeover Switch



Page E69
LW28



Page E71
LW26



Page E73
EP



Page E75
CS-68

Padlock Type Power Cut Off Switch



Page E76
LW28GS
Padlock Type Power Cut Off Switch



Page E77
LW26GS
Padlock Type Power Cut Off Switch



Page E78
D11-3P/4P
Power Off the Combination Switch

Sealed Type Power Cut Off Switch



Page E80
LW28,YCD12
(IP54) (IP65)

Warning Light



Page E83
Warning Light

Siren & Buzzer



Page E88
Siren & Buzzer

LAY5 Push-button Switch

Button switch

	Elucidation	Color	Contact type NO	Contact type NC	Model	Weight	Size
			NO	NC		(kg)	
 LAY5-BA..	Flat push-button	White	1	-	LAY5-BA11	0.0560	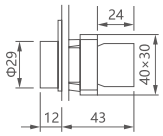
		Black	1	-	LAY5-BA21	0.0560	
		Green	1	-	LAY5-BA31	0.0560	
		Yellow	1	-	LAY5-BA51	0.0560	
		Blue	1	-	LAY5-BA61	0.0560	
		Black	-	1	LAY5-BA22	0.0580	
		Red	-	1	LAY5-BA42	0.0580	
		Green	1	1	LAY5-BA35	0.0694	
		Red	1	1	LAY5-BA45	0.0694	
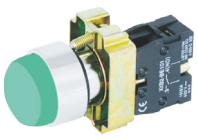 LAY5-BL..	Extended button	Black	1	-	LAY5-BL21	0.0596	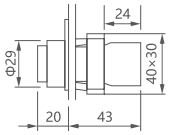
		Green	1	-	LAY5-BL31	0.0596	
		Yellow	1	-	LAY5-BL51	0.0596	
		Blue	1	-	LAY5-BL61	0.0596	
		Black	-	1	LAY5-BL22	0.0600	
		Red	-	1	LAY5-BL42	0.0600	
		Green	1	1	LAY5-BL35	0.0731	
		Red	1	1	LAY5-BL45	0.0731	
 LAY5-BP..	Button with waterproof button	Black	1	-	LAY5-BP21	0.0572	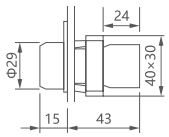
		Green	1	-	LAY5-BP31	0.0572	
		Yellow	1	-	LAY5-BP51	0.0572	
		Blue	1	-	LAY5-BP61	0.0572	
		Red	-	1	LAY5-BP42	0.0592	
		Green	1	1	LAY5-BP35	0.0706	
		Red	1	1	LAY5-BP45	0.0706	

Button with sign and self-locking button

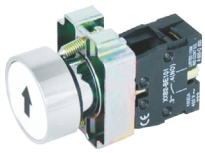 LAY5-BA..	Flat push-button with mark		1	-	LAY5-BA3311	0.0589	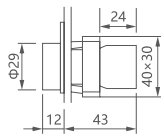
			1	-	LAY5-BA3341	0.0589	
			1	-	LAY5-BA3351	0.0589	
			-	1	LAY5-BA4322	0.0590	
			-	1	LAY5-BA4342	0.0590	
			1	1	LAY5-BA4325	0.0721	
			1	1	LAY5-BA4345	0.0721	
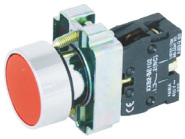 LAY5-BZ..	Seft-clock button	Red	-	1	LAY5-BZ42	0.0710	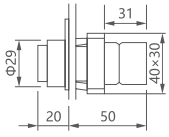
		Yellow	1	-	LAY5-BZ31	0.0710	
		Black	1	-	LAY5-BZ51	0.0710	
		Green	1	-	LAY5-BZ21	0.0710	
		Blue	1	-	LAY5-BZ61	0.0710	

LAY5 Push-button Switch

Mushroom head emergency stop button

	Elucidation	Color	Contact type NO	Contact type NC	Model	Weight	Size
			NO	NC		(kg)	
 LAY5-BC..	Φ40mm Mushroom head button	Black	1	-	LAY5-BC21	0.0774	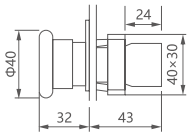
		Green	1	-	LAY5-BC31	0.0774	
		Yellow	1	-	LAY5-BC51	0.0774	
		Blue	1	-	LAY5-BC61	0.0774	
		Red	-	1	LAY5-BC42	0.0774	
		Green	1	1	LAY5-BC35	0.0908	
		Red	1	1	LAY5-BC45	0.0908	
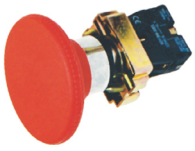 LAY5-BR..	Φ60mm Mushroom head button	Black	1	-	LAY5-BR21	0.0901	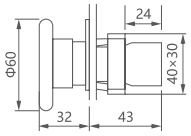
		Green	1	-	LAY5-BR31	0.0901	
		Red	-	1	LAY5-BR42	0.0901	
		Green	1	1	LAY5-BR35	0.0985	
		Red	1	1	LAY5-BR45	0.0985	
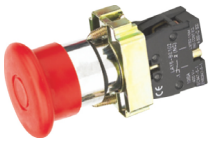 LAY5-BT..	Push-pull button	Φ40	-	1	LAY5-BT42	0.1180	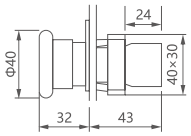
		Φ40	1	1	LAY5-BT45	0.1180	
		Φ60	-	1	LAY5-BX42	0.1810	
		Φ60	1	1	LAY5-BX45	0.0440	
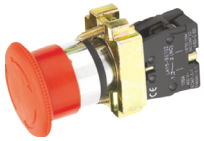 LAY5-BS..	Emergency stop push button	Φ30	-	1	LAY5-BS442	0.0767	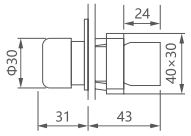
		Φ30	1	1	LAY5-BS445	0.0781	
		Black Φ40	1	-	LAY5-BS521	0.0800	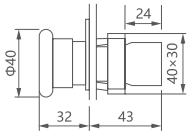
		Green Φ40	1	-	LAY5-BS531	0.0800	
		Red Φ40	-	1	LAY5-BS542	0.0935	
		Red Φ40	1	1	LAY5-BS545	0.0935	
 LAY5-BS..		Black Φ60	1	-	LAY5-BS621	0.0910	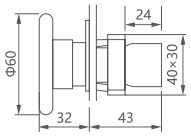
		Green Φ60	1	-	LAY5-BS631	0.0910	
		Red Φ60	-	1	LAY5-BS642	0.0910	
		Red Φ60	1	1	LAY5-BS645	0.1030	
	Emergency stop push button with key	Φ40	-	1	LAY5-BS142	0.1097	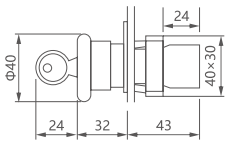
		Φ40	1	1	LAY5-BS145	0.1235	
		Φ40	1	1	LAY5-BS9445	0.1235	

E

LAY5 Push-button Switch

Selector switch

	Elucidation	Color	Contact type NO	Contact type NC	Model	Weight	Size
			NO	NC		(kg)	
 LAY5-BD..	2 position select switch		1	-	LAY5-BD21	0.0669	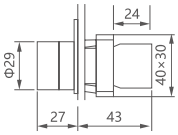
			1	1	LAY5-BD25	0.0803	
			1	-	LAY5-BD41	0.0669	
			1	1	LAY5-BD45	0.0803	
	3 position select switch		2	-	LAY5-BD33	0.0826	
			2	-	LAY5-BD53	0.0826	
			2	-	LAY5-BD73	0.0826	
 LAY5-BJ..	2 position with long handle		1	-	LAY5-BJ21	0.0701	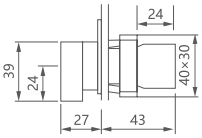
			1	1	LAY5-BJ25	0.0835	
			1	-	LAY5-BJ41	0.0701	
			1	1	LAY5-BJ45	0.0835	
	3 position with long handle		2	-	LAY5-BJ33	0.0832	
			2	-	LAY5-BJ53	0.0832	
			2	-	LAY5-BJ73	0.0832	
 LAY5-BG..	2 position select switch with key		1	-	LAY5-BG21	0.0925	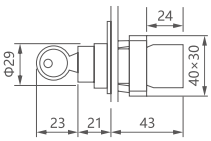
			1	1	LAY5-BG25	0.1090	
			1	-	LAY5-BG41	0.0925	
			1	1	LAY5-BG45	0.1090	
			1	-	LAY5-BG61	0.0925	
			1	1	LAY5-BG65	0.1090	
	3 position select switch with key		2	-	LAY5-BG33	0.1090	
			2	-	LAY5-BG53	0.1090	
			2	-	LAY5-BG03	0.1090	
			2	-	LAY5-BG73	0.1090	

Cross main command switch

 LAY5-B2-PA..	Locked	-	2		LAY5-B2-PA12	0.0467	
	Spring return	2	-		LAY5-B2-PA22	0.0467	
	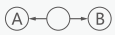						
	Locked	2	2		LAY5-B2-PA14	0.0525	
	Spring return	2	2		LAY5-B2-PA24	0.0525	
 LAY5-B2-PA..	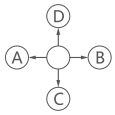						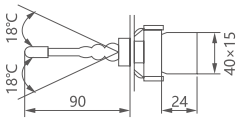
 LAY5-C402	Four-way reset	4	-		LAY5-C402	0.193	
	Four-way locking	4	-		LAY5-C4022	0.193	
	Two-way reset	2	-		LAY5-C201	0.190	
	Two-way lock	2	-		LAY5-C2011	0.190	

LAY5 Push-button Switch

Selector switch with light

	Elucidation	Color	Contact type NO	Contact type NC	Model	Weight	Size
			NO	NC		(kg)	
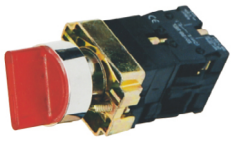 LAY5-BK..	2 position select switch with light	Green	1	1	LAY5-BK2365	0.0907	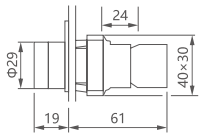
		Red	1	1	LAY5-BK2465	0.0907	
		Yellow	1	1	LAY5-BK2565	0.0907	
		Blue	1	1	LAY5-BK2665	0.0907	
		Clean	1	1	LAY5-BK2765	0.0907	

Push button switch with light

			NO	NC		(kg)	
 LAY5-BW..	The direct type 	White	1	-	LAY5-BW3161	0.0769	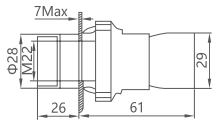
		Green	1	-	LAY5-BW3361	0.0799	
		Red	-	1	LAY5-BW3462	0.0769	
		Yellow	1	-	LAY5-BW3561	0.0769	
		Blue	1	-	LAY5-BW3661	0.0769	
	RC type 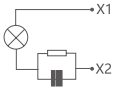	White	1	-	LAY5-BW3171	0.0832	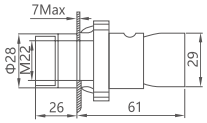
		Green	1	-	LAY5-BW3371	0.0832	
		Red	-	1	LAY5-BW3472	0.0832	
		Yellow	1	-	LAY5-BW3571	0.0832	
		Blue	1	-	LAY5-BW3671	0.0382	
 LAY5-BZ..	Lamp stop 	White	1	-	LAY5-BZ3161	0.0982	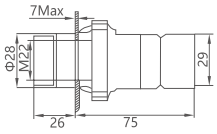
		Green	1	-	LAY5-BZ3361	0.0982	
		Red	-	1	LAY5-BZ3462	0.0982	
		Yellow	1	-	LAY5-BZ3561	0.0982	
		Blue	1	-	LAY5-BZ3661	0.0982	

Double key button switch

			NO	NC		(kg)	
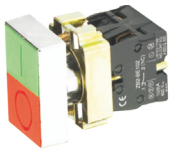 LAY5-BL..	Double key button switch		1	1	LAY5-BL8325	0.0721	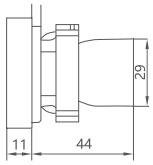
			1	1	LAY5-BL8425	0.0721	
 LAY5-BW..	Double key square head light button switch		1	1	LAY5-BW8365	0.0986	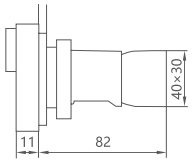
			1	1	LAY5-BW8465	0.0986	

E

LAY5 Push-button Switch

Accessories of the button

	Elucidation	Contact type NO	Contact type NC	Model	Weight	Size
		NO	NC		(kg)	
 LAY5-BE..	Auxiliary/Replaceable contact. Spiral pressing electronic	1	-	LAY5-BE101		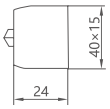
		-	1	LAY5-BE102		
 LAY5-BZ..	The base with 1/2 contact module is for button,2-bit selector switch and key switch	1	-	LAY5-BZ101		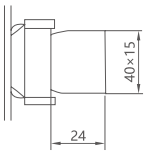
		-	1	LAY5-BZ102		
		2	-	LAY5-BZ103		
		-	2	LAY5-BZ104		
		1	1	LAY5-BZ105		

E

Cross main command switch

			Contact type NO	Contact type NC	Model	Weight	
 LAY5-EA..	Flat push button	White	1	-	LAY5-EA11	0.0296	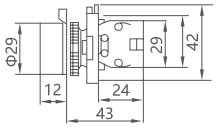
		Black	1	-	LAY5-EA21	0.0296	
		Green	1	-	LAY5-EA31	0.0296	
		Yellow	1	-	LAY5-EA51	0.0296	
		Blue	1	-	LAY5-EA61	0.0296	
		Black	-	1	LAY5-EA22	0.0300	
		Red	-	1	LAY5-EA42	0.0300	
		Green	1	1	LAY5-EA35	0.0430	
		Red	1	1	LAY5-EA45	0.0430	
 LAY5-EL..	Extended push button	Black	1	-	LAY5-EL21	0.0326	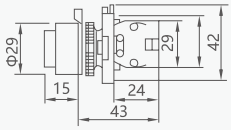
		Green	1	-	LAY5-EL31	0.0326	
		Yellow	1	-	LAY5-EL51	0.0326	
		Blue	1	-	LAY5-EL61	0.0326	
		Black	-	1	LAY5-EL22	0.0334	
		Red	-	1	LAY5-EL42	0.0334	
		Green	1	1	LAY5-EL35	0.0435	
		Red	1	1	LAY5-EL45	0.0435	
 LAY5-EP..	Push button with waterproof	Black	1	-	LAY5-EP21	0.0313	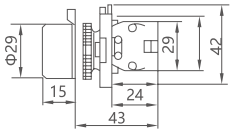
		Green	1	-	LAY5-EP31	0.0313	
		Yellow	1	-	LAY5-EP51	0.0313	
		Blue	1	-	LAY5-EP61	0.0313	
		Red	-	1	LAY5-EP42	0.0316	
		Green	1	1	LAY5-EP35	0.0316	
		Red	1	1	LAY5-EP45	0.0451	

LAY5 Push-button Switch

Button with sign

	Elucidation	Color	Contact type NO	Contact type NC	Model	Weight	Size
			NO	NC		(kg)	
 LAY5-EA..	Flat push button with mark	Green	1	-	LAY5-EA3311	0.0312	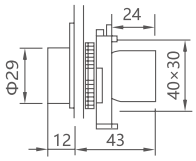
		White	1	-	LAY5-EA3341	0.0312	
		Black	1	-	LAY5-EA3351	0.0312	
		Red	-	1	LAY5-EA4322	0.0317	
		Red	-	1	LAY5-EA4342	0.0317	
		Red	1	1	LAY5-EA4325	0.0449	
		Red	1	1	LAY5-EA4345	0.0449	

Mushroom head emergency stop button

	Elucidation	Color	Contact type NO	Contact type NC	Model	Weight	Size
 LAY5-EC..	Φ40mm Mushroom head button	Black	1	-	LAY5-EC21	0.0500	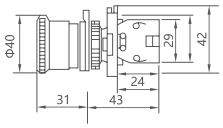
		Green	1	-	LAY5-EC31	0.0500	
		Yellow	1	-	LAY5-EC51	0.0500	
		Blue	1	-	LAY5-EC61	0.0500	
		Red	-	1	LAY5-EC42	0.0505	
		Green	1	1	LAY5-EC35	0.0641	
		Red	1	1	LAY5-EC45	0.0641	
 LAY5-ES...	Φ60mm Mushroom head button	Black	1	-	LAY5-ER21	0.0600	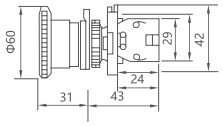
		Red	-	1	LAY5-ER42	0.0600	
		Black	1	1	LAY5-ER25	0.0735	
		Red	1	1	LAY5-ER45	0.0735	
 LAY5-ES...	Emergency stop switch	Φ30	-	1	LAY5-ES442	0.0500	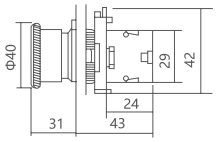
		Φ40	-	1	LAY5-ES542	0.0524	
		Φ40	1	1	LAY5-ES545	0.0745	
		Φ60	-	1	LAY5-ES642	0.0608	
		Φ60	1	1	LAY5-ES645	0.0745	
	Emergency stop switch with key	Φ40	-	1	LAY5-ES142	0.0800	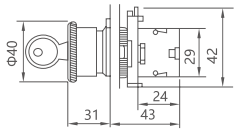
		Φ40	1	1	LAY5-ES145	0.0912	

E

LAY5 Push-button Switch

Selector switch

	Elucidation	Color	Contact type NO	Contact type NC	Model	Weight	Size
			NO	NC		(kg)	
 LAY5-ED..	2 position maintain		1	-	LAY5-ED21	0.0383	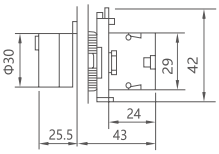
			1	1	LAY5-ED25	0.0520	
	2 position self-return		1	-	LAY5-ED41	0.0383	
			1	1	LAY5-ED45	0.0520	
	3 position maintain		2	-	LAY5-ED33	0.0511	
	3 position self-return		2	-	LAY5-ED53	0.0511	
 LAY5-EG..	2 position maintain key switch		1	-	LAY5-EG21	0.0599	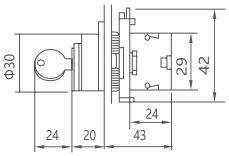
			1	1	LAY5-EG25	0.0731	
			1	-	LAY5-EG41	0.0599	
			1	1	LAY5-EG45	0.0731	
			1	-	LAY5-EG61	0.0599	
			1	1	LAY5-EG65	0.0731	
	3 position maintain key switch		2	-	LAY5-EG33	0.0727	
			2	-	LAY5-EG53	0.0727	
			2	-	LAY5-EG03	0.0727	
			2	-	LAY5-EG73	0.0727	

The spring type button with light

			NO	NC		(kg)	
 LAY5-EW..	Direct 	Green	1	-	LAY5-EW3361	0.0583	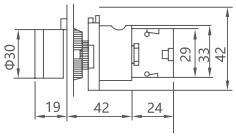
		Red	-	1	LAY5-EW3462	0.0527	
		Yellow	1	-	LAY5-EW3561	0.0583	
		Blue	1	-	LAY5-EW3661	0.0583	
	RC type 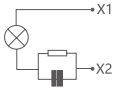	Green	1	-	LAY5-EW3371	0.0583	
		Red	1	-	LAY5-EW3471	0.0583	
		Yellow	1	-	LAY5-EW3571	0.0583	
		Blue	1	-	LAY5-EW3671	0.0583	
 LAY5-EV..	Direct 	Green			LAY5-EV63	0.0616	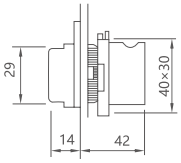
		Red			LAY5-EV64	0.0388	
		Yellow			LAY5-EV65	0.0388	
		Blue			LAY5-EV66	0.0388	
	RC type 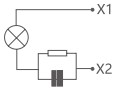	Green			LAY5-EV73	0.0750	
		Red			LAY5-EV74	0.0750	
		Yellow			LAY5-EV75	0.0750	
		Blue			LAY5-EV76	0.0750	

LAY5 Push-button Switch

Double key button switch

	Elucidation	Color	Contact type NO	Contact type NC	Model	Weight (kg)	Size
 LAY5-EL8..	Double key button switch 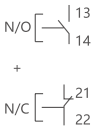	IP40			LAY5-EL8325	0.0485	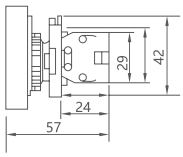
		IP40			LAY5-EL8325	0.0497	
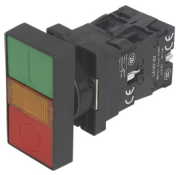 LAY5-EW8..	Double key square head light/button direct type 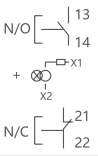	IP40			LAY5-EL8325	0.0485	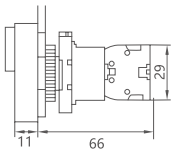
					LAY5-BK2565	0.0497	

Accessories of the button

 LAY5-EZ..	The base with 1/2 contact module is for button,2-bit selector switch and key switch	1	-	LAY5-EZ101	0.0340	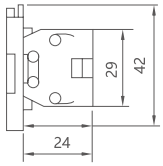
		-	1	LAY5-EZ102	0.0346	
		2	-	LAY5-EZ103	0.0476	
		-	2	LAY5-EZ104	0.0478	
		1	1	LAY5-EZ105	0.0424	

The spring type button

 LAY5-EA..	The spring type	Black	1	-	LAY5-EA121	0.0170	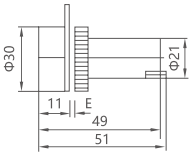
			1	1	LAY5-EA125	0.0290	
		Green	1	-	LAY5-EA131	0.0170	
			1	1	LAY5-EA135	0.0290	
		Red	-	1	LAY5-EA142	0.0170	
			1	1	LAY5-EA145	0.0290	
		Yellow	1	-	LAY5-EA151	0.0170	
		Blue	1	-	LAY5-EA161	0.0170	

E

LAY4 Push-button Switch

Button switch

	Elucidation	Color	Contact type NO	Contact type NC	Model	Weight	Size
			NO	NC		(kg)	
 LAY4-BA..	Flat push-button	White	1	-	LAY4-BA11	0.0684	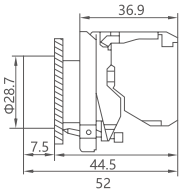
		Black	1	-	LAY4-BA21	0.0684	
		Green	1	-	LAY4-BA31	0.0684	
		Yellow	1	-	LAY4-BA51	0.0684	
		Blue	1	-	LAY4-BA61	0.0684	
		Black	-	1	LAY4-BA42	0.0684	
		Red	1	1	LAY4-BA25	0.0774	
		Green	1	1	LAY4-BA35	0.0774	
		Red	1	1	LAY4-BA45	0.0774	
 LAY4-BL..	Extended button	Green	1	-	LAY4-BL31	0.069	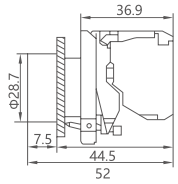
		Green	1	1	LAY4-BL35	0.078	
		Red	-	1	LAY4-BL42	0.069	
		Red	1	1	LAY4-BL45	0.078	
		White	1	-	LAY4-BL11	0.069	
		Black	1	-	LAY4-BL21	0.069	
		Blue	1	-	LAY4-BL61	0.069	
		Yellow	1	-	LAY4-BL51	0.069	
 LAY4-BP..	Button with waterproof cover	Black	1	-	LAY4-BP21	0.070	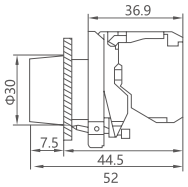
		Green	1	-	LAY4-BP31	0.070	
		Yellow	1	-	LAY4-BP51	0.070	
		Blue	1	-	LAY4-BP61	0.070	
		Red	-	1	LAY4-BP42	0.070	
		Green	1	1	LAY4-BP35	0.079	
		Red	1	1	LAY4-BP45	0.079	
 LAY4-BA....	Flat push button with mark		1	-	LAY4-BA3311	0.0589	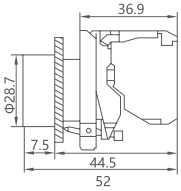
			1	-	LAY4-BA3341	0.0589	
			1	-	LAY4-BA3351	0.0589	
			-	1	LAY4-BA4322	0.0590	
			-	1	LAY4-BA4342	0.0590	
			1	1	LAY4-BA4325	0.068	
			1	1	LAY4-BA4345	0.068	
 LAY4-BW3....	Push button with light (include LED) ≤220V	White	1	-	LAY4-BW3161	0.075	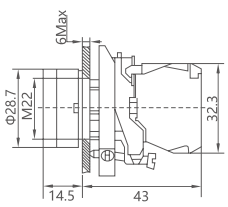
		Green	1	-	LAY4-BW3361	0.075	
		Red	-	1	LAY4-BW3462	0.075	
		Yellow	1	-	LAY4-BW3561	0.075	
		Blue	1	-	LAY4-BW3661	0.075	

LAY4 Push-button Switch

Selector switch

	Elucidation	Color	Contact type NO	Contact type NC	Model	Weight (kg)	Size
	2 position switch		1	-	LAY4-BD21	0.083	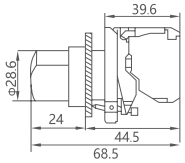
			1	1	LAY4-BD25	0.0925	
			1	-	LAY4-BD41	0.083	
			1	1	LAY4-BD45	0.0925	
	3 position switch		2	-	LAY4-BD33	0.0925	
			2	-	LAY4-BD53	0.0925	
			2	-	LAY4-BD73	0.0925	
	2 position switch with long handle		1	-	LAY4-BJ21	0.083	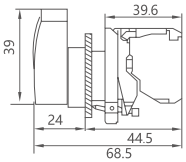
			1	1	LAY4-BJ25	0.0925	
			1	-	LAY4-BJ41	0.083	
			1	1	LAY4-BJ45	0.0925	
	3 position switch		1	-	LAY4-BJ33	0.0925	
			1	1	LAY4-BJ53	0.0925	
			1	-	LAY4-BJ73	0.0925	
	2 position switch with key		1	1	LAY4-BG21	0.106	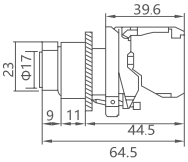
			2	-	LAY4-BG25	0.1154	
			2	-	LAY4-BG41	0.106	
			2	-	LAY4-BG45	0.1154	
			1	-	LAY4-BG61	0.106	
			1	1	LAY4-BG65	0.1154	
	3 position switch with key		1	-	LAY4-BG33	0.1154	
			1	1	LAY4-BG53	0.1154	
	Push button with light (include LED)≤220V 	White			LAY4-BV61	0.0639	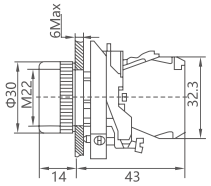
		Green			LAY4-BV63	0.0639	
		Red			LAY4-BV64	0.0639	
		Yellow			LAY4-BV65	0.0639	
		Blue			LAY4-BV66	0.0639	
	Push button with light (include LED)≤220V B: AC/DC24V M: AC/DC220V	Green	1	1	LAY4-BK123B5	0.105	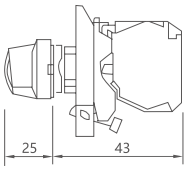
		Red	1	1	LAY4-BK124B5	0.105	
		Yellow	1	1	LAY4-BK125B5	0.105	
		Green	1	1	LAY4-BK133M5	0.105	
		Red	1	1	LAY4-BK134M5	0.105	
		Yellow	1	1	LAY4-BK135M5	0.105	
		Green	1	1	LAY4-BK153M5	0.105	
	3 Position switch with LED	Red	1	1	LAY4-BK154M5	0.105	
		Yellow	1	1	LAY4-BK155M5	0.105	
		Red	1	1	LAY4-BK143M5	0.105	

E

LAY4 Push-button Switch

Button switch

	Elucidation	Color	Contact type NO	Contact type NC	Model	Weight	Size
			NO	NC		(kg)	
 LAY4-BC..	Φ40mm Mushroom head button	Black	1	-	LAY4-BC21	0.116	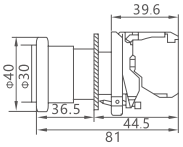
		Green	1	-	LAY4-BC31	0.116	
		Red	-	1	LAY4-BC42	0.116	
		Green	1	1	LAY4-BC35	0.1211	
		Red	1	1	LAY4-BC45	0.1211	
 LAY4-BT..	Push-pull button	Φ40	-	1	LAY4-BT42	0.12	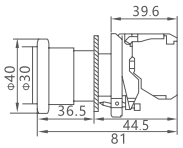
		Φ40	1	1	LAY4-BT45	0.12	
 LAY4-BS..	Emergency stop push button	Φ40	-	1	LAY4-BS542	0.105	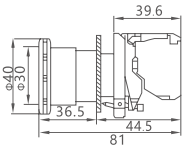
		Φ40	1	1	LAY4-BS545	0.1154	
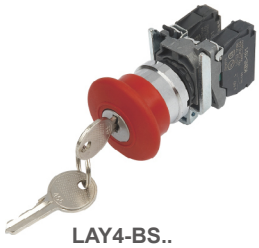 LAY4-BS..	Emergency stop push button with key	Φ40	1	-	LAY4-BS142	0.0800	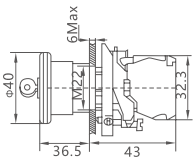
		Φ40	1	1	LAY4-BS145	0.0912	

Double key button switch

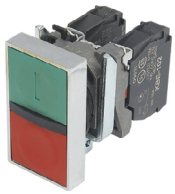 LAY4-BL8....	Double button		1	1	LAY4-BL8325		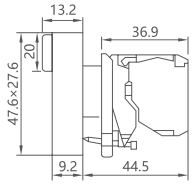
			1	1	LAY4-BL8425		
 LAY4-BW8....	Double square head with light button/Direct type with LED		1	1	LAY4-BW8365	0.0450	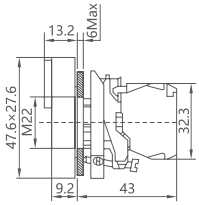
			1	1	LAY4-BW8465	0.0417	

LAY4 Push-button Switch

Button switch

Product Appearance Diagram	Product Name	Dimension Diagram
	Single Hole Button Box LAY4-BOXF-86	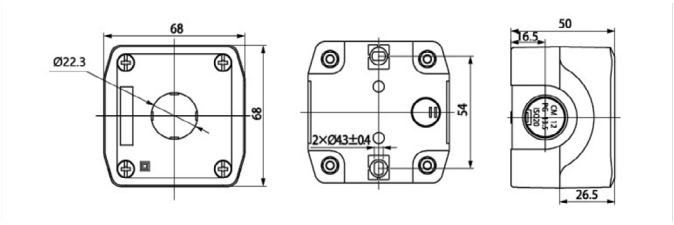
	Dual Hole Button Box LAY4-BOXF-87	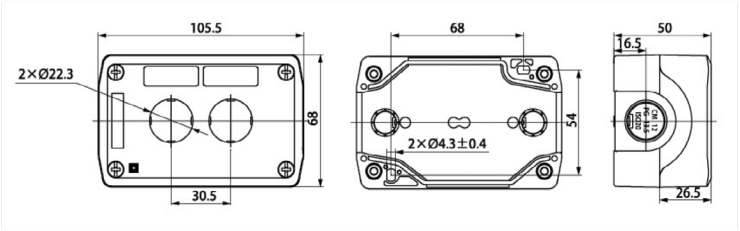
	Triple Hole Button Box LAY4-BOXF-88	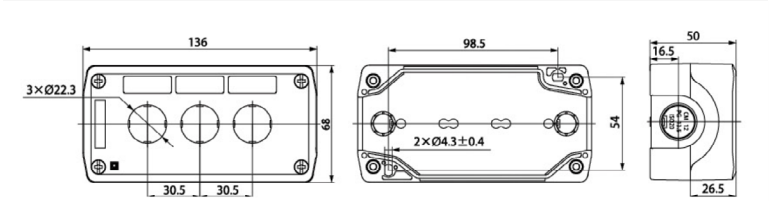
	Quadruple Hole Button Box LAY4-BOXF-89	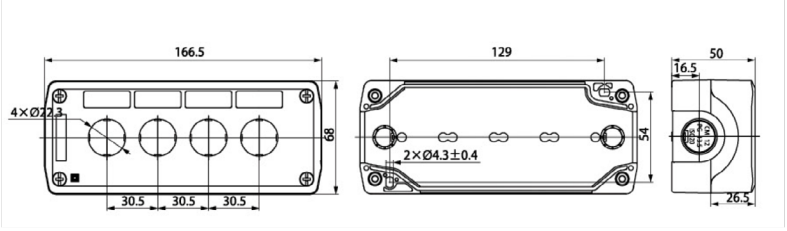

IP67 Waterproof Button Box





E

XB5 Push-button Switch

Button switch

	Elucidation	Color	Contact type NO	Contact type NC	Model	Weight	Size
			NO	NC		(kg)	
 XB5-AA..	Flat push -button	White	1	-	XB5-AA11	0.025	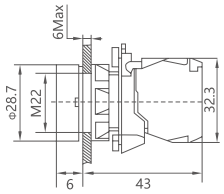
		Black	1	-	XB5-AA21	0.025	
		Green	1	-	XB5-AA31	0.025	
		Yellow	1	-	XB5-AA51	0.025	
		Blue	1	-	XB5-AA61	0.025	
		Red	-	1	XB5-AA42	0.025	
		Green	1	1	XB5-AA35	0.036	
		Red	1	1	XB5-AA45	0.036	
 XB5-AL..	push button	White	1	-	XB5-AL11	0.029	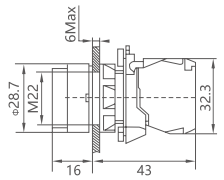
		Black	1	-	XB5-AL21	0.029	
		Green	1	-	XB5-AL31	0.029	
		Yellow	1	-	XB5-AL51	0.029	
		Blue	1	-	XB5-AL61	0.029	
		Red	-	1	XB5-AL42	0.029	
		Green	1	1	XB5-AL35	0.040	
		Red	1	1	XB5-AL45	0.040	

Selector switch

	Elucidation		NO	NC	Model	(kg)	
 XB5-AD..	2 position maintained		1	-	XB5-AD21	0.031	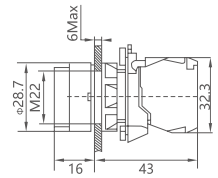
			1	1	XB5-AD25	0.042	
	2 position self-return		1	-	XB5-AD41	0.031	
			1	1	XB5-AD45	0.042	
	3 position maintained		2	-	XB5-AD33	0.042	
	3 position self-return		2	-	XB5-AD53	0.042	
 XB5-AJ..	2 position maintained		1	-	XB5-AJ21	0.035	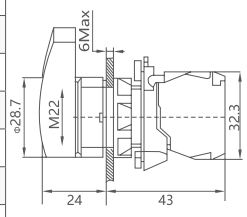
			1	1	XB5-AJ25	0.046	
			1	-	XB5-AJ41	0.035	
			1	1	XB5-AJ45	0.046	
			2	-	XB5-AJ33	0.046	
	3 position self-return		2	-	XB5-AJ53	0.046	

XB5 Push-button Switch and Indicator Light

Selector switch with key

	Elucidation	Color	Contact type NO	Contact type NC	Model	Weight	Size
			NO	NC		(kg)	
 XB5-AJ..	2 position switch with key		1	-	XB5-AG21	0.055	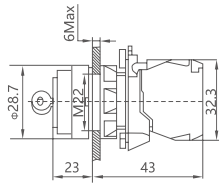
			1	1	XB5-AG25	0.066	
			1	-	XB5-AG41	0.055	
			1	1	XB5-AG45	0.066	
			1	-	XB5-AG61	0.055	
			1	1	XB5-AG65	0.066	
	3 position switch with key		2	-	XB5-AG33	0.066	
			2	-	XB5-AG53	0.066	
			2	-	XB5-AG03	0.068	
			2	-	XB5-AG73	0.068	

Mushroom head emergency stop button

 XB5-AC..	Φ40mm Mushroom head button	Black	1	-	XB5-AC21	0.050	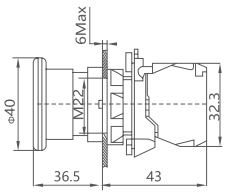
		Green	1	-	XB5-AC31	0.050	
		Yellow	1	-	XB5-AC51	0.050	
		Red	-	1	XB5-AC42	0.050	
		Green	1	1	XB5-AC35	0.061	
		Red	1	1	XB5-AC45	0.061	
 XB5-AS...	Emergency stop switch	Φ40	-	1	XB5-AS542	0.045	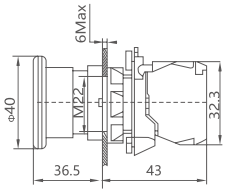
		Φ40	1	1	XB5-AS545	0.056	
 XB5-AT..	Push-pull button	Φ40	-	1	XB5-AT42	0.055	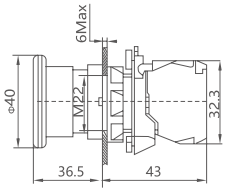
		Φ40	1	1	XB5-AT45	0.066	
 XB5-AS1..	Emergency stop switch with key	Φ40	-	1	XB5-AS142	0.065	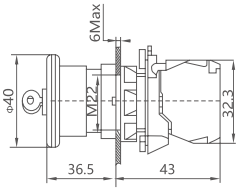
		Φ40	1	1	XB5-AS145	0.076	

E

XB5 Push-button Switch

Push button with light

	Elucidation	Color	Contact type NO	Contact type NC	Model	Weight	Size
			NO	NC		(kg)	
 XB5-AW..	Direct≤220V	White	1	-	XB5-AW3161	0.037	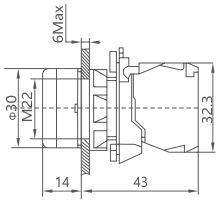
		Green	1	-	XB5-AW3361	0.037	
		Red	-	1	XB5-AW3462	0.037	
		Yellow	1	-	XB5-AW3561	0.037	
		Blue	1	-	XB5-AW3661	0.037	
 XB5-AV..		White			XB5-AV61	0.025	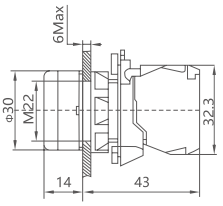
		Green			XB5-AV63	0.025	
		Red			XB5-AV64	0.025	
		Yellow			XB5-AV65	0.025	
		Blue			XB5-AV66	0.025	

Double key button switch

 XB5-AL....	Double key button switch 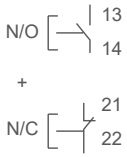	IP40		XB5-AL8325	0.038	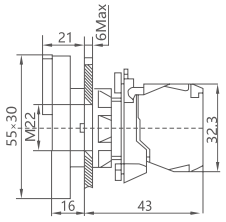
		IP40		XB5-AL8425	0.038	
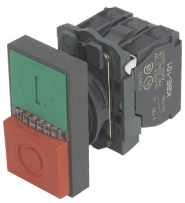 XB5-AW....	Double key square head button switch with light/ Direct type 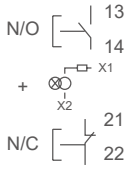	IP40		XB5-AW8465	0.051	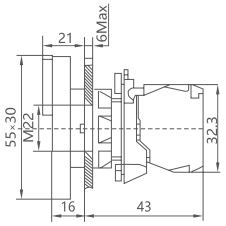
		IP40		XB5-AW8365	0.051	

XB5,XB7 Push-botton Switch

Cross main command switch

Picture	Product name	Model	Color	Contact type	
	Lock the master rocker switch	4 -	Φ 22	XB5-PA14	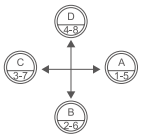
	Self-restoring master rocker switch	4 -		XB5-PA24	
	Two lock master rocker switch	2 -		XB5-PA12	
	Two self - restoring master rocker switch	2 -		XB5-PA22	
	Lift lock locks the master rocker switch	4 -		XB5-PA34	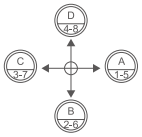
	Lift lock self - restoring master rocker switch	4 -		XB5-PA44	

Button switch

	Elucidation	Color	Contact type NO	Contact type NC	Model	Weight	Size
						(kg)	
 XB7	Spring return pushbutton	White	1	-	XB7-EA11	0.046	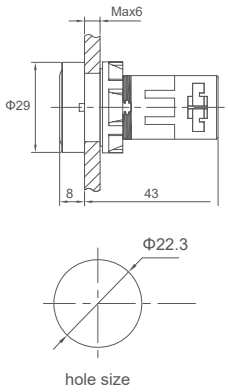
		Black	1	-	XB7-EA21	0.046	
		Green	1	-	XB7-EA31	0.046	
		Yellow	1	-	XB7-EA51	0.046	
		Black	1	1	XB7-EA25	0.046	
		Green	1	1	XB7-EA35	0.046	
		Red	1	1	XB7-EA45	0.046	
		Blue	1	1	XB7-EA65	0.046	
		Red	-	1	XB7-EA42	0.046	
		Black	2	-	XB7-EA23	0.046	
		Green	2	-	XB7-EA33	0.046	

E

COB Push-button Switch



COB-61



COB-62



COB 61H



COB 62H



COP-21JK



General

COB series is suitable for use in the circuit whose frequency is 50/60Hz, rated voltage is up to AC380V or DC250V. It is mainly used outdoor, and could be used in snowy, dusty environment, for the remote controlling of the crane, hoist and other equipments.

Operating conditions

1. Ambient temperature: -5°C~+40°C, average temperature≤+35°C in 24h
2. Altitude≤2000m
3. Air condition: when temperature is up to 40°C, the humidity should be ≤50%, and higher humidity is allowed for lower temperature, for example, humidity would be 90% when temperature is +20°C. When occasional condensation occurs due to temperature changes, special measures should be take.
4. Pollution degree :
5. Mounting type: Type II
6. No significant shake, shock and vibration
7. In the absence of explosive medium, where the medium should be not enough to corrode metal and damage the insulation.

Type designation

COB-61A

Controller button		Design number	/
COB	-	61	A
/		61: 61 21: 21	A: With main power switch H: With emergency stop switch JK: Toggle switch + emergency stop switch

COB Push-button Switch

Technical data

Contact capacity

Using category	Rated working voltage Ue(V)	Rated working current Ie(A)
AC-15	380	2.5
	220	4.5
DC-13	220	0.3
	110	0.6

Overall and mounting dimensions(mm)

Model	a	b	H1	H2	Φ
COB-61	68	50	127	224	2 or 15
COB-62	68	50	197	308	2 or 15
COB-63	68	50	257	368	2 or 15
COB-64	68	50	317	428	18
COB-65	68	50	377	488	18

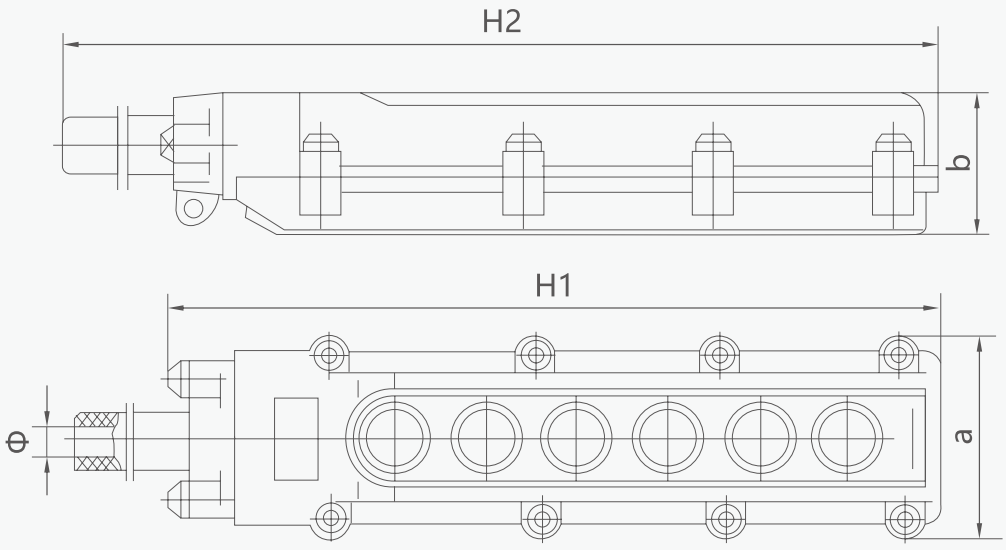

YCGB Series Metal Buttons





General

The YCGB series metal buttons are suitable for industrial control, instruments and meters, and household appliances with an operating frequency of 50Hz (60Hz) for AC voltages up to 220V and DC voltages up to 220V. They are used for controlling electrical circuits such as contactors, relays, and other signal circuits. Buttons with indicator lights are also suitable for light signal indication scenarios.

Standard: IEC 60947-5-1.

Type designation

YCGB - □ □ □ □ □ □ □

Series number	Installation dimension	Header type	Number of contacts
YCGB	□	□	□
YCGB	/	P: Flat head button Q: Ball head button G: High head button Y: Key button J: Emergency stop button X: Rotary button CJ: Connector Plug	10: 1NO 11: 1NO+1NC Note: Some products can be customized 1NC

With indicator light	Operating method	Color code	Part with light
□	□	□	□
E: Ring light Note:Signs can be customized DT: Power sign with light EDT: Power ring sign with light	Z: Self-locking Note: No annotation indicates self-resetting."	W: white R: red G: green Y: yellow S: blue	Voltage code

Note: Wiring method - J indicates terminal connection, no annotation indicates soldering foot.

Operating conditions

- Operating Temperature: -25°C to +55°C (no freezing); adequate air circulation around the light switch body is necessary.
- Operating Environment Humidity: 45-85% RH (no condensation).
- Contact Resistance: ≤50mΩ
- Insulation Resistance: ≥1000mΩ
- Maximum Voltage Resistance: 2500V, AC 50Hz, for 5 seconds.
- Vibration Resistance: 50Hz, amplitude approximately 12mm.
- Shock Resistance: Greater than 10g.
- Soldering Heat Resistance: Not exceeding 2 seconds at 320°C (or 30-watt soldering iron).
- Protection Degree: IP65

YCGB Series Metal Buttons

Techniacal data

Rated insulation voltage(Ui)			250V			
Ith Heating current			3A Current allowed when temperature does not exceed maximum rated value			
Rated voltage(Ue)			12V	24V	110V	220V
Operating current (In)	AC50/60Hz	AC-12 Resistive load and semiconductor load control	-	-	5A	3A
		AC-15 Electromagnetic load control (>72VA)	-	-	3A	2A
	DC	DC-12 Resistive load and semiconductor load control	5A	5A	1A	0.5A
		DC-13 Electromagnetic load control	2A	2A	0.2A	0.2A
Contact material			Copper-based composite silver			

Minimum applicable load: 3VAC/DC, 5mA (the applicable range depends on the working conditions and load type)

Light bulb type	Bidirectional ED bulb (AC/DC universal)
Emitting color	W B R G Y S
Service time	About 30000 hours
Rated current	About 15mA
Step-down method	Built-in resistor

Note: If unidirectional DC ED bulbs are required, they can be customized. Other voltage specifications can be customized as per requirements.

YCGB Series Metal Buttons

Overall and mounting dimensions(mm)

YCGB12G10

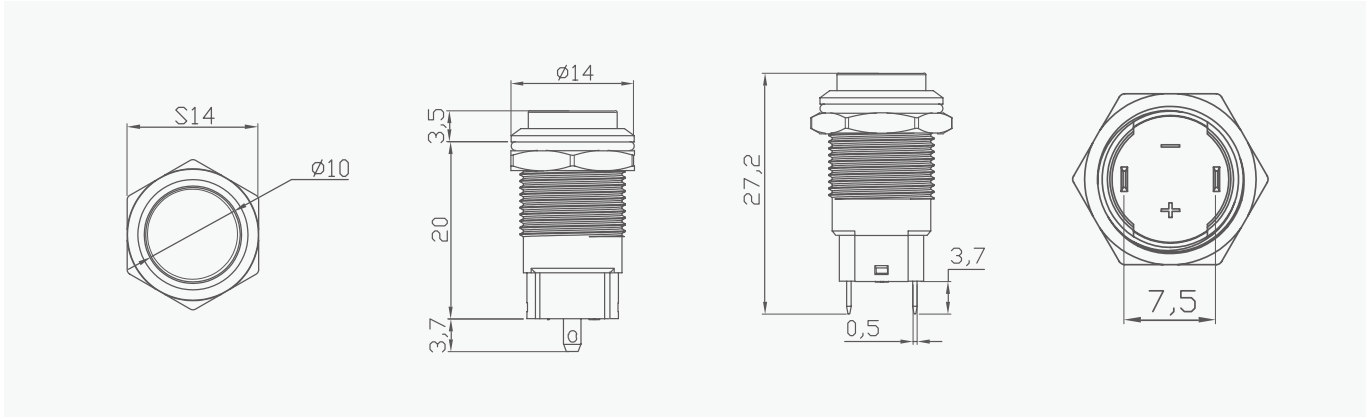

YCGB16G10

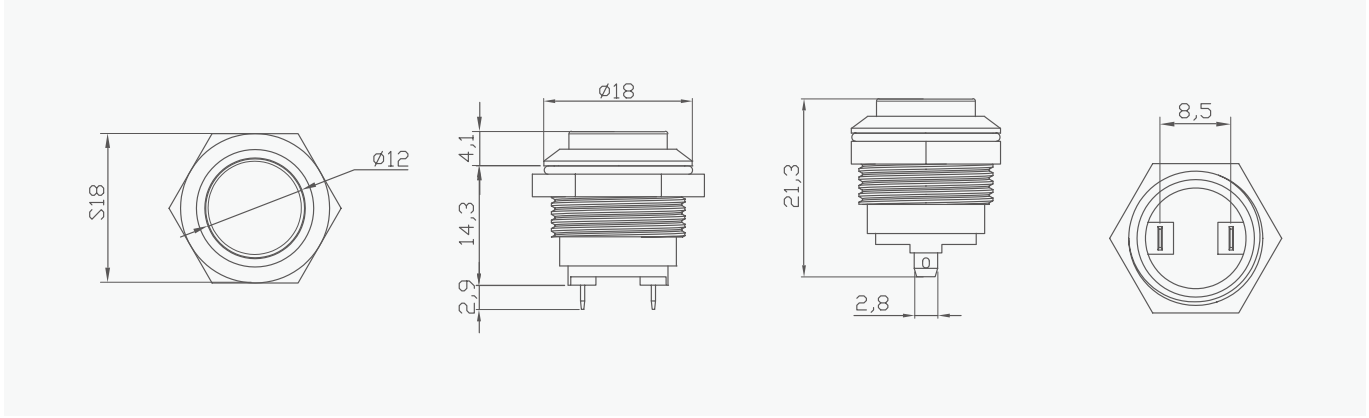

YCGB19G10

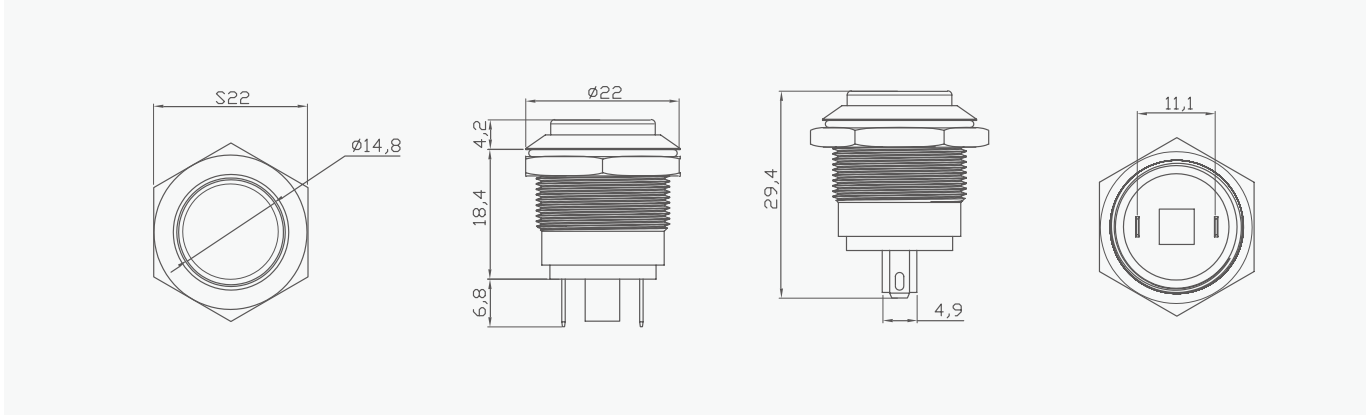

YCGB Series Metal Buttons

YCGB22G11

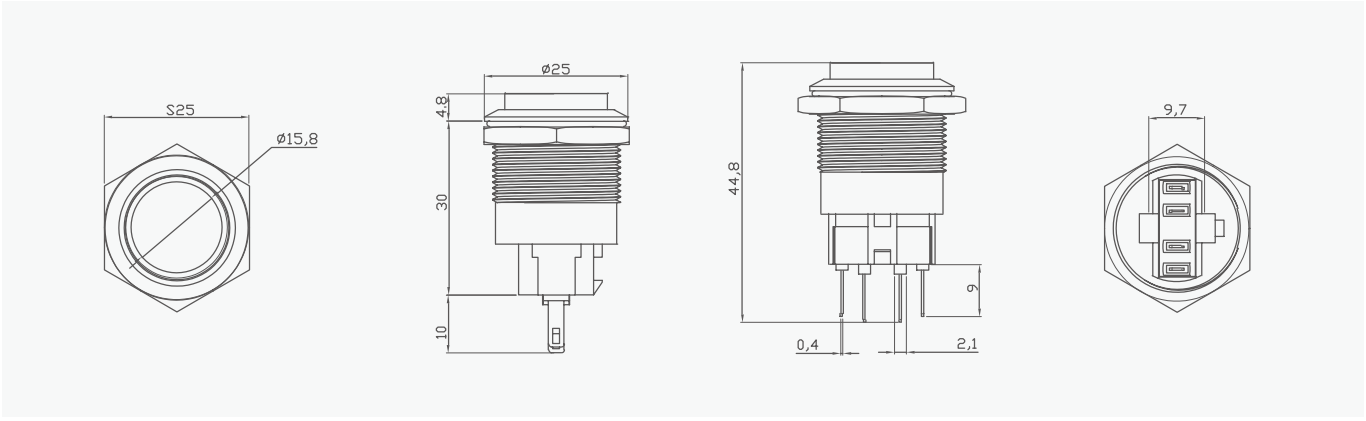

YCGB25G11

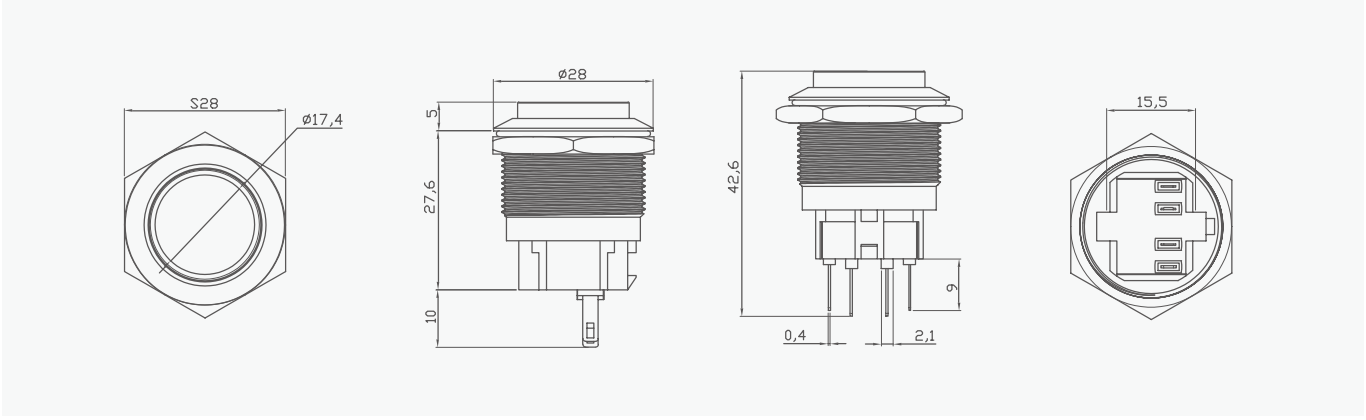

E

AD22 Indicator Light

	Elucidation	Model	Color	Data range	Size
	Grounding indicator	AD22-22W/N	Red Green 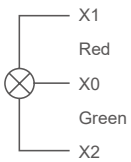	21-DC.AC 6V 22-DC.AC 12V 23-DC.AC 24V 24-DC.AC 36V 25-DC.AC 48V 26-DC.AC 110V 27-DC.AC 127V 28-DC.220V 29-FD.380V 31-AC.220V 32-AC.380V	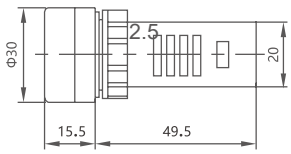
	Isolation brake position indicator	AD22-22W/G	Red Green 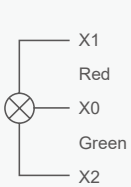	21-DC.AC 6V 22-DC.AC 12V 23-DC.AC 24V 24-DC.AC 36V 25-DC.AC 48V 26-DC.AC 110V 27-DC.AC 127V 28-DC.220V 29-FD.380V 31-AC.220V 32-AC.380V	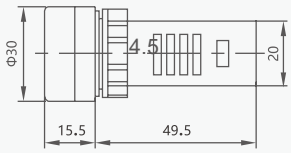
	Circuit breaker position indicator	AD22-22W/D	Red Green 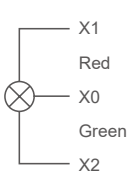	21-DC.AC 6V 22-DC.AC 12V 23-DC.AC 24V 24-DC.AC 36V 25-DC.AC 48V 26-DC.AC 110V 27-DC.AC 127V 28-DC.220V 29-FD.380V 31-AC.220V 32-AC.380V	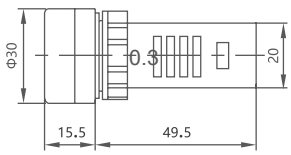
	Double color indicator light	AD22-22SS	Red Green 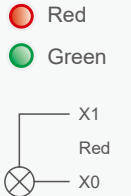	21-DC.AC 6V 22-DC.AC 12V 23-DC.AC 24V 24-DC.AC 36V 25-DC.AC 48V 26-DC.AC 110V 27-DC.AC 127V 28-DC.220V 29-FD.380V 31-AC.220V 32-AC.380V	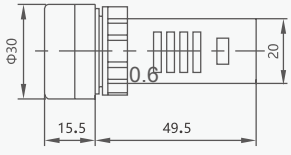

AD22 Indicator Light

Semi-conductor economy energy indicator (LED)

	Elucidation	Color	Model	Weight (kg)	Size
 AD22-22AS	Contain LED New type	Green	AD22-22AS G	0.0193	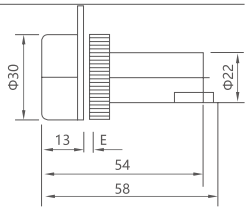
		Red	AD22-22AS R	0.0193	
		Yellow	AD22-22AS Y	0.0193	
		Blue	AD22-22AS B	0.0193	
		White	AD22-22AS W	0.0193	
 AD22-22BS	The LED electronics economy energy indicator Install size Φ22 (The LED has been preinstalled as one and cannot be split)	Green	AD22-22BS G	0.0203	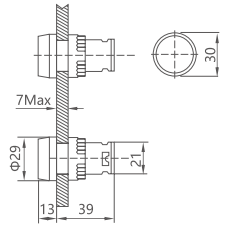
		Red	AD22-22BS R	0.0203	
		Yellow	AD22-22BS Y	0.0203	
		Blue	AD22-22BS B	0.0203	
		White	AD22-22BS	0.0203	
 AD22-22CS	The LED electronics economy energy indicator Install size Φ22 (The LED has been preinstalled as one and cannot be split)	Green	AD22-22CS G	0.0185	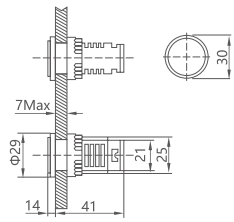
		Red	AD22-22CS R	0.0185	
		Yellow	AD22-22CS Y	0.0185	
		Blue	AD22-22CS B	0.0185	
		White	AD22-22CS W	0.0185	
 AD22-22DS	The LED electronics economy energy indicator Install size Φ22 (The LED has been preinstalled as one and cannot be split)	Green	AD22-22DS G	0.0212	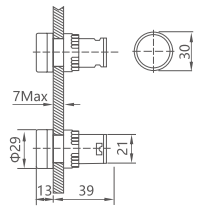
		Red	AD22-22DS R	0.0212	
		Yellow	AD22-22DS Y	0.0212	
		Blue	AD22-22DS B	0.0212	
		White	AD22-22DS W	0.0212	
 AD22-22ES	The LED electronics economy energy indicator Install size Φ22 (The LED has been preinstalled as one and cannot be split)	Green	AD22-22ES G	0.0200	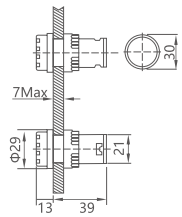
		Red	AD22-22ES R	0.0200	
		Yellow	AD22-22ES Y	0.0200	
		Blue	AD22-22ES B	0.0200	
		White	AD22-22ES W	0.0200	
 AD16-16DS	The LED electronics economy energy indicator Install size Φ16 (The LED has been preinstalled as one and cannot be split)	Green	AD16-16DS G	0.0182	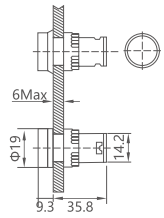
		Red	AD16-16DS R	0.0182	
		Yellow	AD16-16DS Y	0.0182	
		Blue	AD16-16DS B	0.0182	
		White	AD16-16DS W	0.0182	

E

AD22 Indicator Light

Semi-conductor economy energy indicator (LED)

	Elucidation	Color	Model	Weight (kg)	Size
 AD22-16SM AD22-22SM	Φ16M type Buzzer	Green	AD22-16SM		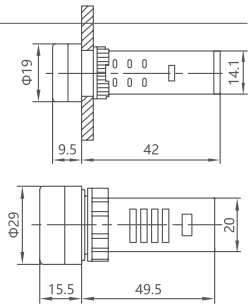
		Red		0.0024	
	Buzzer	Yellow	AD22-22FM		
	Flash Buzzer	Blue	AD22-22SM	0.0024	
		White			
	Note: The color of AD16-22SM Buzzer is only ● Black.				
 AD22-16CS	The LED electronics economy energy indicator Install size Φ16 (The LED has been preinstalled as one and cannot be split)	Green	AD22-22CS G	0.0190	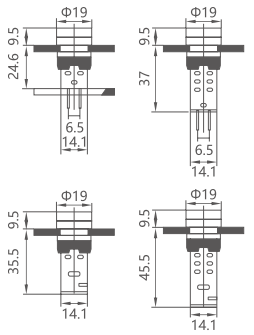
		Red	AD22-22CS R	0.0190	
		Yellow	AD22-22CS Y	0.0190	
		Blue	AD22-22CS B	0.0190	
		White	AD22-22CS W	0.0190	
 AD22-22F	The LED electronics economy energy indicator Install size Φ22 (The LED has been preinstalled as one and cannot be split)	Green	AD22-22F G	0.0203	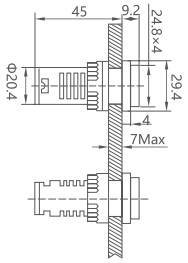
		Red	AD22-22F R	0.0203	
		Yellow	AD22-22F Y	0.0203	
		Blue	AD22-22F B	0.0203	
		White	AD22-22F W	0.0203	
 AD22-22HS	The LED electronics economy energy indicator Install size Φ22 (The LED has been preinstalled as one and cannot be split)	Green	AD22-22HS G	0.0190	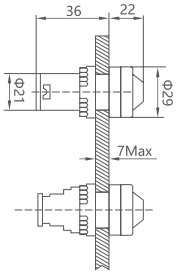
		Red	AD22-22HS R	0.0190	
		Yellow	AD22-22HS Y	0.0190	
		Blue	AD22-22HS B	0.0190	
		White	AD22-22HS W	0.0190	
 AD22-30D	The LED electronics economy energy indicator Install size Φ30 (The LED has been preinstalled as one and cannot be split)	Green	AD22-30D G	0.0250	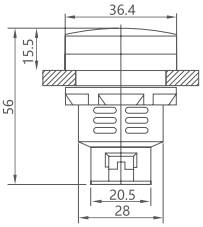
		Red	AD22-30D R	0.0250	
		Yellow	AD22-30D Y	0.0250	
		Blue	AD22-30D B	0.0250	
		White	AD22-30D W	0.0250	

AD16 Indicator Light

	Elucidation		Model	Color	Action type	Size
	Indicator Φ16	Round Square Rectangle	AD16-YXD AD16-FXD AD16-JXD	White Green Red Yellow Blue	Indicator light	R/G/Y/B/W could be with LED 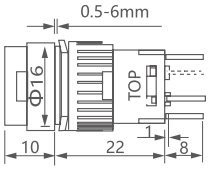 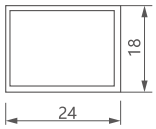 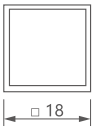 
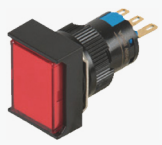	Push button switch Φ16	Round Square Rectangle	AD16-11Y AD16-22Y AD16-11F AD16-22F AD16-11J AD16-22J	White Green Red Yellow Blue	Spring type	
	Self-locking Push button Φ16	Round Square Rectangle	AD16-11TY AD16-22TY AD16-11TF AD16-22TF AD16-11TJ AD16-22TJ	White Green Red Yellow Blue	Self-locking	
	Push button switch with light Φ16	Round Square Rectangle	AD16-11YD AD16-22YD AD16-11FD AD16-22FD AD16-11JD AD16-22JD	White Green Red Yellow Blue	Push button with light	
	Self-locking button with light Φ16	Round Square Rectangle	AD16-11TYD AD16-22TYD AD16-11TFD AD16-22TFD AD16-11TJD AD16-22TJD		Self-locking with light	

E

AD16 Indicator Light

	Elucidation		Model	Color	Action type	Size
	Select switch Φ16	Round 2 position Square 2 position Rectangle 2 position	AD16-11X/2 AD16-11FX/2 AD16-11JX/2	Black Green Red		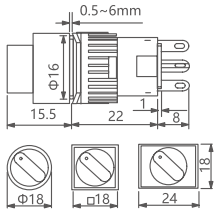
		Round 3 position Square 3 position Rectangle 3 position	AD16-22X/3 AD16-22FX/3 AD16-22JX/3			
	Mushroom push button switch spring Φ16		AD16-11M AD16-22M	Green Red Yellow Blue	Spring type	R/G/Y/B could be with LED 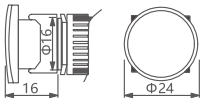
	Mushroom push button switch maintain Φ16		AD16-11MT AD16-22MT		Muintain type	
	Mushroom push button with light Φ16		AD16-11MD AD16-22MD		Spring type	
	Round key push button switch Φ16	2 position	AD16-11Y/2	Black		2 key All keys generic Protection degree IP40 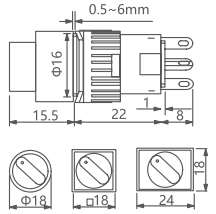
		2 position	AD16-22Y/2			
		3 position	AD16-22Y/3			
	Square key push button switch Φ16	2 position	AD16-11FY/2			
		2 position	AD16-22FY/2			
		3 position	AD16-22FY/3			
	Rectangle key push button switch Φ16	2 position	AD16-11JY/2			
		2 position	AD16-22JY/2			
		3 position	AD16-22JY/3			
	Push button switch with light Φ16 Round Square Rectangle		AD16-11ZS	Green Red	Auto-locking type	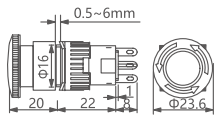
			AD16-22ZS			
 	Buzzer Φ16		AD16-Y-B	Black	-	Normal <24V
			AD16-F-B		-	
			AD16-J-B		-	

BD8070 Series Explosion-proof Indicator Light



General

The BD8070 series accessories are designed to be used in conjunction with increased safety enclosures, forming a structurally complete explosion-proof product. These accessories should not be used independently in explosive environments and are suitable for explosion-proof distribution, control, and starting products in production.

Type designation

BD8070 AC220V/380V IP66

Model	Voltage	Water proof rating
BD8070	AC220V/380V	IP66
/	/	/

Use environment

- Environmental temperature: -40°C to +60°C
- Operating temperature: -40°C to +100°C
- Protection degree: IP66

Techniacal data

- Explosion protection marking: Ex db eb IIC Gb;Ex tb IIIC Db
- Voltage: AC/DC12V,24V,36V,110V,220V,AC220-380V
- Color codes: R for red, G for green, Y for yellow, W for white, B for blue

Overall and mounting dimensions



E

AD16 Digital Display Indicator

	Elucidation	Model	Color	Date range	Size
	Indicator Voltmeter	AD16-22DV	White Green Red Yellow Blue	AC20~500V	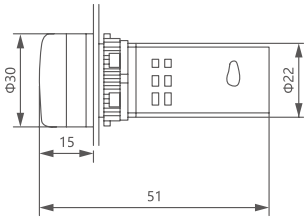
	Indicator Ammeter	AD16-22DA	White Green Red Yellow Blue	0~100A Max AC380	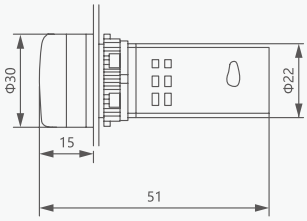
	Indicator Frequencyy Meter	AD16-22DHz	White Green Red Yellow Blue	0~99Hz	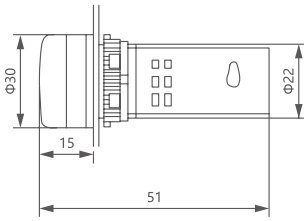
	Indicator Thermo-Meter	AD16-22DT	White Green Red Yellow Blue	-20°C~+199°C	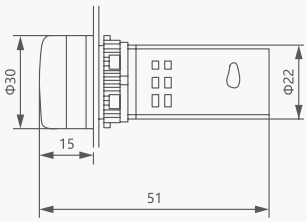

AD16 Digital Display Indicator

	Elucidation	Model	Color	Date range	Size
	Indicator Voltmeter &Ammeter	AD16-22VA	White Green Red Yellow Blue	AC50~500V 0-100A	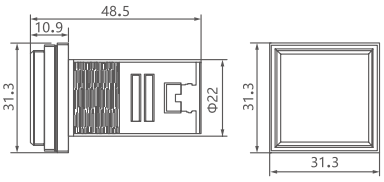
	Indicator Voltmeter Frequencyy Meter	AD16-22VHz	White Green Red Yellow Blue	AC50-500V 0-99AHz	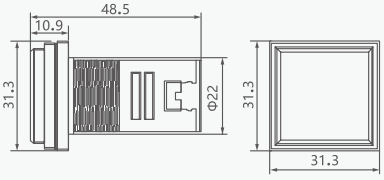
	Indicator Counter	AD16-22CC	White Green Red Yellow Blue	0~999999	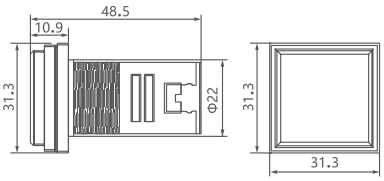
	Indicator Hours	AD16-22HR	White Green Red Yellow Blue	0-999H	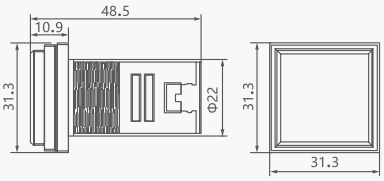

E

AD16 Digital Display Indicator

	Elucidation	Model	Color	Date range	Size
	Indicator Voltmeter &Ammeter Frequencyy Meter	AD16-22VAHzS	White Green Red Yellow Blue	AC50-500V 0-100A 0-99Hz	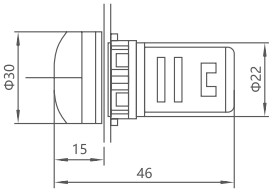
	Indicator Voltmeter &Ammeter	AD16-22VAS	White Green Red Yellow Blue	AC50-500V 0-100A	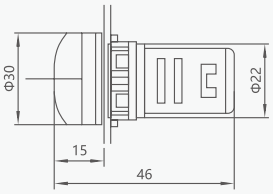
	Indicator Power Meter	AD16-22kW	White Green Red Yellow Blue	AC220V/26kW AC380V/45kW	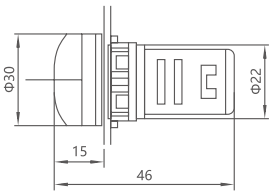
	Indicator Power Meter	AD16-22kW+W	White Green Red Yellow Blue	AC220V 50W-4.5kW	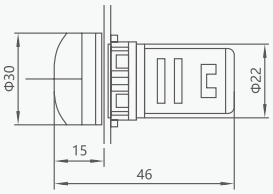

E

AD16 Digital Display Indicator

	Elucidation	Model	Color	Date range	Size
	Indicator Voltmeter &Ammeter Frequencyy Meter	AD16-22VAHzS	White Green Red Yellow Blue	AC50-500V 0-100A 0-99Hz	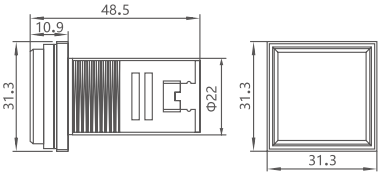
	Indicator Voltmeter &Ammeter	AD16-22VAS	White Green Red Yellow Blue	AC50-500V 0-100A	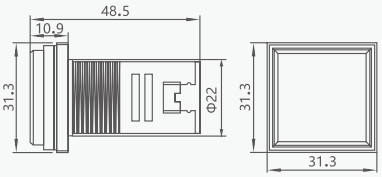
	Indicator Power Meter	AD16-22kW	White Green Red Yellow Blue	AC220V/26kW AC380V/45kW	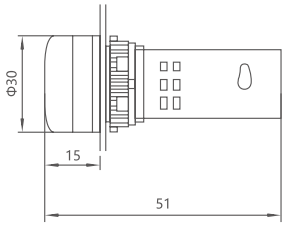
	Indicator Power Meter	AD16-22kW+W	White Green Red Yellow Blue	AC220V 50W-4.5kW	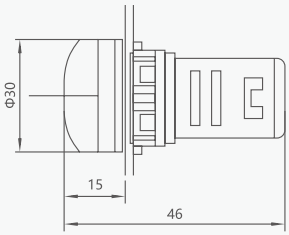

E

Button Attachment

	Product Name and Use	Scope of Application
	F-66: Rectangular Φ 16 mm button (Commonly used for squares and rectangles) F-67: Square Φ 16 mm button (Circular button)	Φ16 mm protective cover is designed to prevent misoperation and is suitable for the AD16 series
	F-01 Installed on a Ø22 mm self-reset button to prevent accidental operation	LAY5-BA flat push button LA38-11 flat push button with light Suitable for Ø22mm round buttons
	F-03 Installed on the front of the Ø22mm mushroom-head and emergency stop push buttons to prevent accidental operation	Suitable for various Ø22mm mushroom-head and emergency stop push buttons
	F-82-F Installed on the front of Ø22 mm mushroom-head and emergency stop push buttons to prevent accidental operation	Suitable for various Ø22mm mushroom-head and emergency stop push buttons
	F-05 Used on flat push buttons to prevent accidental operation	LAY5-BA flat push button LA38-11/11D flat push button/with light
	F-07:Ø40 Warning Ring F-14: Medium Ø60 Warning Ring F-15:Ø90 Warning Ring	Used for emergency stop push buttons for indication. Suitable for products with Ø22mm mounting holes
	F27 Lamp holder transformer module For D8 lamp holder	Applicable to LA38-11D series
	F-08: Applicable to AD16 F-50: Suitable for LAY5-BA self-resetting flat push button F-51: Applicable to LAY5-BW3 illuminated buttons	Installed on the button head Waterproof and dustproof Protection level: IP65
	F129S Mount the push button switch onto the bracket, then snap the bracket onto a 35 mm DIN rail	Suitable for XB2, XB5, XB7, LA38 and other series
	F129T Mount the push button switch onto the bracket, then snap the bracket onto a 35 mm DIN rail	Suitable for XB2, XB5, XB7, LA38 and other series

Button Attachment

	Product Name and Use	Scope of Application
	F-09: Black Ø22 F-52: Gray Ø22	Used to cover unused openings in the panel (panel plug)
	BA9S Universal LED lamp beads	All snap-on lamp holders are replaceable Replace the LED chip
	F-10, F-45, F-11, F-44: Legend plates for mounting on push buttons or indicator lights for symbol or text identification	F-10: Flush-mounted, 25 × 11 F-45: Flush-mounted, 25 × 18 F-11: Insert type, 25 × 18 F-44: Insert type, 25 × 11
	F10K Label size: 25 × 11 Installation: Insert the label and snap the transparent cover back into place	Curved design, suitable for Ø22 mm push buttons or indicator lights. Custom symbols or laser engraving available
	F10X Label size: 25 × 11 Installation: Supports laser engraving or customized engraving and replacement	
	F12 Fits around the push button neck, allowing Ø22 mm push button switches to be installed in Ø25 mm or Ø30 mm mounting holes	Suitable for all Ø22mm series
	F13 Allows Ø22 mm products to be installed in Ø30 mm mounting holes	Suitable for the LA38 Series
	F33 (Transparent) Installed over the contact block of B2 series products for dust protection	Suitable for protecting 1–2 contact blocks of the LAY5-BE101/BE102 series
	F-59 Color: Yellow	Protective cover for Ø40 mm emergency stop push buttons
	F-60 Color: Yellow	Protective cover for Ø60 mm emergency stop push buttons

Button Attachment

	Product Name and Use	Scope of Application
	F-61 Color: Yellow	Semi-circular protective cover for Ø60 mm emergency stop push buttons
	F-69 Color: Yellow	Semi-circular protective cover for Ø90 mm emergency stop push buttons
	F-04	Suitable for Ø22mm flat push buttons and illuminated buttons
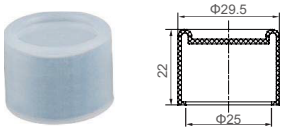	LAY5-PE22A	Product Adaptation: LAY5-BA
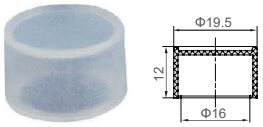	LAY5-PE22W	Product Adaptation: LAY5-BW3
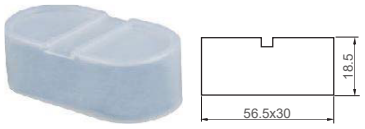	LAY5-PE22B	Product Adaptation: APBB
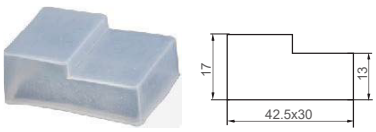	LAY5-PE22FH	Product Adaptation: LAY5-BL8465
	LAY5-PE22CF	Product Adaptation: LAY5-BL8325

E

LAY5 Button Box

Button switch box

	Type	Configuration	Mark
			
	LAY5-B101H29	Green flat button, 1NO	Sign mark: **START**
	LAY5-B102	Green flat button, 1NO	Switch mark: I
	LAY5-B103	Green flat button, 1NO	Switch mark: **START**
	LAY5-B111H29	Red flat button, 1NC	Sign mark: **STOP**
	LAY5-B112	Red flat button, 1NC	Switch mark: ○
	LAY5-J174	Red Φ40 mushroom auto-locking, turn	
	LAY5-B211H29	Green flat button, 1NO; Red flat button, 1NO	Sign mark: **START,STOP**
	LAY5-B213	Green flat button, 1NO; Red flat button, 1NO	Switch mark: I ○
	LAY5-B215	Green flat button, 1NO; Red flat button, 1NO	Switch mark: **START,STOP**
	LAY5-B222	White flat button, 1NO; Black flat button, 1NO	Sign mark: ↑ ↓
	LAY5-B341H29	Green flat button, 1NO; Red flat button, 1NC; Green flat button, 1NO	Switch mark: **FORWRD, STOR, REVERSE**
	LAY5-B339	Green flat button, 1NO; Red flat button, 1NC; Green flat button, 1NO	Switch mark: **OPEN, STOP, CLOSE**
	LAY5-B324	Green flat button, 1NO; Red flat button, 1NC; Black flat button, 1NO	Switch mark: I ○ II
	LAY5-B334	White flat button, 1NO; Red flat button, 1NC; Black flat button, 1NO	Switch mark: ↑ ○ ↓
	LAY5-B311H29	White flat button, 1NO; Red flat button, 1NC; Black flat button, 1NO	Switch mark: → ○ ←

LAY5 Button Box

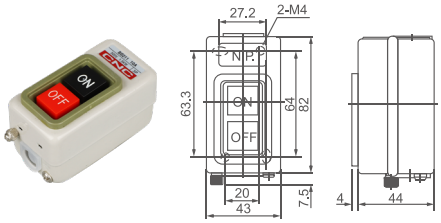

BS216

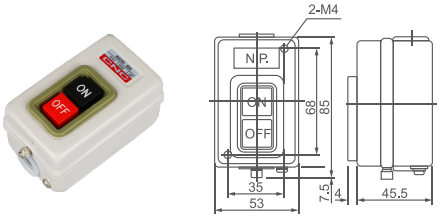

BS230

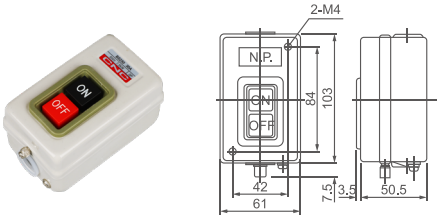

BS211

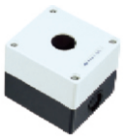

Button box for single hole
IP40
φ22, φ25

LAY5-BOX1



Button box for two oles
IP40
φ22, φ25

LAY5-BOX2



Button box for three holes
IP40
φ22, φ25

LAY5-BOX3



Button box for four holes
IP40
φ22, φ25

LAY5-BOX4



Button box for five holes
IP40
φ22, φ25

LAY5-BOX5



Button box for six holes
IP40
φ22, φ25

LAY5-BOX6

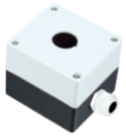

Button box for single hole
IP40/54
φ22, φ25

LAY5-BP01



Button box for two holes
IP40/54
φ22, φ25

LAY5-BP02



Button box for three holes
IP40/54
φ22, φ25

LAY5-BP03



Button box for five holes
IP40/54
φ22, φ25

LAY5-BP05



Button box for six holes
IP40/54
φ22, φ25

LAY5-BP06



Button box for four holes
IP40/54
φ22, φ25

LAY5-BP04

XCK-M Limit Switch

Technical data

Item	XCK-M mode, metal three line incoming mouths					
2-pole contact terminal Quick	Metal head direct-acting type	Meta steel-roller direct-acting type	Metal ther-moplastic roller tumbler di-rect-acting type, Single direction with horizontal movement	Adjustable length and ther-moplastic roller tumbler type	Metal thermoplastic roller tumbler direct-acting type	Multidirection
Machine life (million times)	15	15	15	15	15	10
Motion speed (m/s)	0.5	1	1	1.5	1	1.5
Protection degree	IP65					
Rated work characters	ALTIPAK AC 15; A 300(Ue=240V, Ie=3A) ALTIVAR DC13; Q 300(Ue=250V, Ie=0.27A)					
Boundary dimensions: Width×depth×height	60×30×64					
Complete switch (2 poles 1-close+1-open, quick)	XCK-M110	XCK-M102	XCK-M121	XCK-M141 XCK-M139	XCK-M115	XCK-M106 XCK-M108

E

Overall and mounting dimensions(mm)

XCK-M110

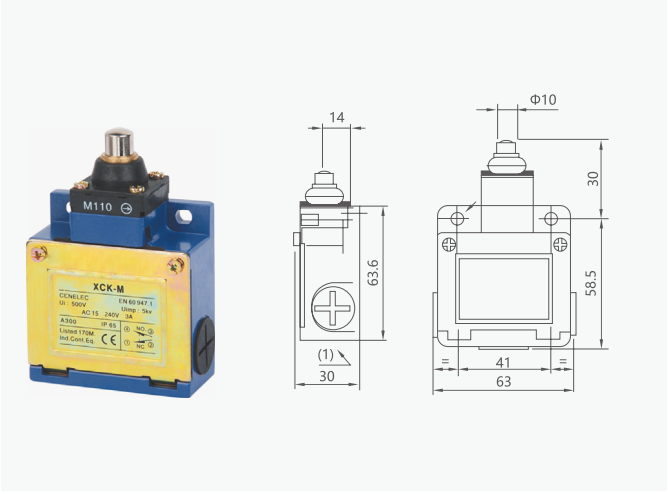

XCK-M102

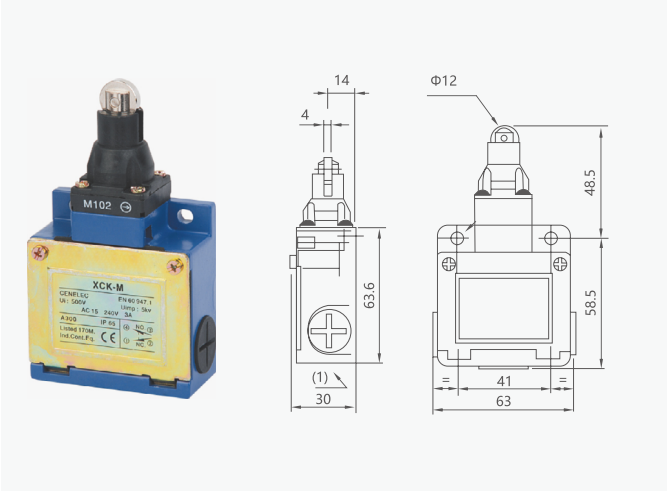

XCK-M Limit Switch

XCK-M115

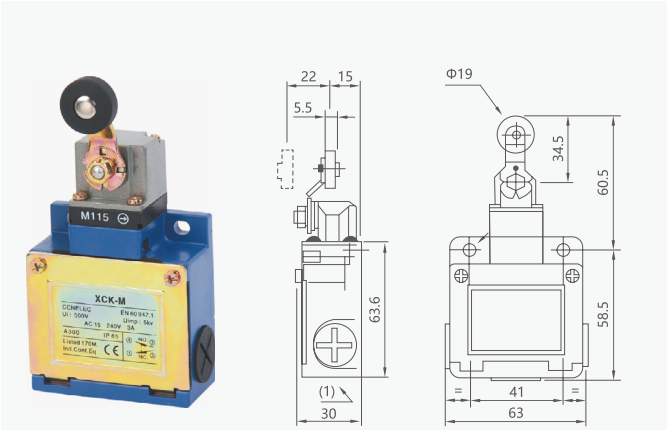

XCK-M121

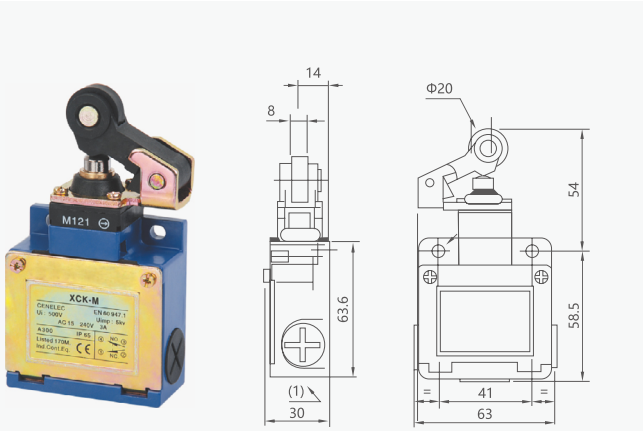

E

XCK-M139

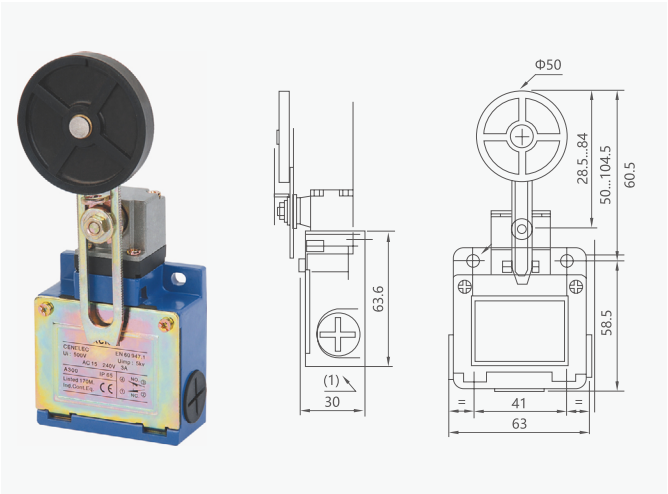

XCK-M141

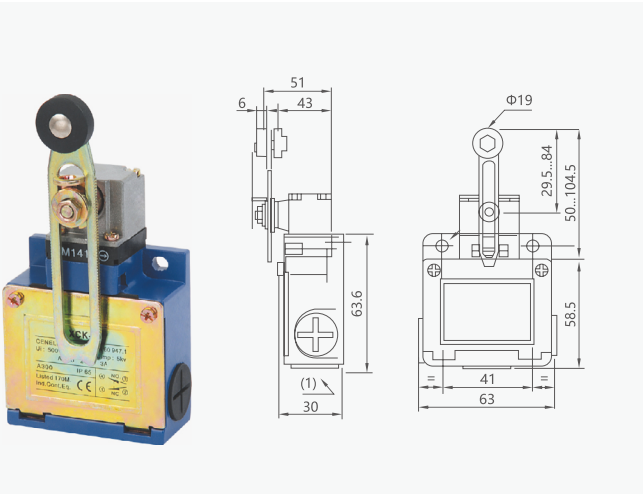

XCK-M106

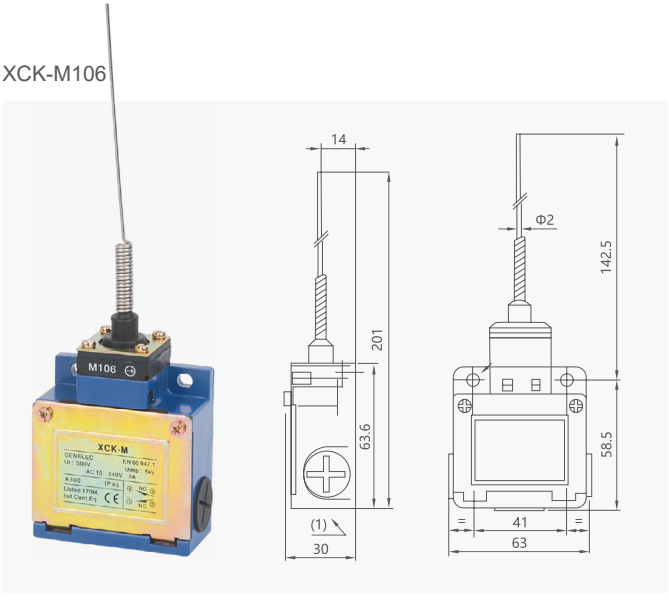

XCK-M108

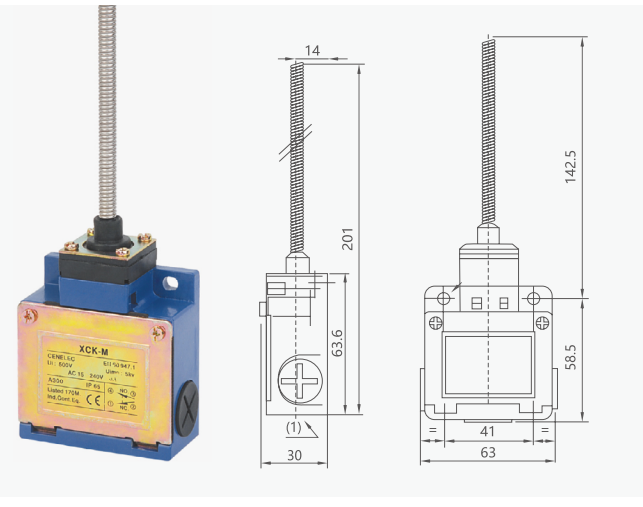

XCK-J Limit Switch

Technical data

Item	XCK-J mode double insulation, according to standard EN50041						
2-pole contact terminal Quick	Metal head direct-acting type	Meta steel-roller direct-acting type	Metal thermoplastic roller tumbler direct-acting type	Adjustable length and thermoplastic roller tumbler type	Metal thermoplastic cylindrical tum-bler type Diameter=6mm Length=200mm	Thermoplastic roller tumbler direct-acting type, Single direction with horizontal movement	Multidirection type
Machine life (million times)	30	25	30	30	30	15	30
Motion speed (m/s)	0.5	1	1.5	1.5	1.5	1	1.5
Protection degree	IP65						
Rated work characters	ALTIPAK AC 15; A 300(Ue=240V, Ie=3A) ALTIVAR DC13; Q 300(Ue=250V, Ie=0.27A)						
Boundary dimensions: Width×depth×height	41×41×77						
Complete switch (2 poles 1-close+1-open, quick)	XCK-J161 XCK-J1161	XCK-J167	XCK-J10511 XCK-J10531	XCK-J10541 XCK-J139	XCK-J10559	XCK-J121	XCK-J108

E

Overall and mounting dimensions(mm)

XCK-J161

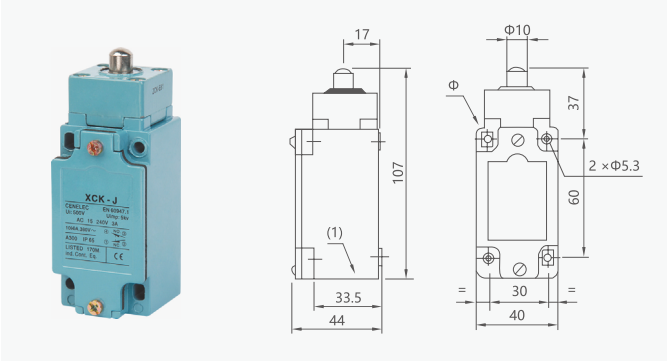

XCK-J1161

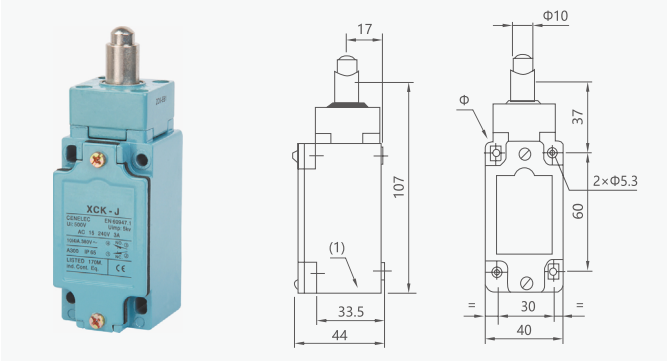

XCK-J167

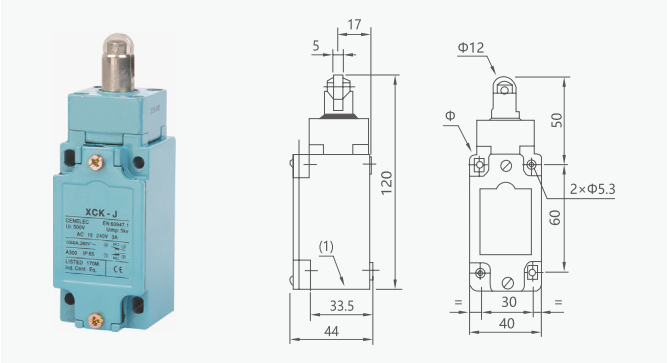

XCK-J10511

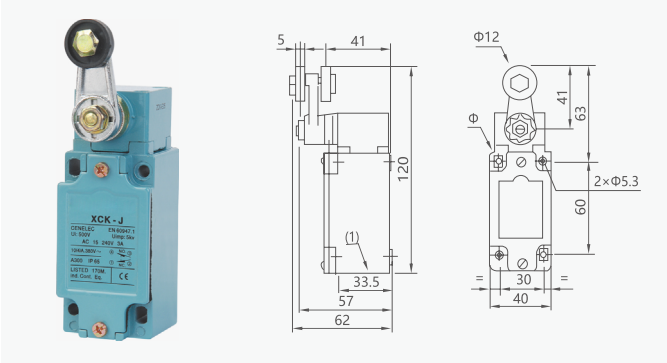

XCK-J Limit Switch

XCK-J10531

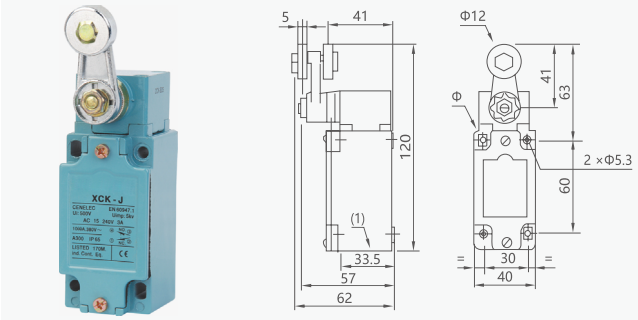

XCK-J10541

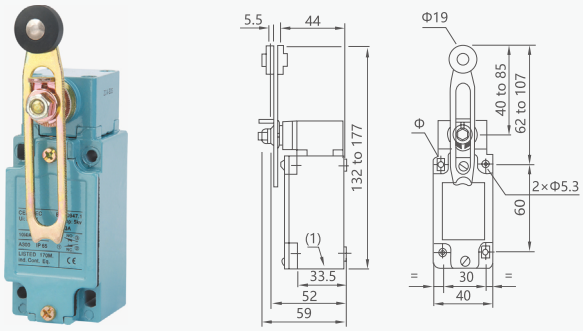

E

XCK-J121

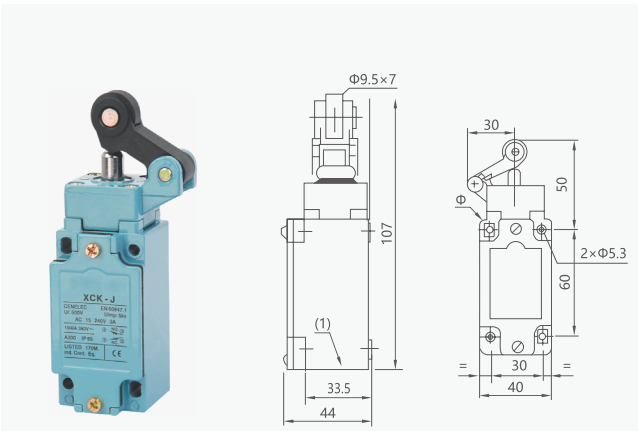

XCK-J139

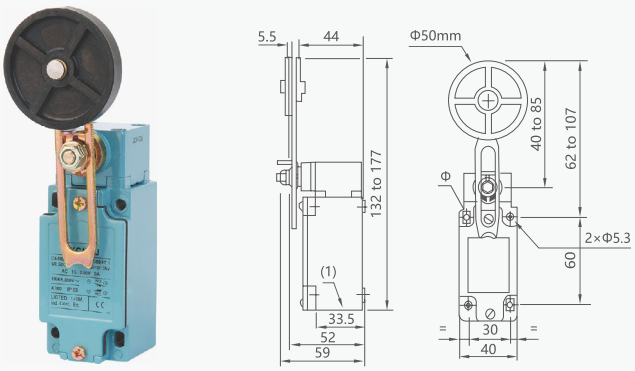

XCK-J10559

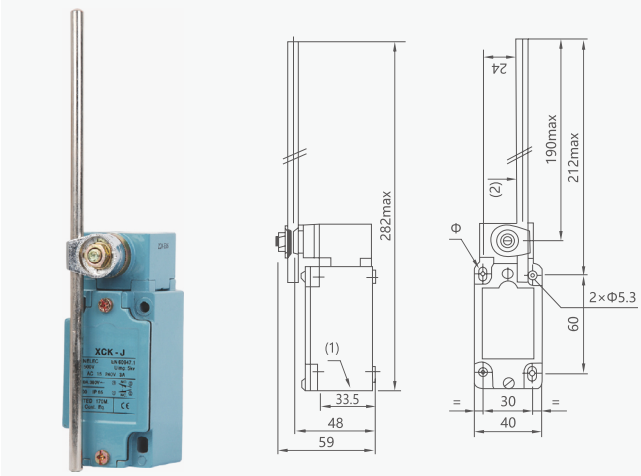

XCK-J108

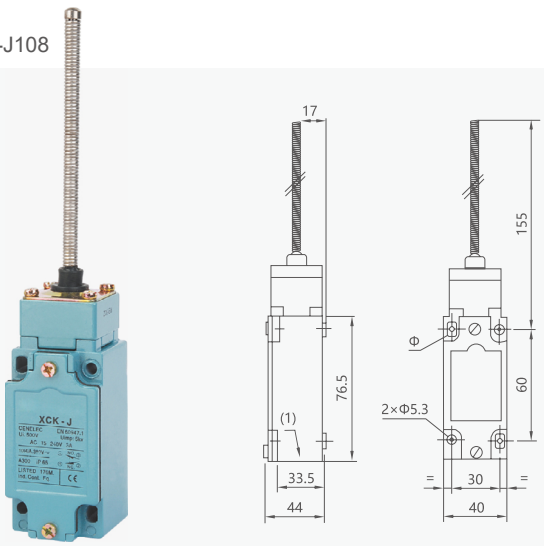

XCK-P Limit Switch

Technical data

Item	XCK-P mode double insulation, according to standard EN50047 one line incoming mouth						
2-pole contact terminal Quick	Metal head direct-acting type	Meta steel-roller direct-acting type	Metal thermoplastic roller tumbler direct-acting type, Single direction with horizontal movement	Thermoplastic roller tumbler direct-acting type	Adjustable length and thermoplastic roller tumbler type	Cylindrical tumbler type glass fabric cup Diameter=3mm Length=125mm	Multidirection type
Machine life (million times)	15	10	15	15	10	10	5
Motion speed (m/s)	0.5	0.3	1	1	1.5	1	1
Protection degree	IP65						
Rated work characters	ALTIPAK AC 15; A 300(Ue=240V, Ie=3A) ALTIVAR DC13; Q 300(Ue=250V, Ie=0.27A)						
Boundary dimensions: Width×depth×height	30×30×63						
Complete switch (2 poles 1-close+1-open, quick)	XCK-P110	XCK-P102	XCK-P118	XCK-P121 XCK-P128	XCK-P139 XCK-P145	XCK-P155	XCK-P106

E

Wiring diagram

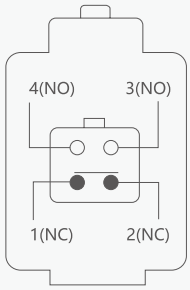

Overall and mounting dimensions(mm)

XCK-P110

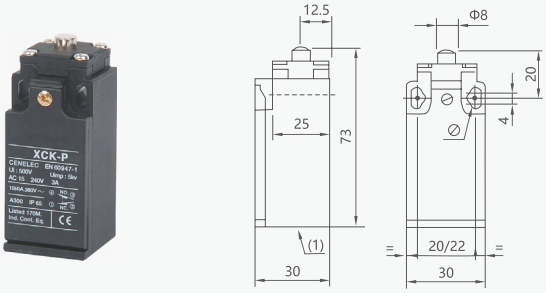

XCK-P102

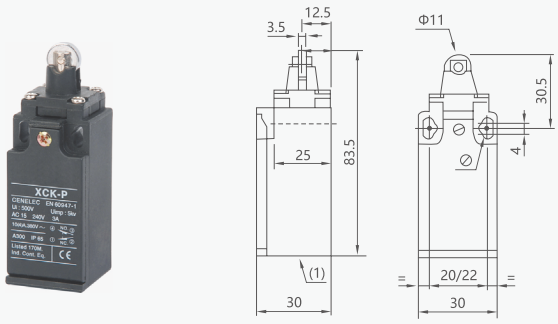

XCK-P121

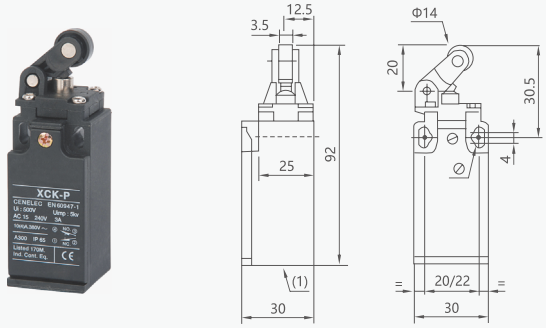

XCK-P Limit Switch

XCK-P127

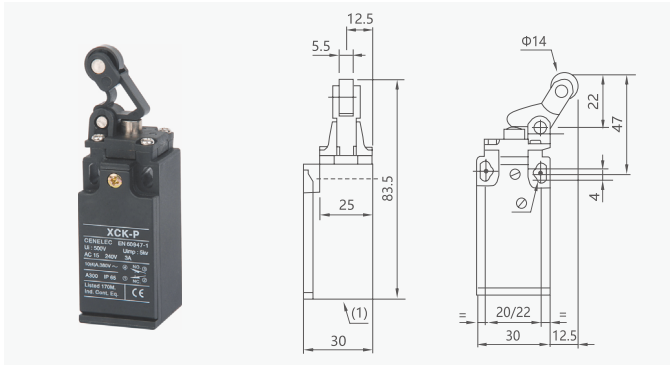

XCK-P128

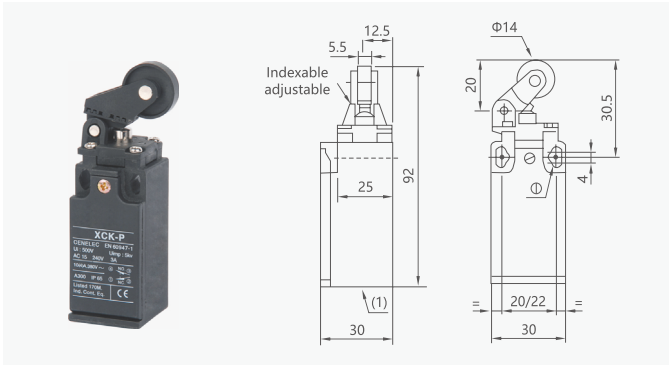

XCK-P118

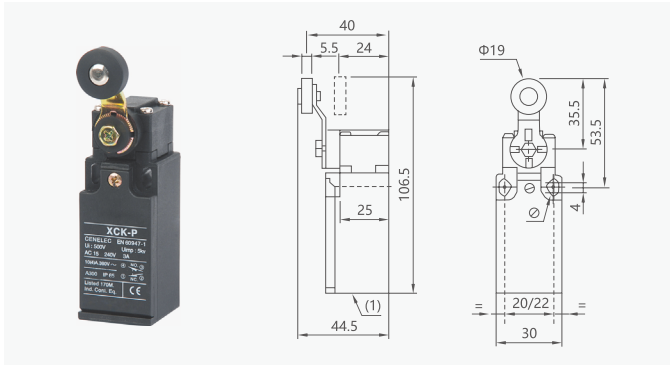

XCK-P155

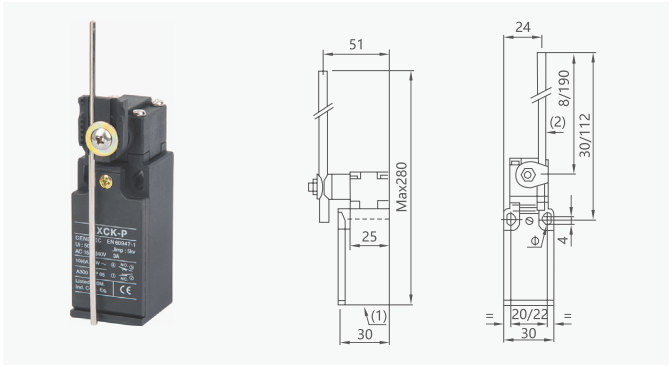

XCK-P145

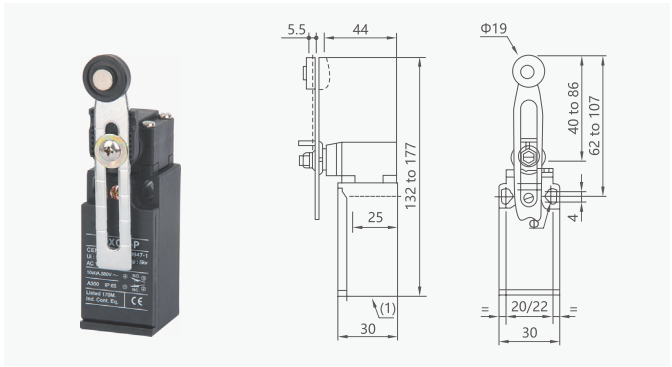

XCK-P139

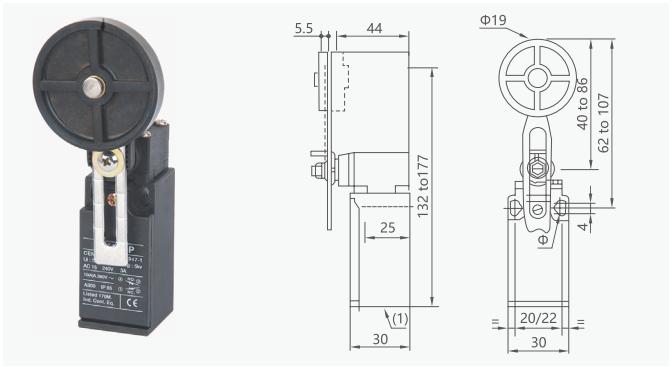

XCK-P106

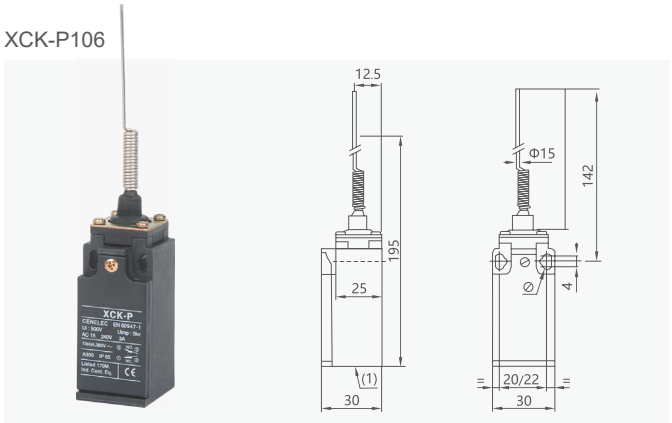

XCK-P181

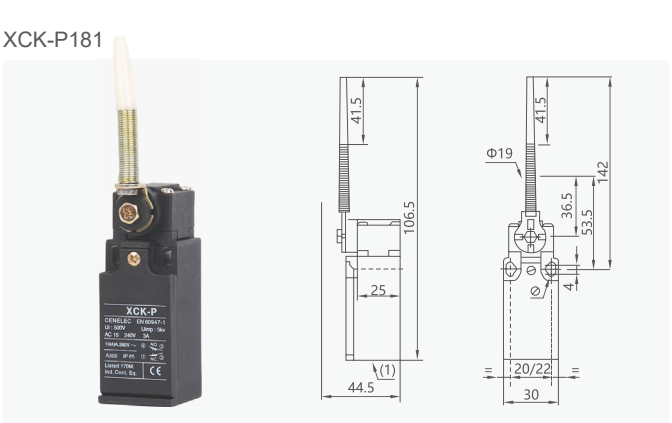

E

XCK-T Limit Switch

Technical data

Item	XCK-T mode double insulation, according to standard EN50047 one line incoming mouth						
2-pole contact terminal Quick	Metal head direct-acting type	Thermoplas-tic roller direct-acting type	Thermoplastic roller tumbler direct-acting type	Adjustable length and thermoplastic roller tumbler type	Cylindrical tumbler type glass fabric cup Diameter=3mm Length=125mm	Thermoplastic roller tumbler direct-acting type	Multidirection type
Machine life (million times)	15	10	15	15	15	10	10
Motion speed (m/s)	0.5	0.3	1	1.5	0.5	1.5	1.5
Protection degree	IP65						
Rated work characters	ALTIPAK AC 15; A 300(Ue=240V, Ie=3A) ALTIVAR DC13; Q 300(Ue=250V, Ie=0.27A)						
Boundary dimensions: Width×depth×height	58×30×50						
Complete switch (2 poles 1-close+1-open, quick)	XCK-T110	XCK-T102	XCK-T118	XCK-T139 XCK-T145	XCK-T155	XCK-T121 XCK-T128	XCK-T106

E

Overall and mounting dimensions(mm)

XCK-T110

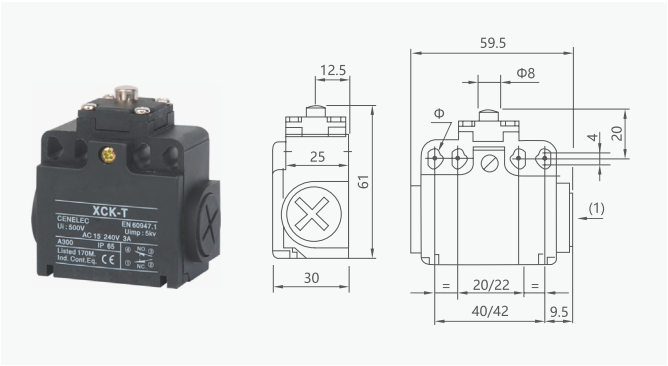

XCK-T102

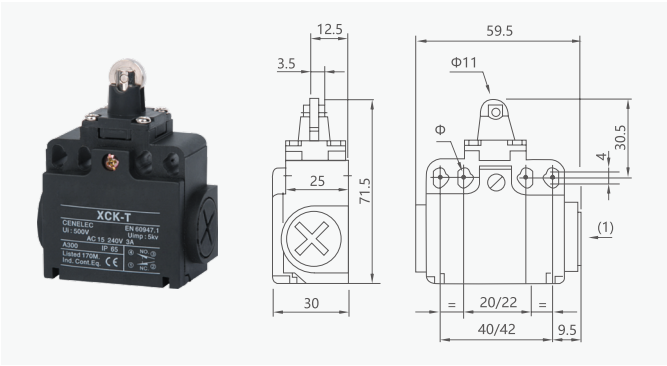

XCK-T118

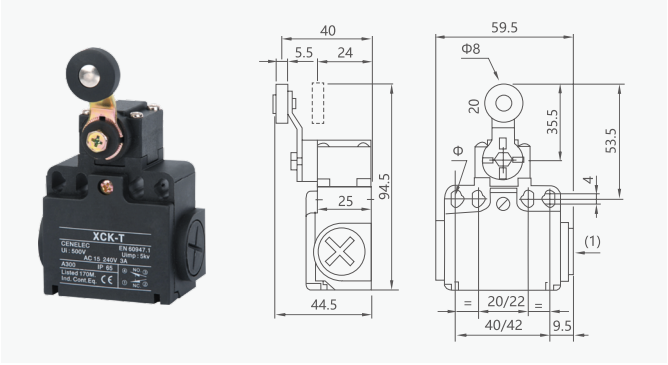

XCK-T145

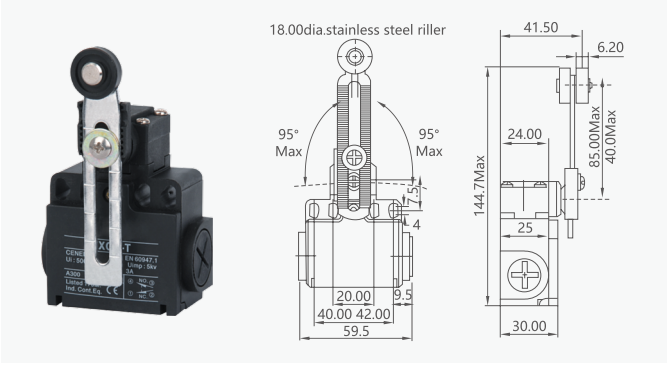

XCK-T Limit Switch

XCK-T127

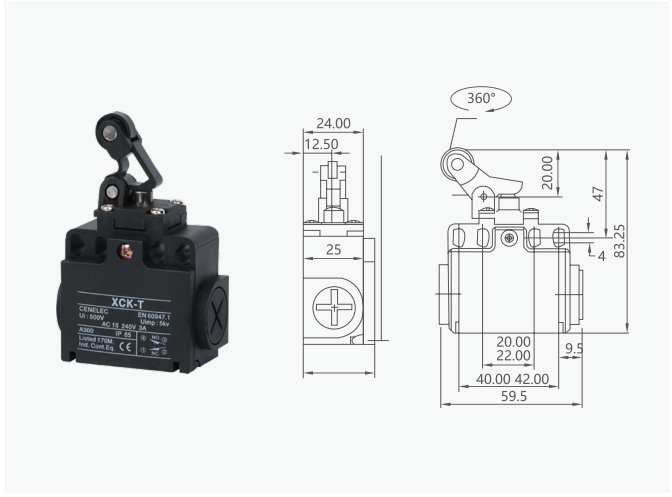

XCK-T121

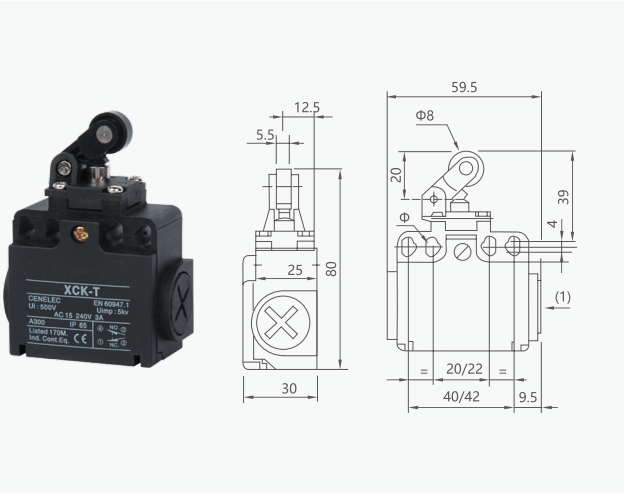

E

XCK-T155

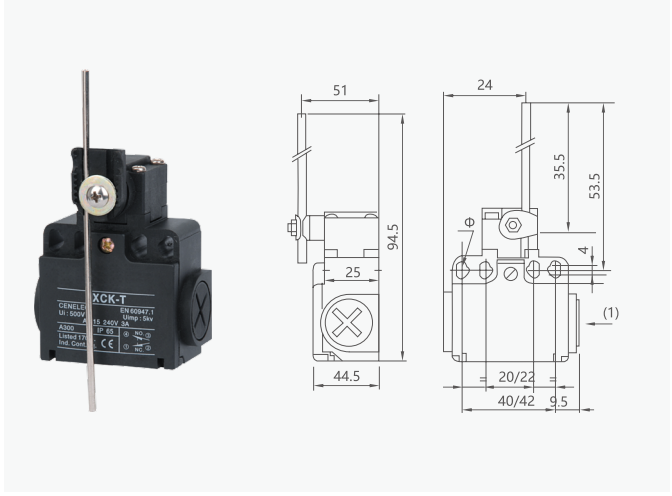

XCK-T128

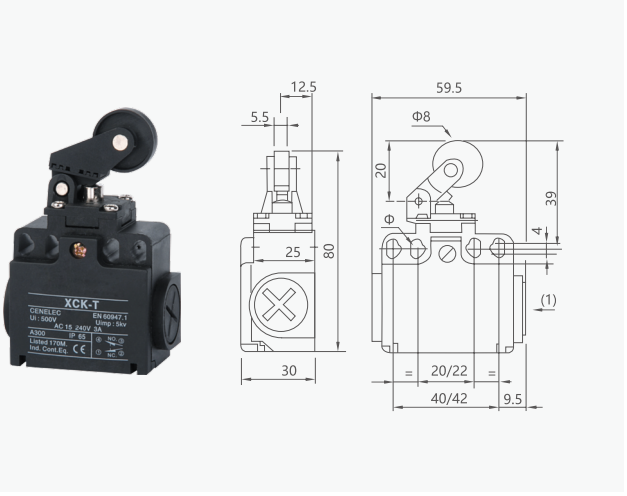

XCK-T139

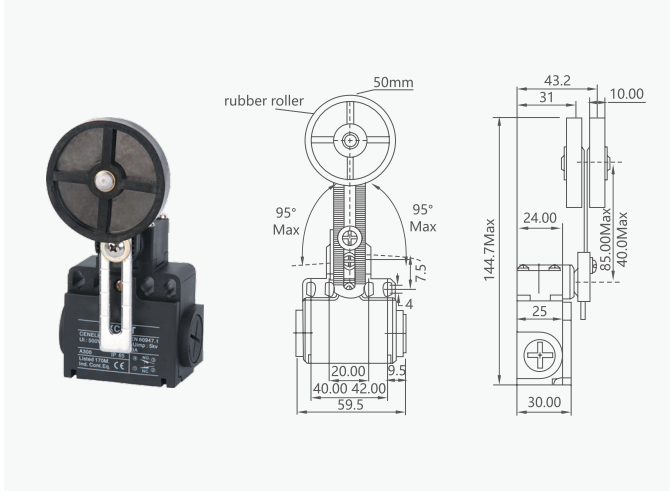

XCK-T106

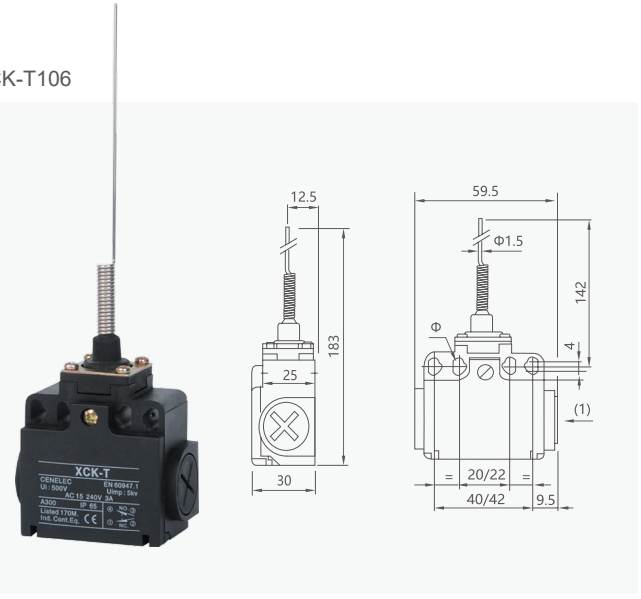

XCK-S Limit Switch

Technical data

Item	XCK-S mode double insulation, according to standard EN50041						
2-pole contact terminal Quick	Multidirec-tion type	Metal head direct-acting type	Steel-roller direct-acting type	Thermoplastic roller tumbler direct-acting type	Adjustable length and thermoplastic roller tumbler type	Adjustable length Ruber roller tumbler type Diame-ter=50mm	Thermoplastic roller tumbler direct-acting type, Single direction with horizontal movement
Machine life (million times)	5	15	15	15	15	15	15
Motion speed (m/s)	1	0.5	0.5	1.5	1.5	1	1
Protection degree	IP65						
Rated work characters	ALTIPAK AC 15; A 300(Ue=240V, Ie=3A) ALTIVAR DC13; Q 300(Ue=250V, Ie=0.27A)						
Boundary dimensions: Width×depth×height	40×36×72.5						
Complete switch (2 poles 1-close+1-open, quick)	XCK-S106 XCK-S108	XCK-S101	XCK-S102	XCK-S131	XCK-S141	XCK-S139	XCK-S121

E

Overall and mounting dimensions(mm)

XCK-S101

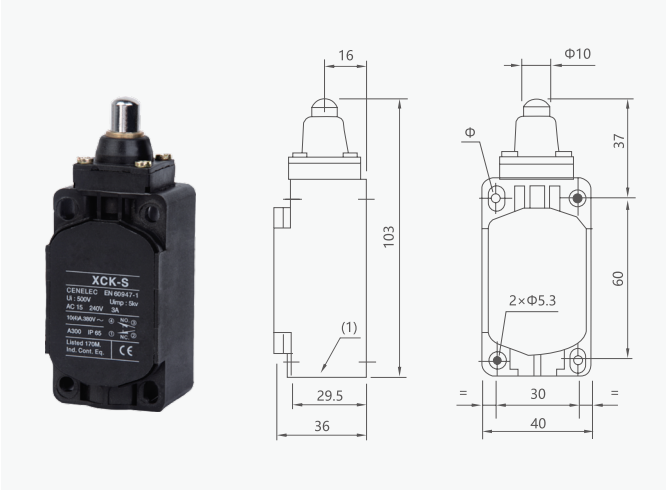

XCK-S102

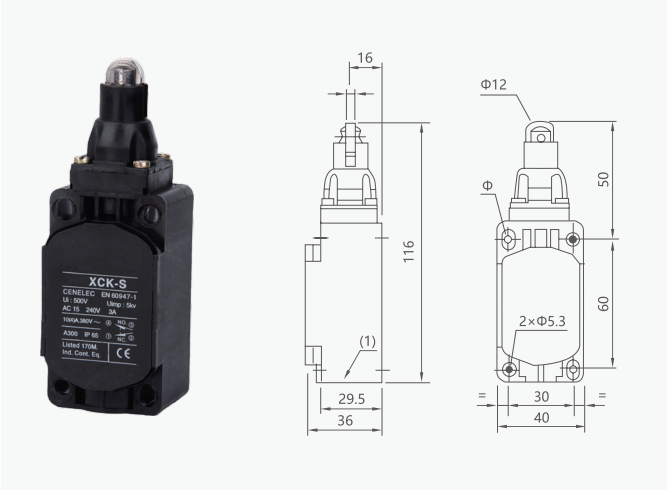

XCK-S Limit Switch

XCK-S121

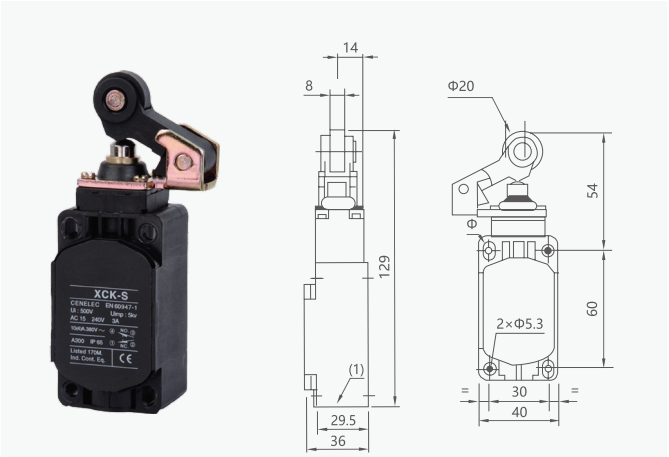

XCK-S131

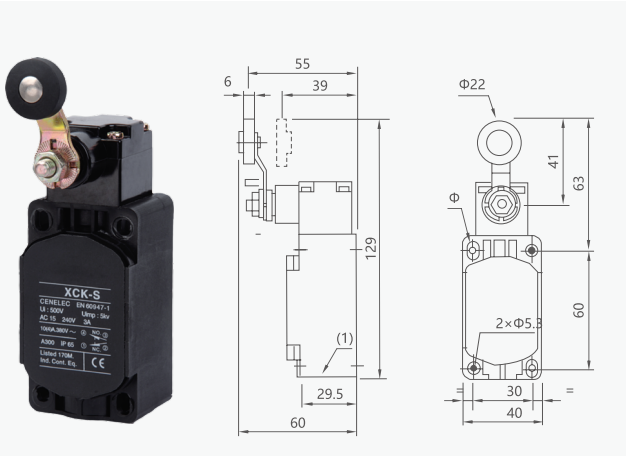

XCK-S139

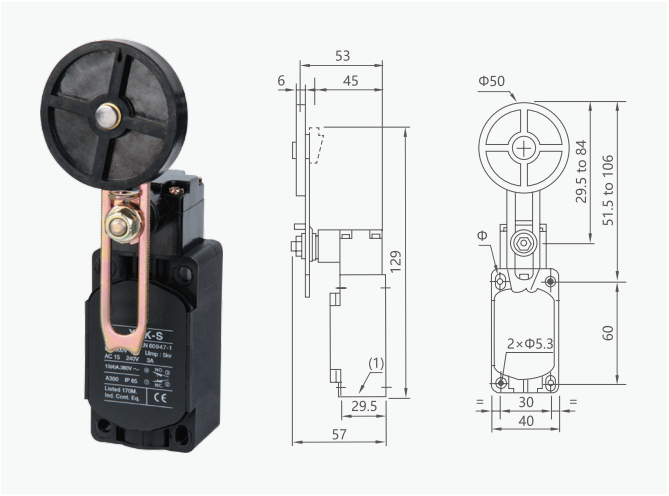

XCK-S141

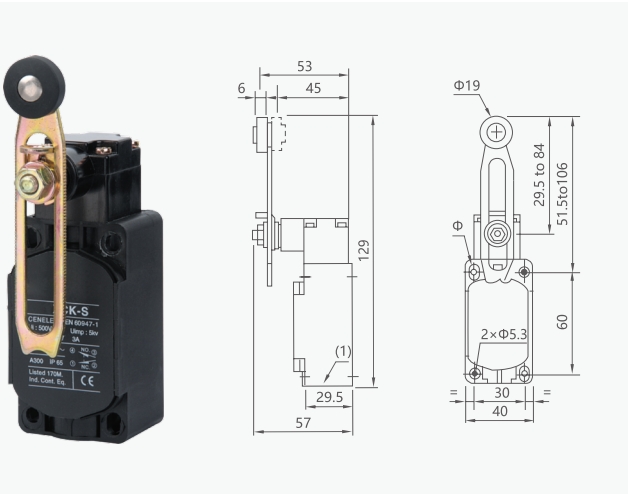

XCK-S106

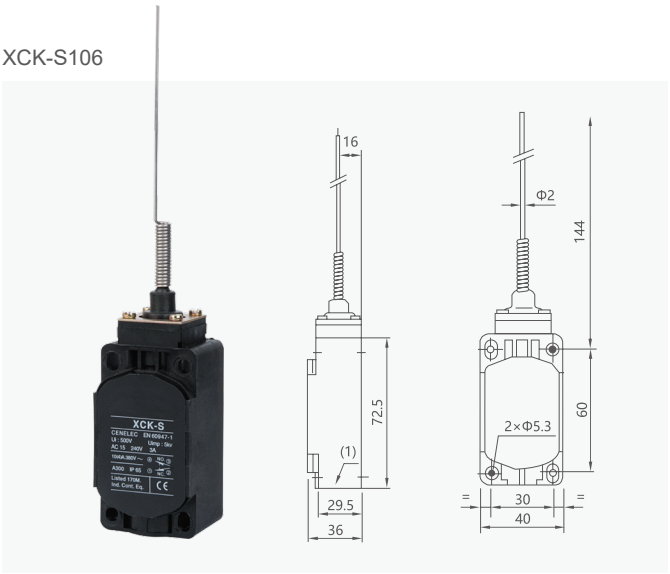

XCK-S108

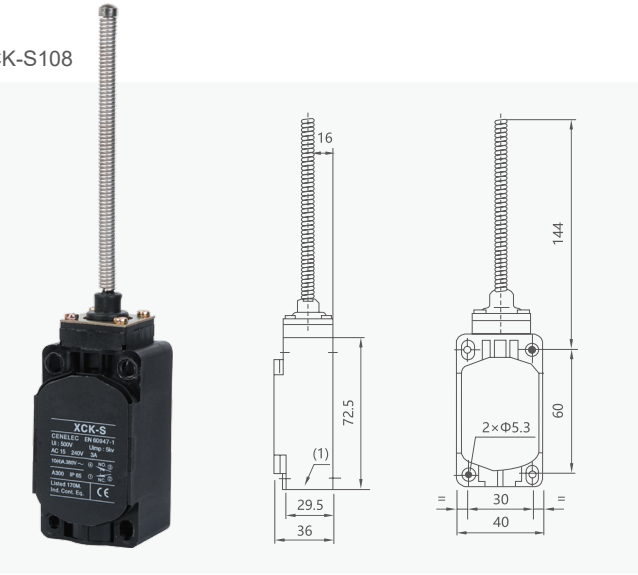

ME Limit Switch

Technical data

Item	Data	
Characteristics		
Contact arrangement	Form Z	
Initial contact resistance,max 15mΩ	By voltage drop 6 to 8V DC at rated current	
Contact material		
Initial insulation resistance at 500VDC	Min 100mΩ	
Initial breakdown voltage	1000Vrms for 1min between non-connective terminals 2000Vrms for 1min between dead metal parts and each terminal 2000Vrms for 1min between ground and each terminal	
Shock resistance max.	In the free position	10G
	In the operating position	Max. 55Hz
Vibration resistance	Standard type	30G
Life (min. operations)	Mechanical: 107 (at 120 cpm)	
	Eleatrical:	3×10^5 at rated resistive load AC 5A
		3×10^6 Magnetic contactor 200V AC load
Ambient temperature	-20 to +60°C, -4 to +140°C F	
Ambient humidity	< 95%	
Protective construction	IEC IP65	

Contact voltage / Load	Resisting load	Induced load
AC 125V	5A	3A
AC 250V	5A	2A
DC 115V	0.4A	0.1A

Wiring diagram

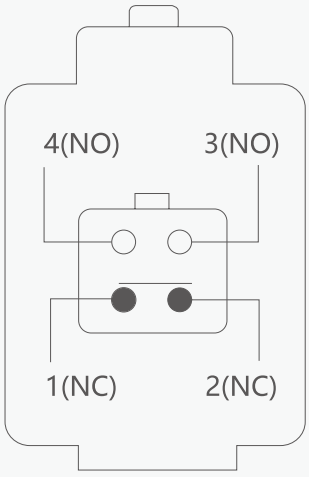

ME Limit Switch

Operating characteristics

Mode / Operation speciality	ME-8104	ME-8108 ME-8108-L	ME-8107
OF (max)	750g	750g	750g
RF (min)	100g	100g	100g
PT (max)	20°	20°	20°
OT (min)	50°	50°	50°
MD (max)	12°	12°	12°
OP			

Mode / Operation speciality	ME-8111	ME-8112 ME-8122	ME-8166 ME-9101
OF (max)	900g	900g	150g
RF (min)	150g	150g	-
PT (max)	1.5mm°	1.5mm°	30mm
OT (min)	4mm	4mm	-
MD (max)	1mm	1mm	-
OP	26±0.8mm	37±0.8mm	-

E

Overall and mounting dimensions(mm)

ME-8111

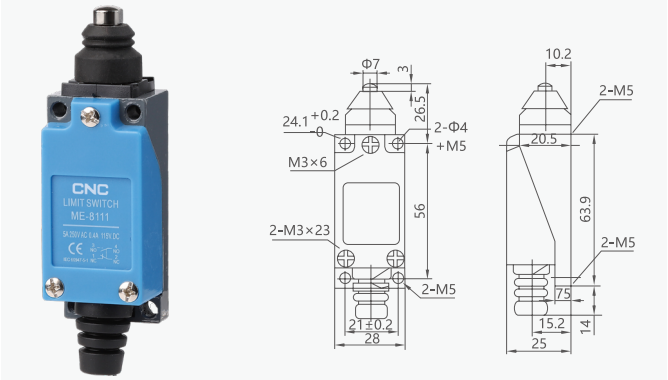

ME-8112

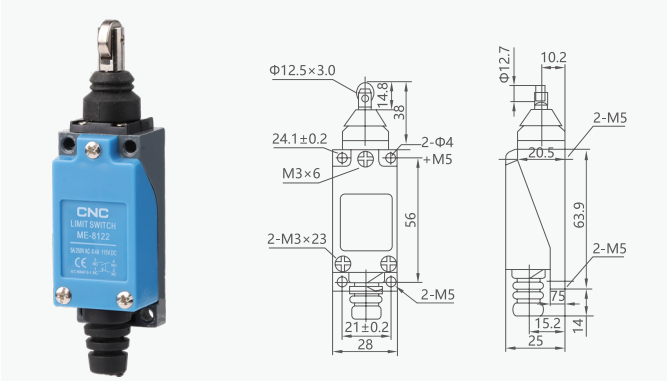

ME-8122

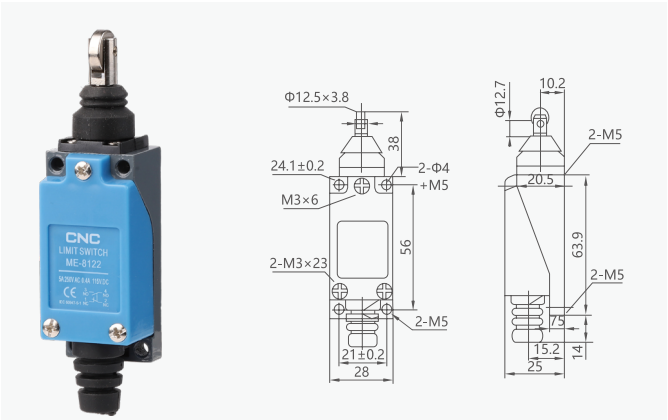

ME-8104

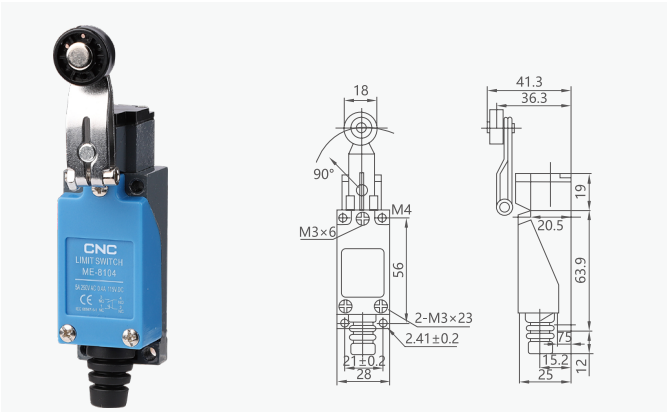

ME Limit Switch

ME-8108

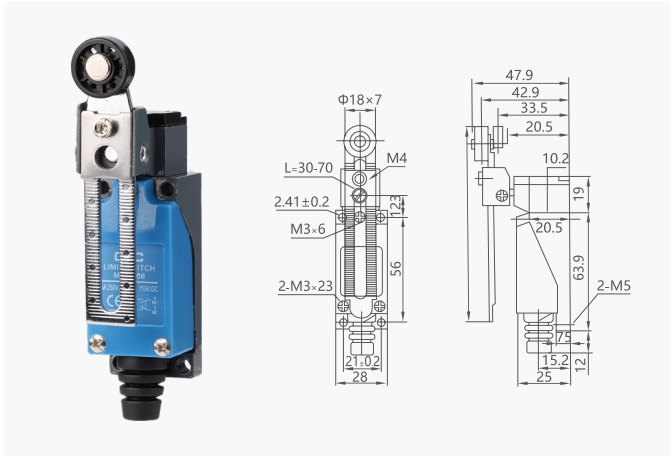

ME-8107

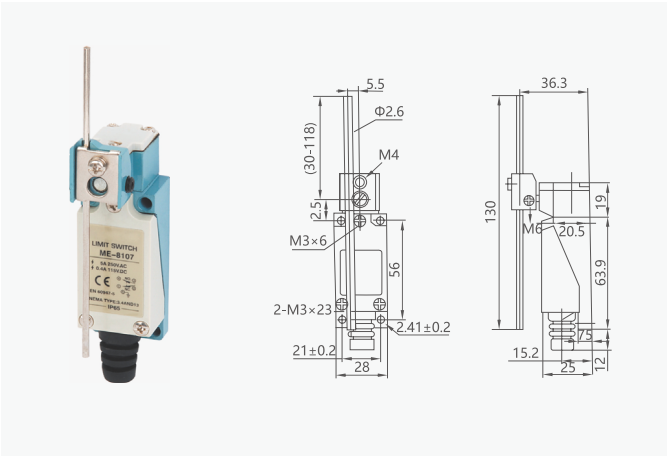

ME-8108-L

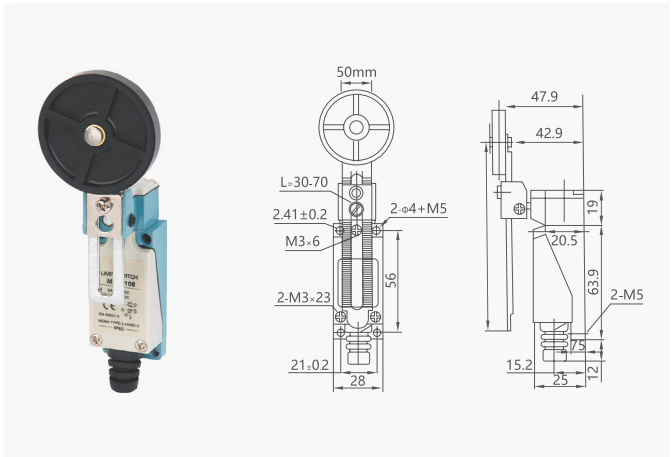

ME-8166

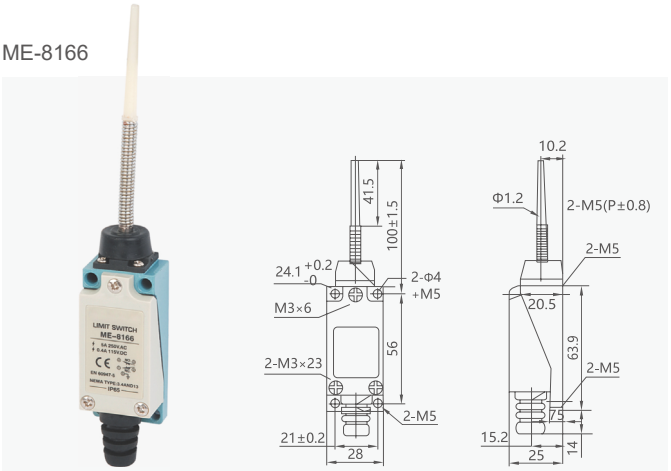

ME-8169

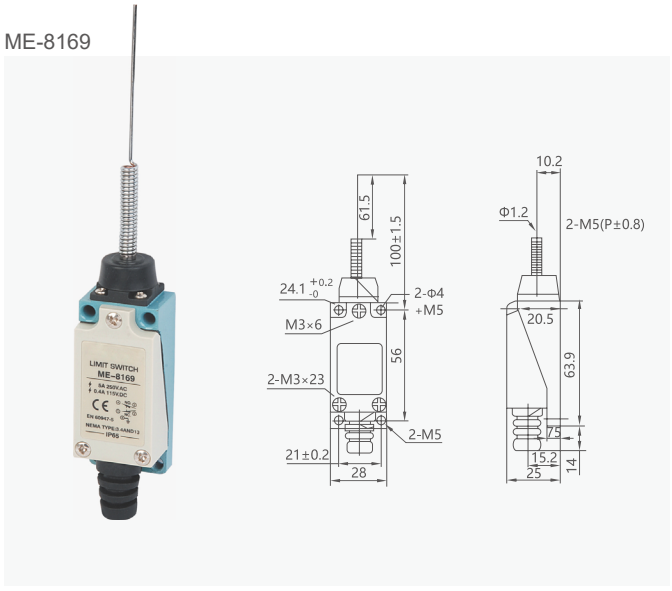

ME-9101

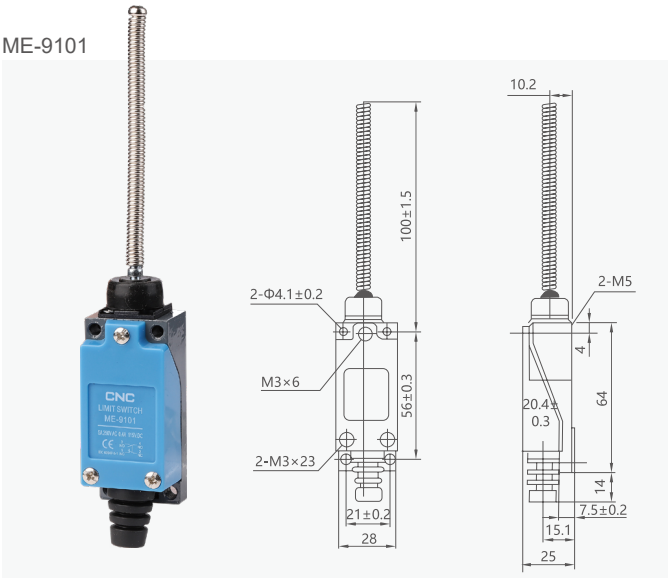

E

MEA Limit Switch

Technical data

Item		Data
Total plastic enclosure, light weight switch		
Wide choice of heads and actuators		
Captive cover screws		
Dustproof, oil-tight, water-resistant		
Double contacts		NO/NC contacts
Protection degree		IP65
Working range		6A 125 or 250VAC
Insulation resistance		100MΩ max at 500VDC
Max.operating freq.	Mechanical	120 times/m
	Mechanical	Above 10000000 times
Life test-electrical mechanical	Electrical	30 times/m
	Electrical	Above 500000 times
Ambient operating temperature		-25°C~+70°C

E

Wiring diagram

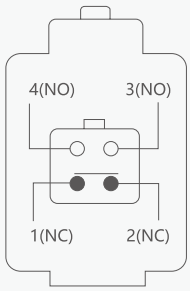

Overall and mounting dimensions(mm)

MEA-9111

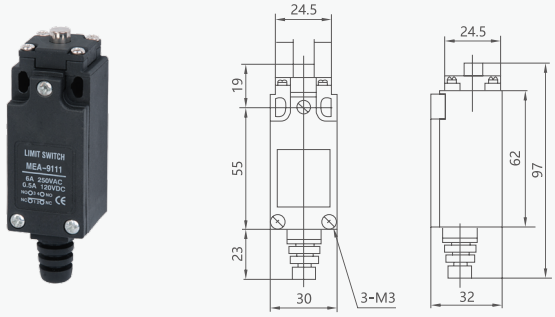

MEA-9112

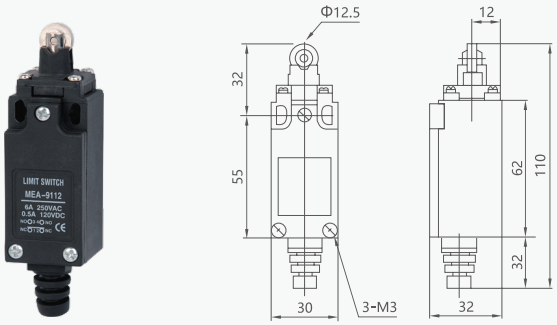

MEA-9122

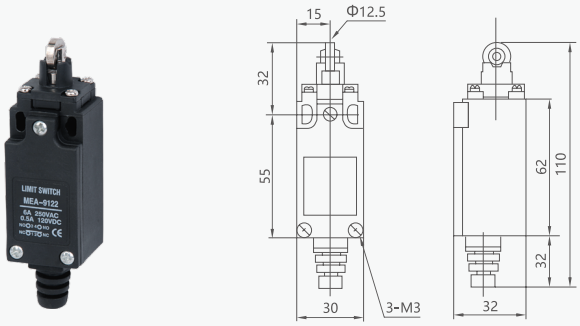

MEA Limit Switch

MEA-9107

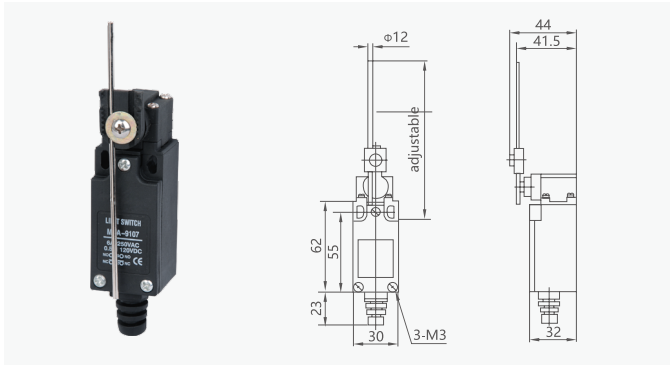

MEA-9124

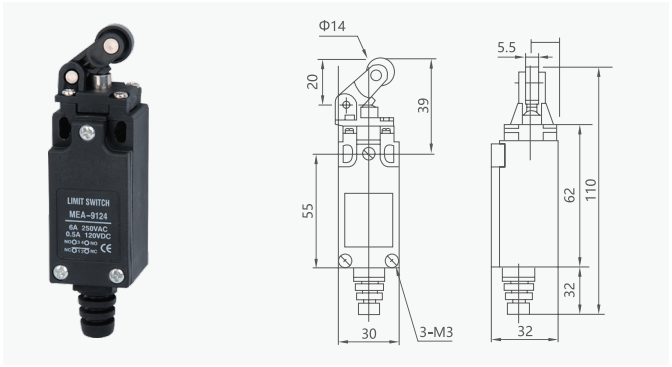

MEA-9108

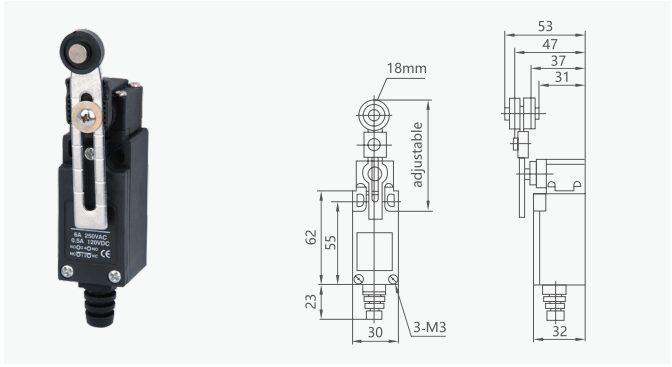

MEA-9104

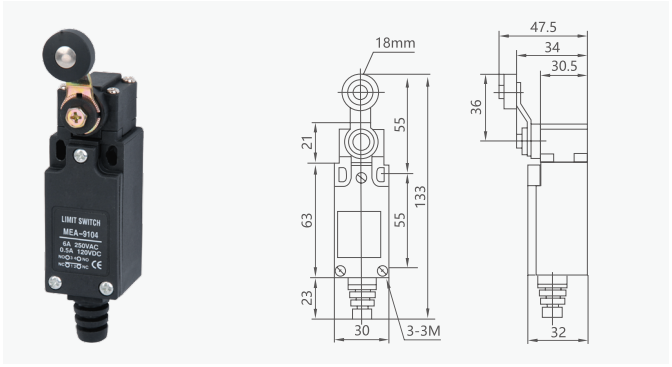

MEA-9108-L

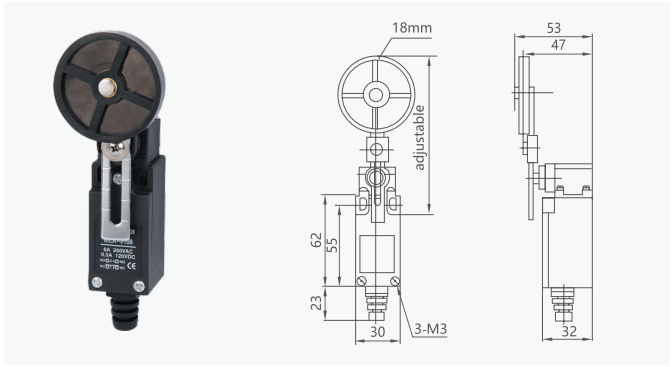

MEA-9169

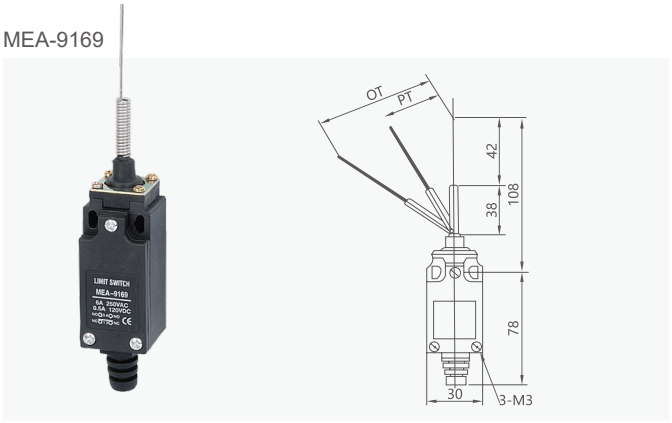

MEA-9161

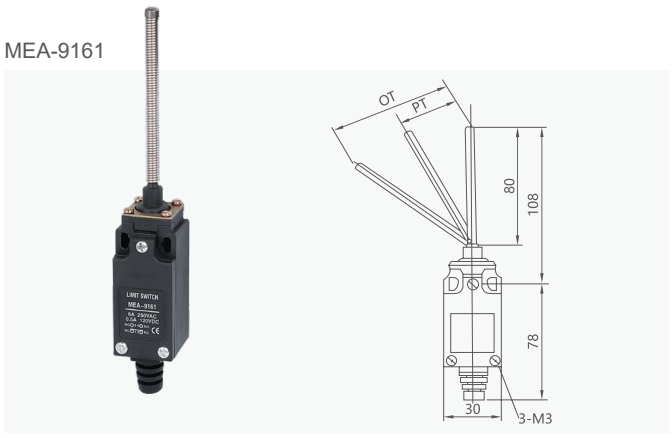

MEA-9166

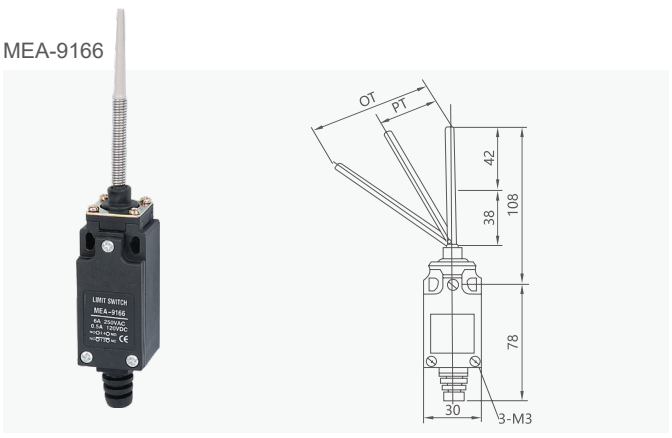

E

HL Limit Switch

Operating characteristics

Mode / Operation speciality	HL-5000	HL-5030	HL-5050	HL-5100	HL-5200	HL-5300
OF (max)	750g	750g	750g	900g	900g	150g
RF (min)	100g	100g	100g	150g	150g	-
PT (max)	20°	20°	20°	1.5mm°	1.5mm°	3mm
OT (min)	50°	50°	50°	4mm	4mm	-
MD (max)	12°	12°	12°	1mm	1mm	-
OP	-	-	-	30±0.8mm	30±0.8mm	-

Item		Data
Protection degree		IP67
Life	Mechanical	Ten million times above
	Electrical	500000 above
Operation speed		5mm~0.5m/s
Operation frequency	Mechanical	120 times/m
	Electrical	30 times/m
Insulation resistance		100MΩ DC500V
Contact resistance		Under 25mΩ (Initial value)
With stand voltage (50/60Hz 1min)	Between the terminals of same pole	AC 1000V
	Between charged metal parts	AC 1500V
	Between non-charged metal parts of each terminal	AC 1500V 10~55Hz (Amplitude 1.5mm)
Vibration	Misoperation	AC 250V 5A
Load		AC 380V 5A
		DC 125V 5A
		DC 250V 5A

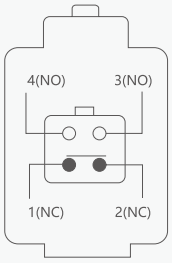

Overall and mounting dimensions(mm)

HL-5100



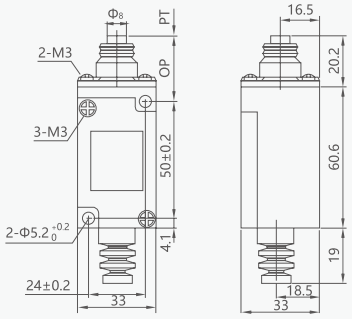

HL-5200



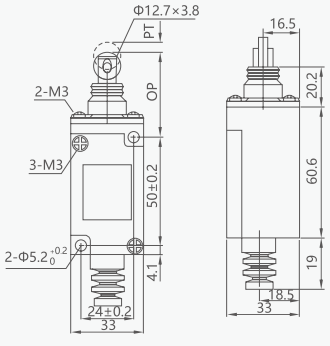

HL Limit Switch

HL-5050

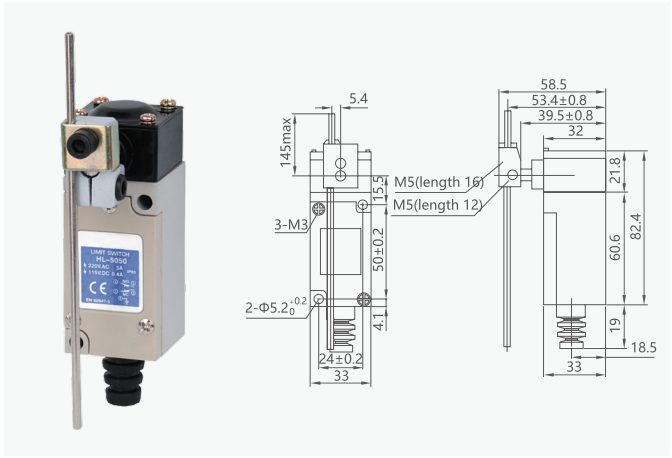

HL-5000

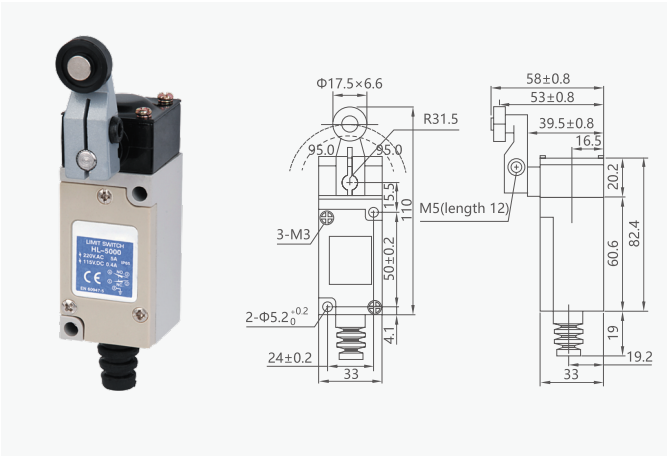

HL-5030-L

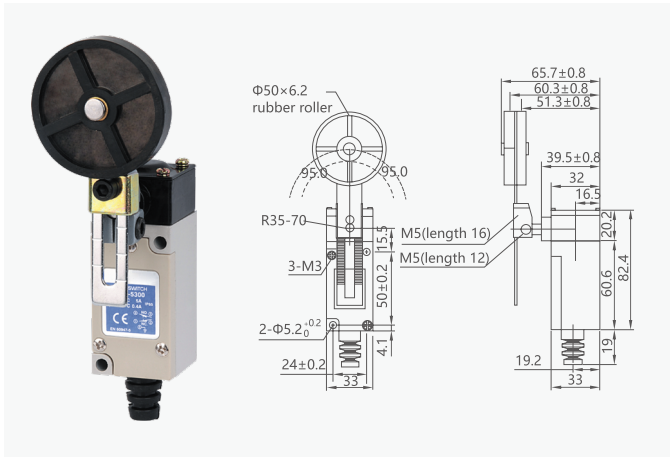

HL-5030

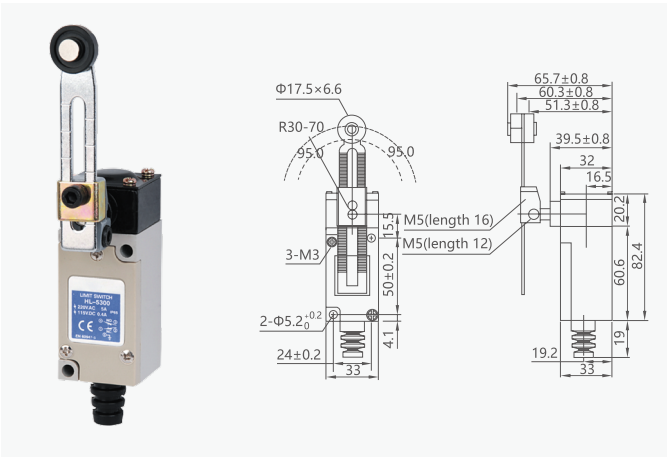

HL-5300

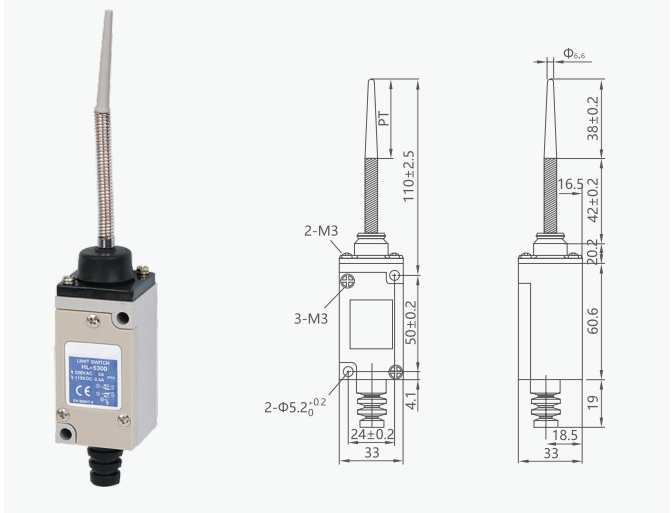

HL-5301

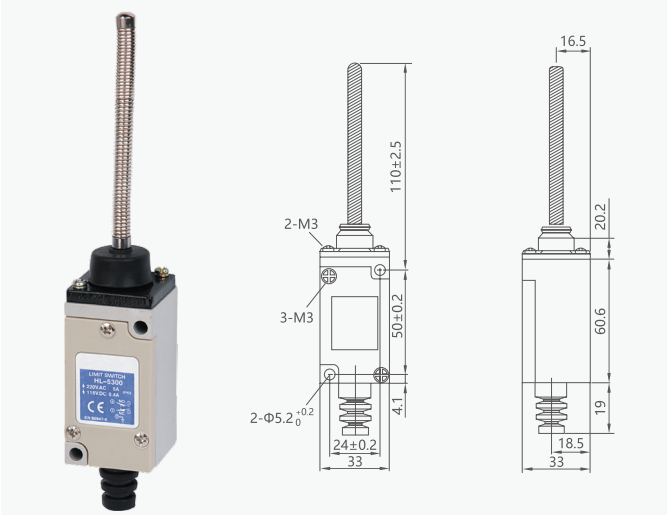

E

WL Limit Switch

Technical data

Item		Data
Protection degree		IP67
Life	Mechanical	Ten million times
	Electrical	Five hundred thousand times
Operation speed		1mm-1m/s
Operation frequency	Mechanical	120 times/m
	Electrical	100MΩ (DC 500V)
Insulation resistance		Under 15MΩ (Initial value)
Contact resistance		20 times/m
With stand voltage (50/60Hz 1min)	Between the terminals of same pole	AC 1000V (600V)
	Between charged metal parts	AC 2200V (1500V)
	Between non-charged metal parts of each terminal	AC 2200V (1500V)
Vibration	Misoperation	10-55Hz amplitude 1.5mm
Load		AC 250V 10A; AC 380V 10A DC 125V 5A; DC 250V 5A
Ambient operating temperature		-10~+80°C
Humidity		< 95%

General

1. Double-circuit limit switch is widely used
2. Firm aluminum alloy enclosure
3. High mechanical strength
4. Oil-proof, waterproof and pressure-proof structure
5. Indicating plate with setting position is installed in it, so it is easy to maintain
6. A variety of actuators, easy to use
7. Built-in contact stand has double-reed, so it has long mechanical life

Wiring diagram

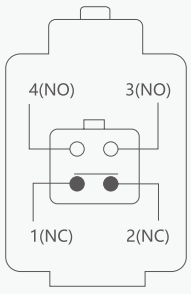

WL Limit Switch

Overall and mounting dimensions(mm)

WL D3

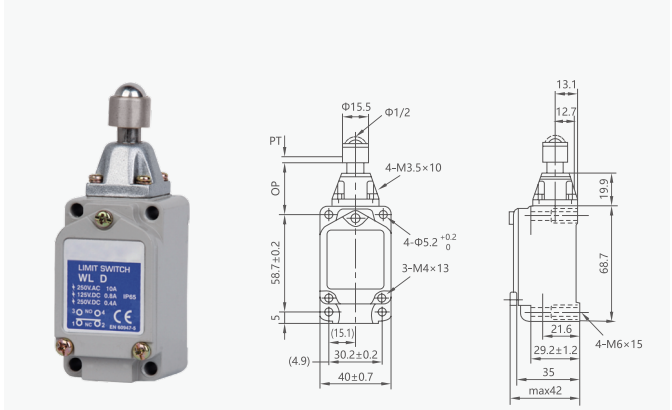

WL CA12-L

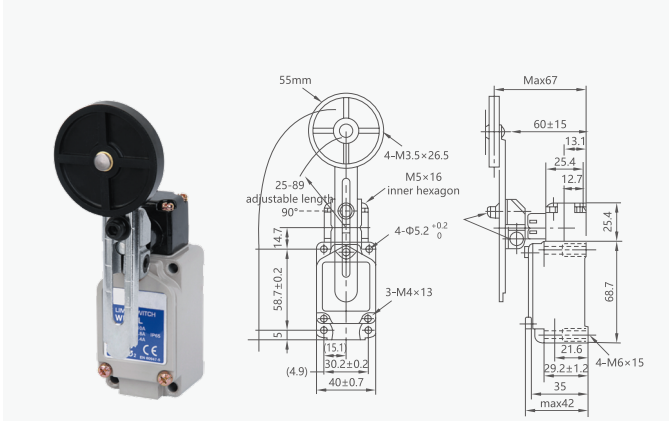

WL D

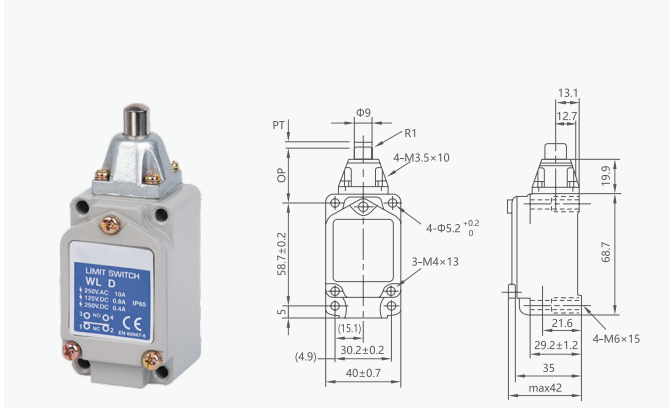

WL D2

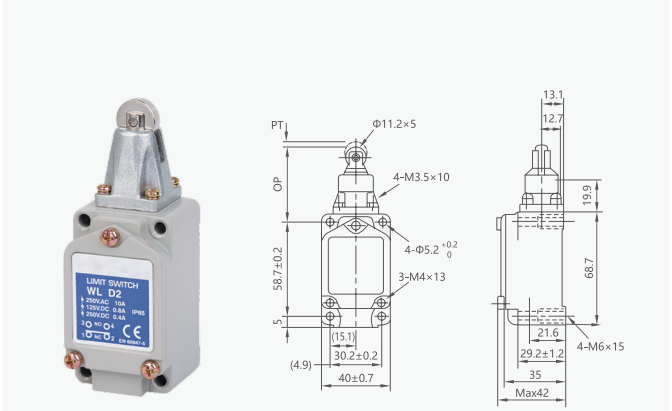

WL CA2

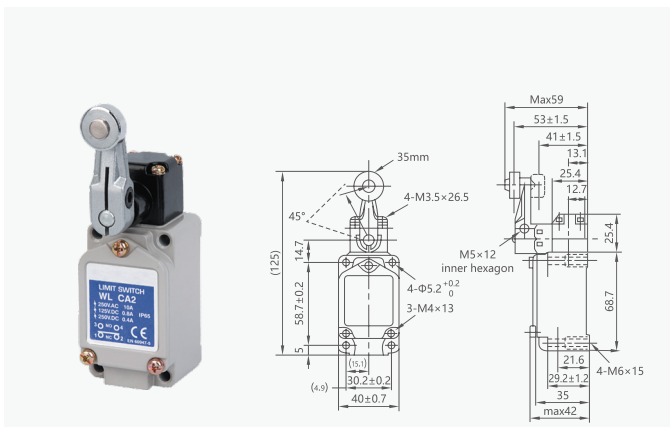

WL CA2-2

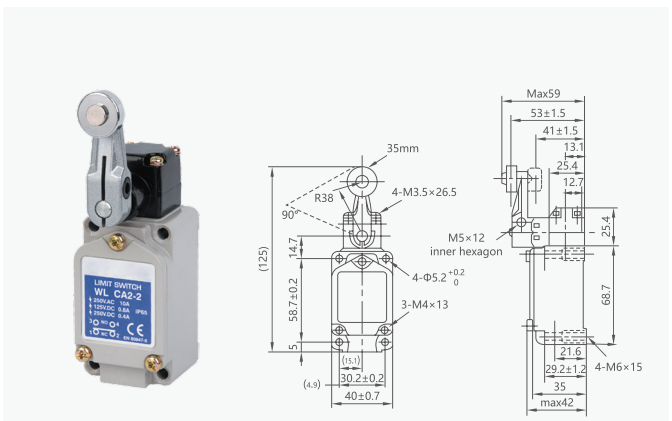

E

WL Limit Switch

WL CA12

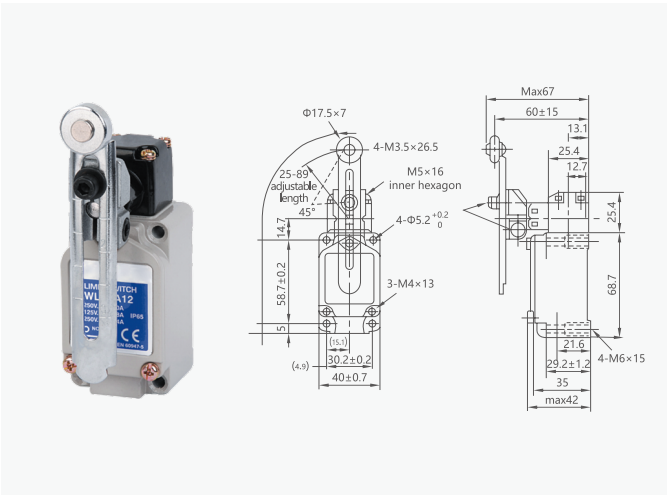

WL CA12-2

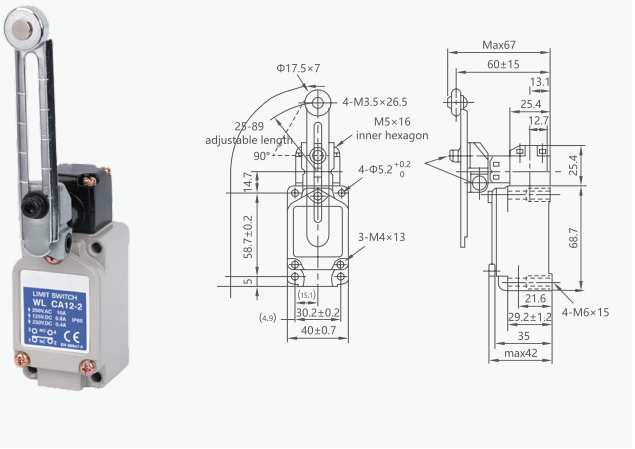

WL CL

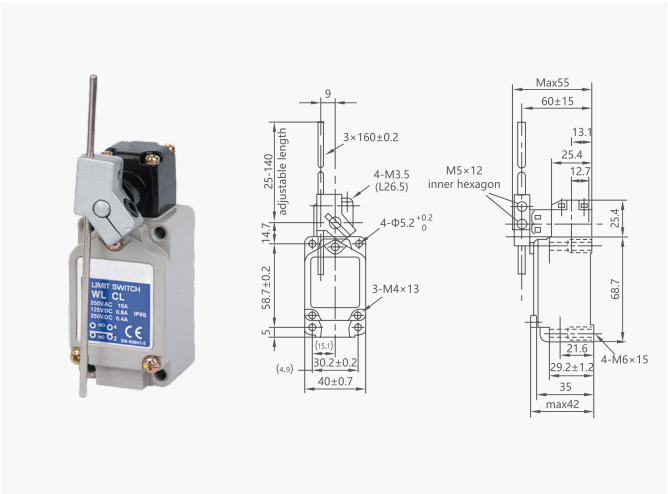

WL CA32-41-43

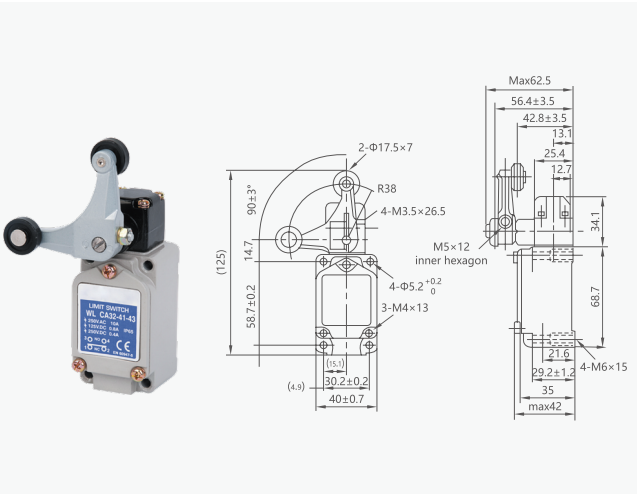

WL NJ-S2

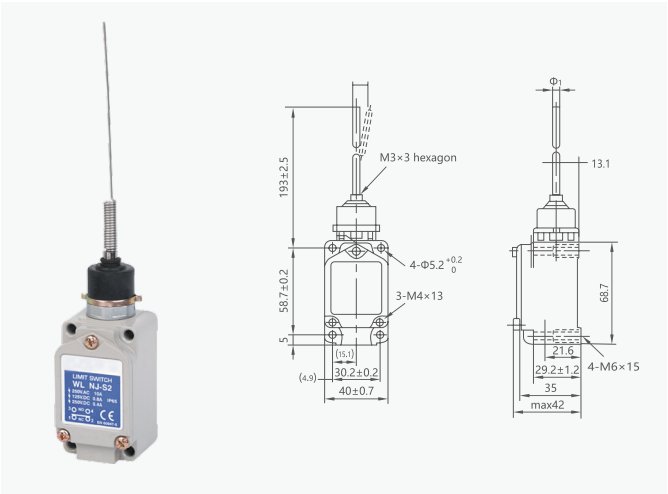

WL NJ

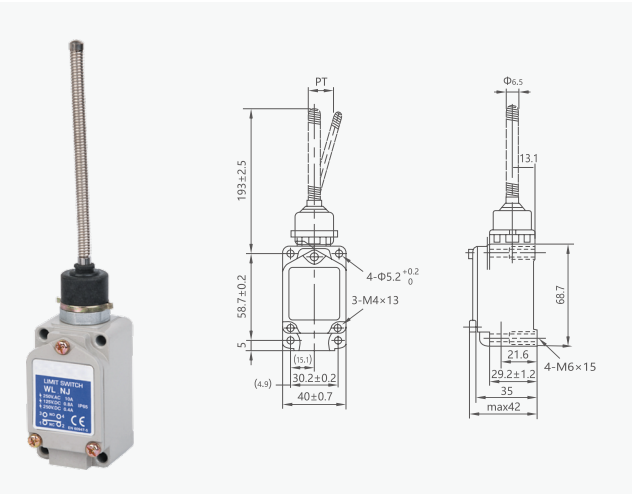

Z-15 Micro Switch

Technical data

Item	Data
Operation speed	0.1mm to 1m/Sec
Contact resistance	Mechanically: 240 times/minute Electically: 20 times/Minute
Insulation resistance	100mΩ above(at 500VDC)
Vibration	Under 20mΩ(initial)
Humidity	Non-contact end: 1000VAC, 50/60Hz for one minute Current parts and noncurrent parts and end and connect position: 2000VAC, 50/60Hz for one minute
Service life	Machine: 400m/Sec² (about 40G's) 1.5mm 10 to 55Hz: 1.5mm pairs swing action
Ambient operating temperature	-25°C to 80°C
Bearing voltage	Below 85%RH
Action frequency	Mechanical: 20000000 times above (at rated ot) Electrical: 500000 times above

Wiring diagram

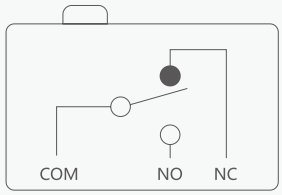

Overall and mounting dimensions(mm)

JM-COVER

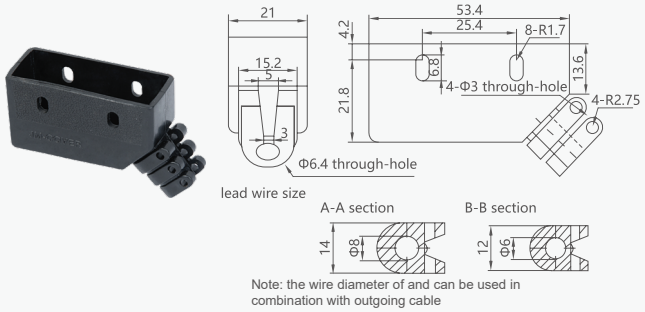

Z-15G-B

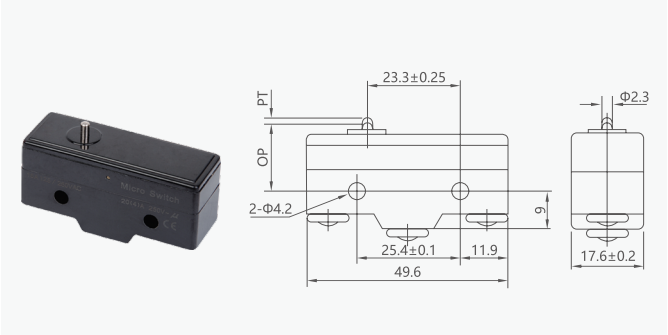

Z-15GL-B

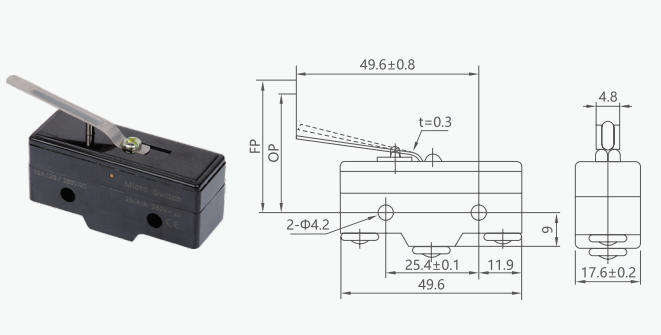

Z-15 Micro Switch

Z-15GL2-B

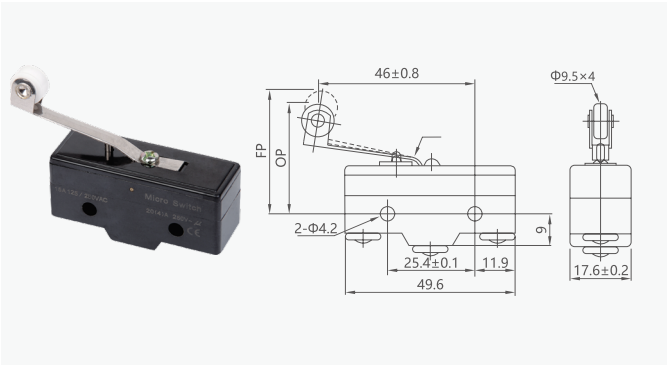

Z-15GS-B

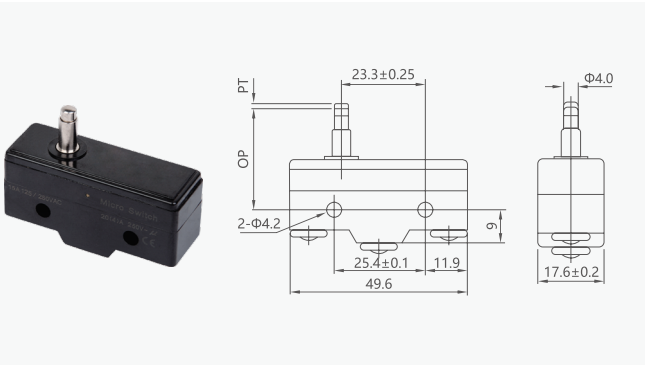

Z-15GD-B

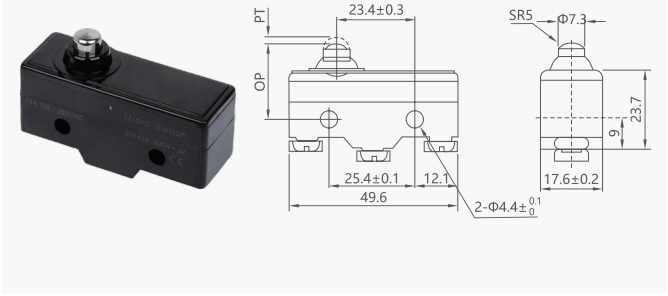

Z-15GQ-B

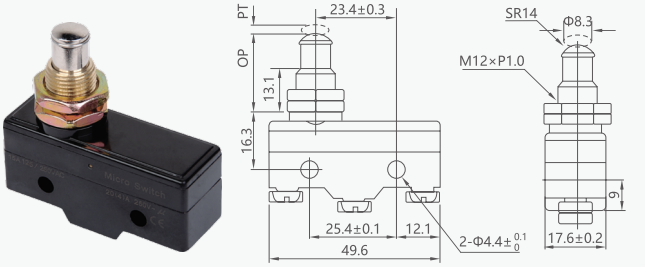

Z-15GQ22-B

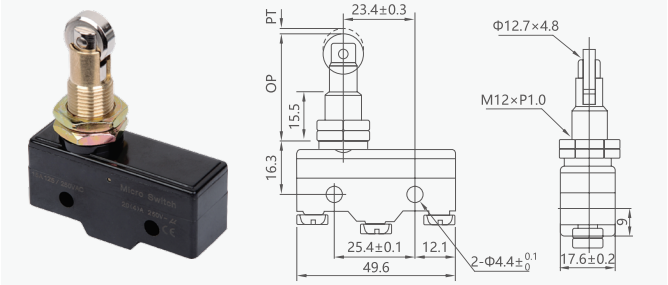

Z-15GQ21-B

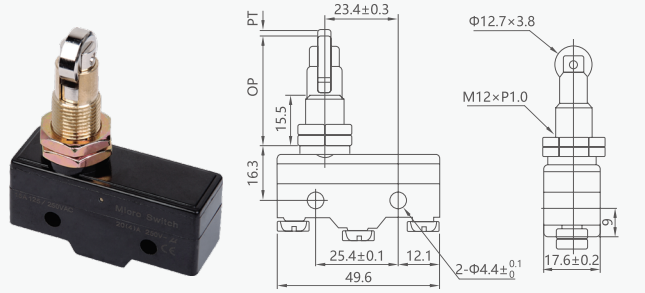

Z-15GW-B

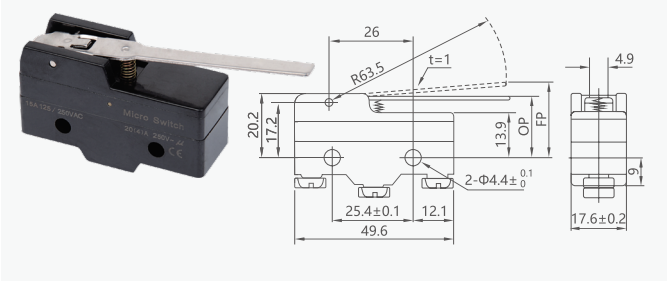

Z-15GW21-B

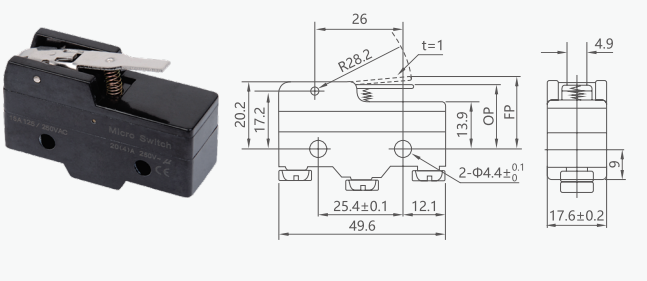

Z-15 Micro Switch

Z-15GW2-B

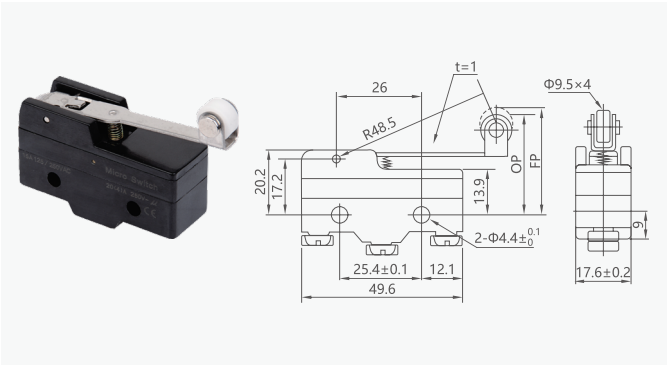

Z-15GW22-B

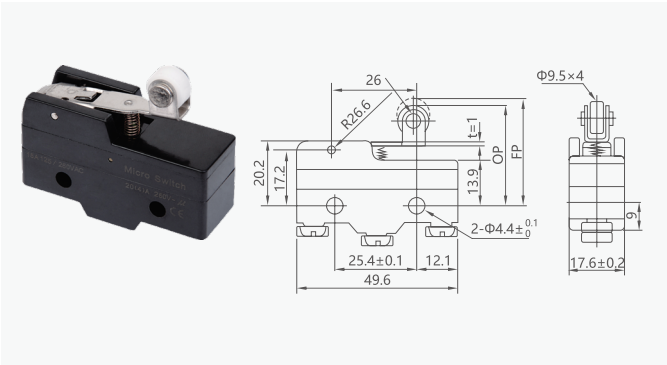

Z-15GW2277-B

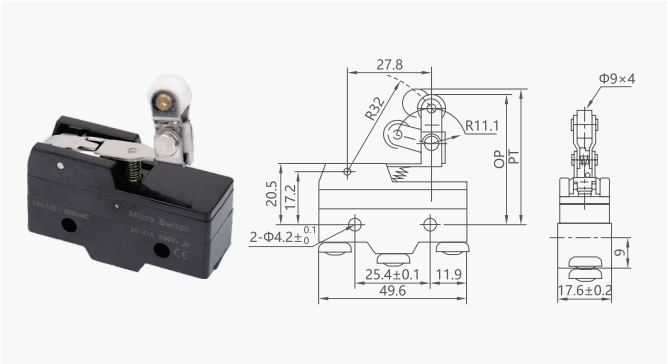

Z-15HW24-B

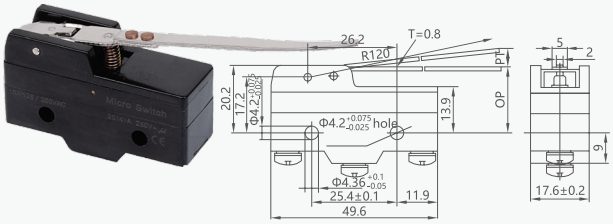

Z-15HW78-B

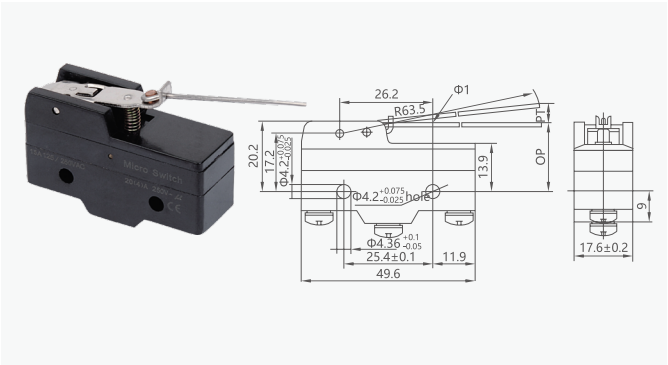

E

D4MC Micro Switch

Technical data

Item		Data
Load	AC 250V	10A
	AC 380V	10A
	DC 125V	5A
	DC 250V	5A
Life	Mechanical	Fifteen million times
	Electrical	Five hundred thousand times
Operation speed		0.05mm~0.5m/s
Operation frequency	Mechanical	120 times/min
	Electrical	20 times/min AC 250V
Insulation resistance		100MΩ DC500V
Contact resistance		Under 15MΩ (Initial value)
With stand voltage (50/60Hz 1min)	Between the terminals of same pole	AC 1000V
	Between charged metal parts	AC 2000V
	Between non-charged metal parts of each terminal	AC 3000V
Vibration	Misoperation	10-55Hz (amplitude 1.5mm)
Protection degree		IP63

Mode / Operation speciality	D4MC-5000	D4MC-5020	D4MC-5040	D4MC-1020	D4MC-1000	D4MC-2000	D4MC-2020
OF (max) RF (min) PT (max) OT (min) MD (max) OP	600g 100g 1.6mm 5mm 0.2mm	600g 100g 1.6mm 5mm 0.2mm	600g 100g 1.6mm 5mm 0.2mm	260g 35g - 2.5mm 1.7mm	170g 25g - 4mm 3mm	200g 40g 10mm 5mm 3mm	300g 40g - 2mm 1.5mm
FT (max) OP (max)	- 21.8±1.2mm	- 33.4±1.2mm	- 33.4±1.2mm	33mm 25±1mm	36mm 25±1mm	51mm 40±1mm	47mm 40±1mm

Wiring diagram

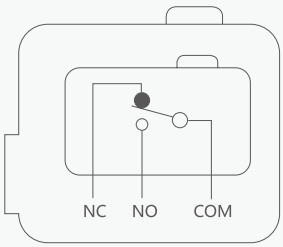

D4MC Micro Switch

Overall and mounting dimensions(mm)

D4MC-1020

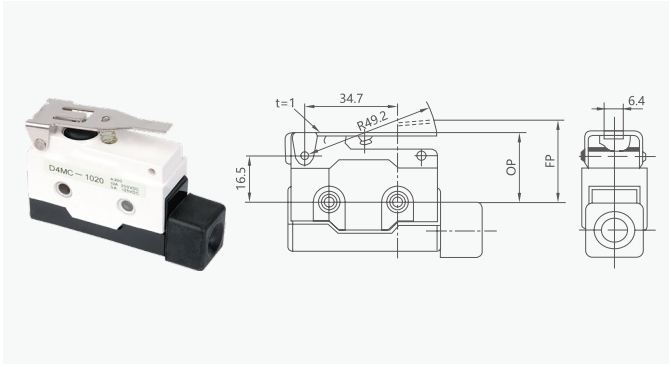

D4MC-1000

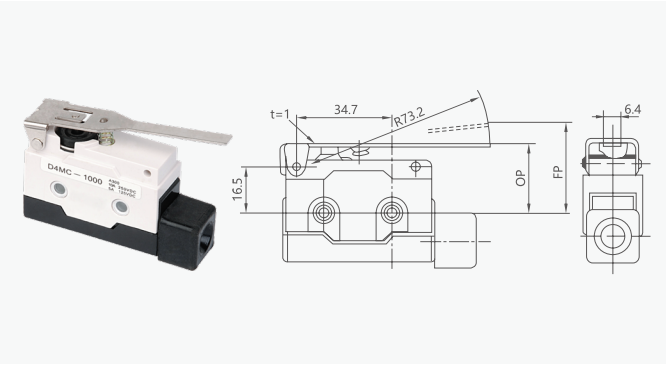

D4MC-2020

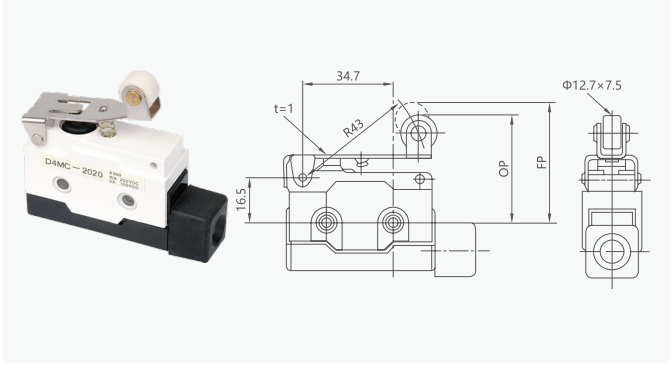

D4MC-2000

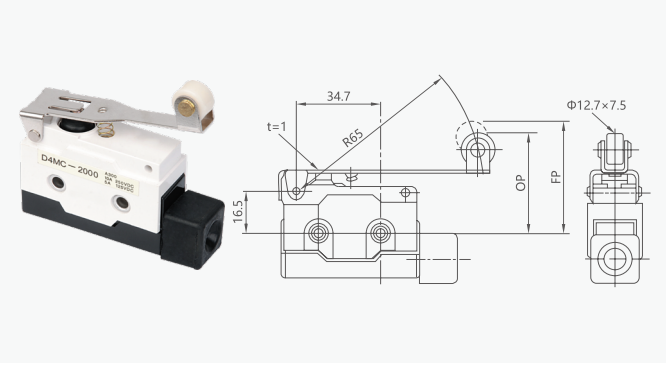

D4MC-3030

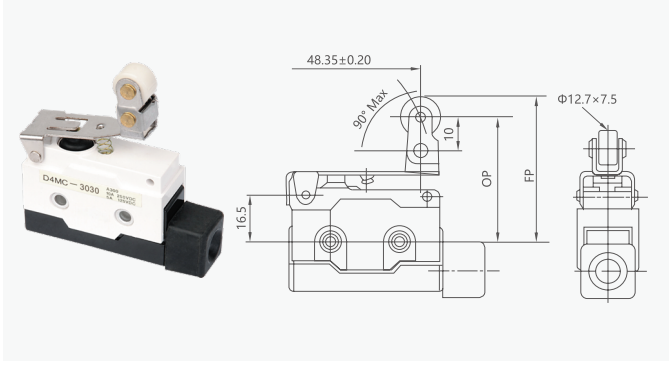

D4MC-5000

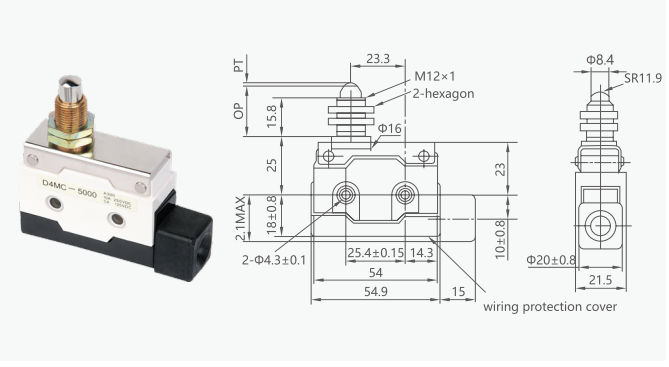

D4MC-5020

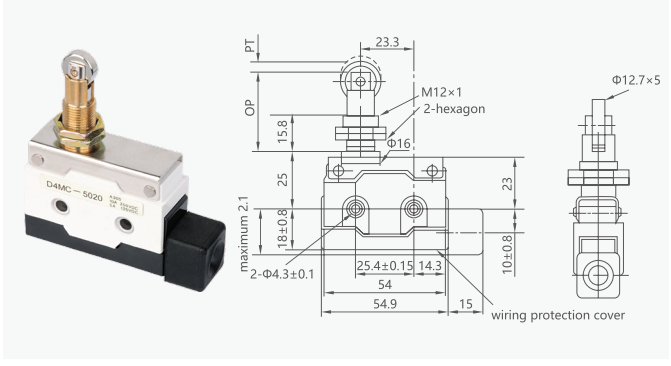

D4MC-5040

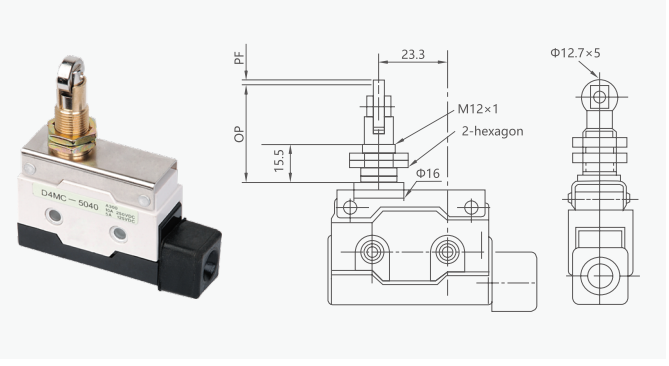

E

AZ Micro Switch

Technical data

Item	Data
Operation speed	0.01mm to 50m/Sec
Action frequency	120 times/Minute
Contact resistance	Under 15mΩ (Initial)
Insulation resistance	100mΩ above (under 500VDC)
Bearing voltage	Non-contact end: 1000VAC, 50/60Hz for one minute, Current parts and non-current parts and end and connect position: 1500VAC, 50/60Hz for one minute
Vibration	Action: 10 to 55Hz: 1.5mm pairs swing
Hitting	Machine: 400m/Sec² (about 40G'S); Action: 100m/Sec² (about 10G'S)
Ambient temperature	-25°C to 80°C
Humidity	Below 95%RH
Service life	Mechanical: 10000000 times above (at rated ot); Electrical: 500000 times above
Protection structure	IEC specification: IP65

Features

1. Side mount switches
2. Momentary contacts
3. Wide choice of heads and actuators
4. Sealed actuators
5. Completely sealed construction
6. Plastic sealed housing

Wiring diagram

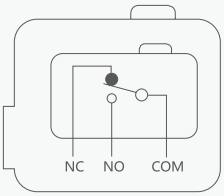

Overall and mounting dimensions(mm)

AZ-7100

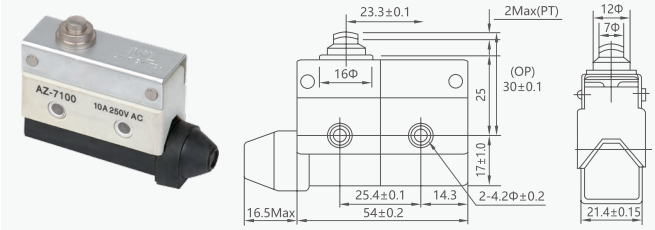

AZ-7110

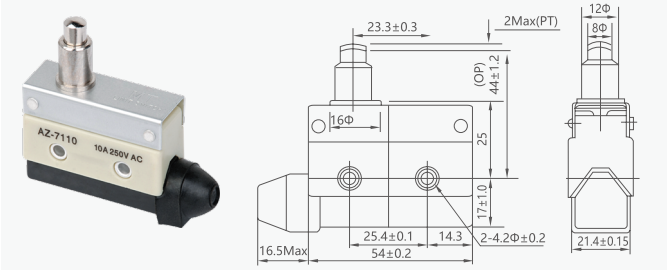

AZ-7140

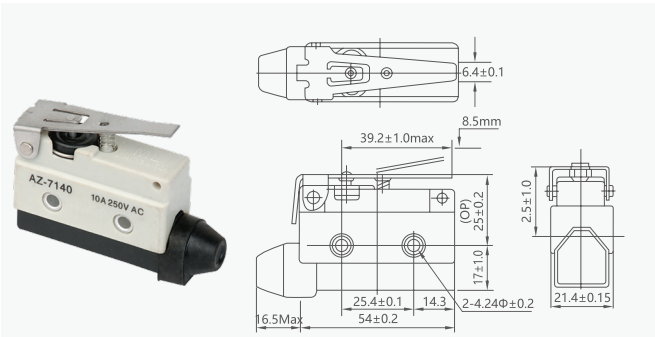

AZ-7120

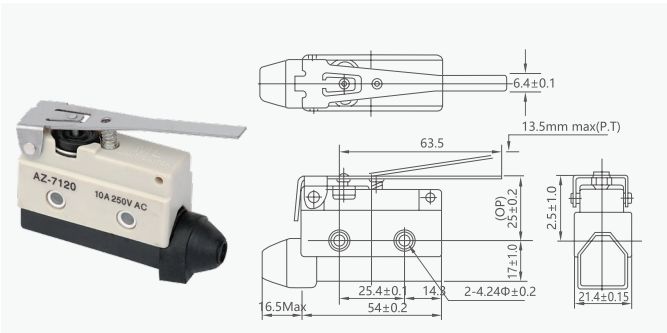

AZ Micro Switch

AZ-7141

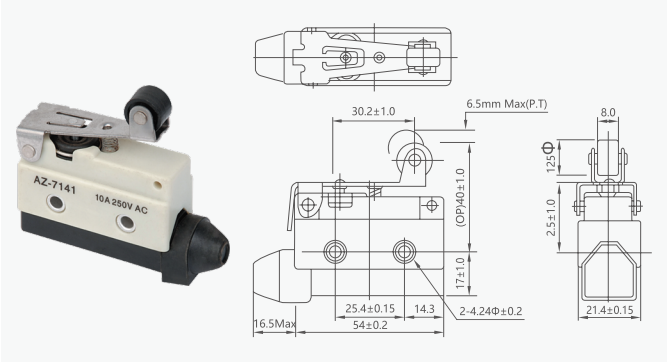

AZ-7144

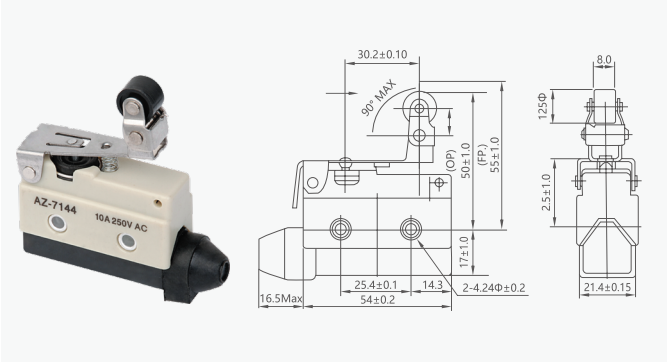

AZ-7121

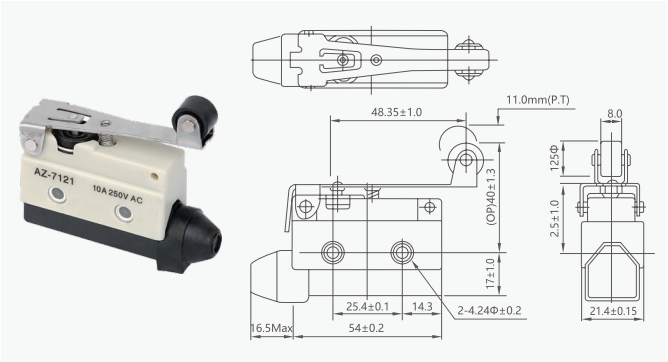

AZ-7124

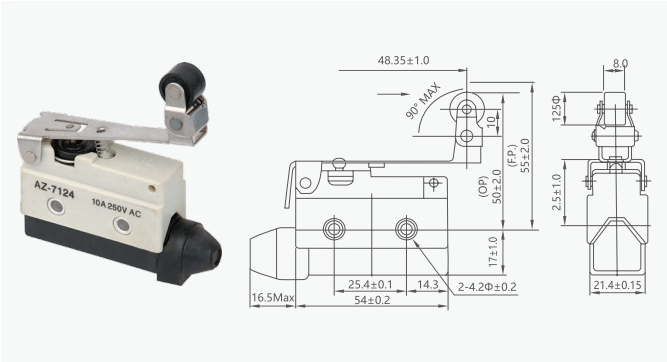

AZ-7310

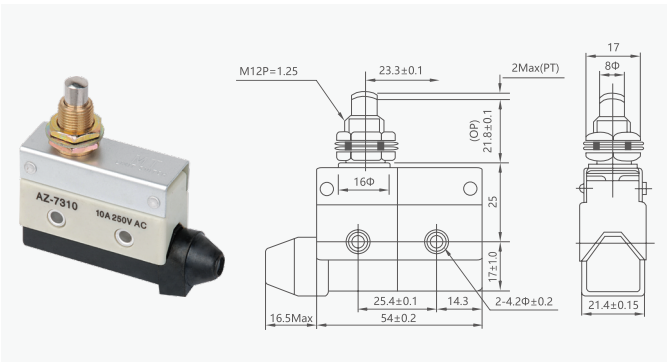

AZ-7311

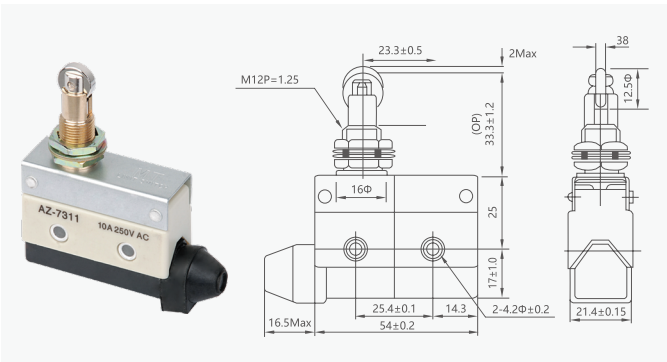

AZ-7312

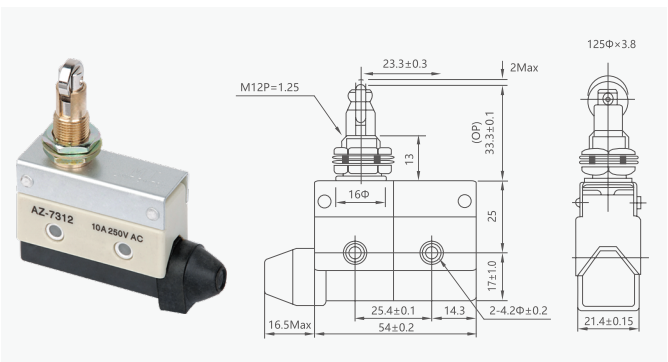

AZ-7166

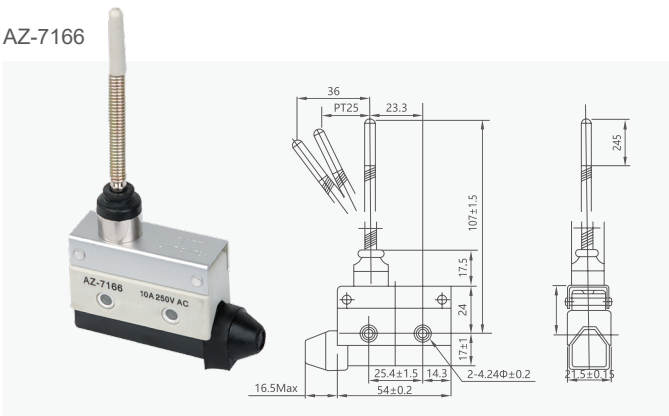

E

V-15 Micro Switch

Technical data

Item	Data
Operation speed	0.1mm to 1m/Sec
Action frequency	Mechanical: 600 times/minute Electical: 60 times/Minute
Contact resistance	Under 15mΩ(initial)
Insulation resistance	100mΩ above(at 500VD
Bearing voltage	Non-contact end: 1000VAC, 50/60Hz for one minute Current parts and noncurrent parts and end and connect position: 1500VAC, 50/60Hz for one minute
Vibration	1.5mm 10 to 55Hz: 1.5mm pairs swing action
Hitting	Machine: 400m/Sec² (about 40G's) Action: 100m/Sec² (about 10G's)
Ambient temperature	-25°C to 80°C
Humidity	Below 85%RH
Service life	Mechanical: 5000000 times above (at rated ot) ; Electrical: 100000 times above
Protection structure	IEC specification: IP65

E

Wiring diagram

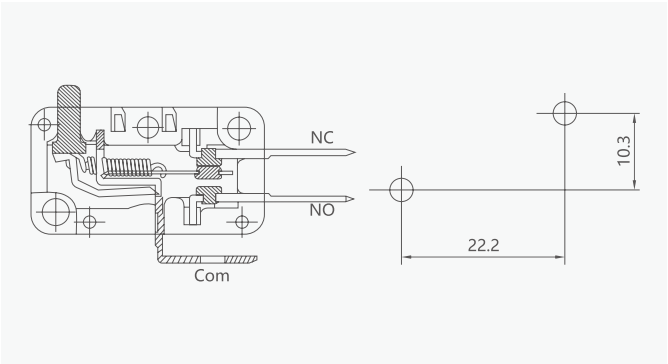

Overall and mounting dimensions(mm)

V-15-1C25

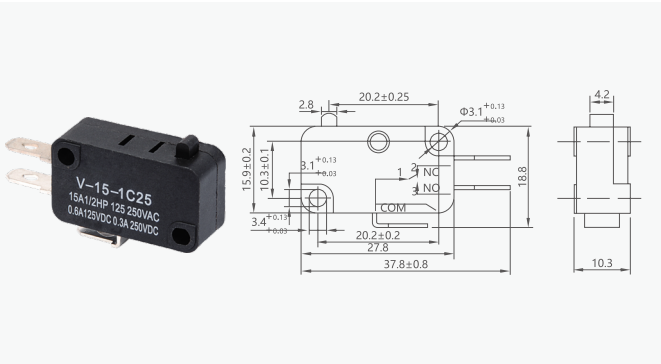

V-151-1C25

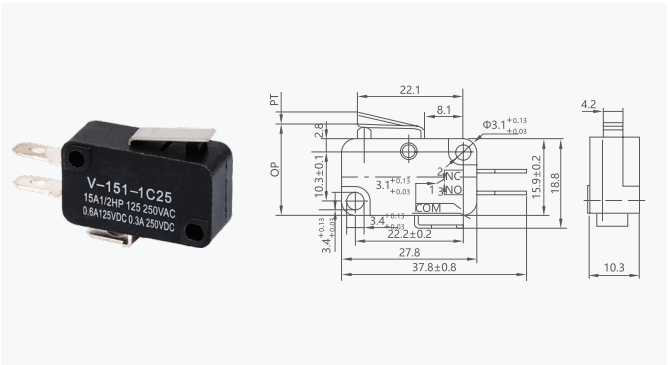

V-152-1C25

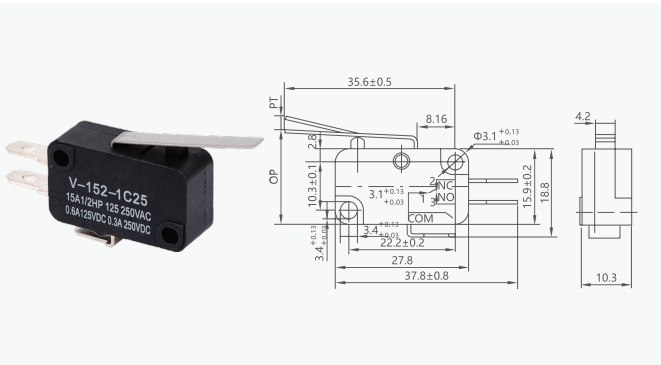

V-15 Micro Switch

V-153-1C25

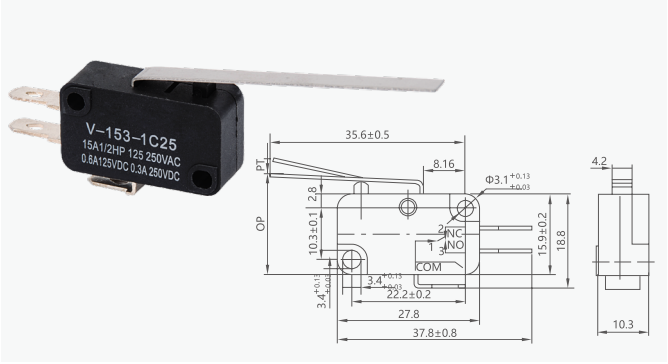

V-154-1C25

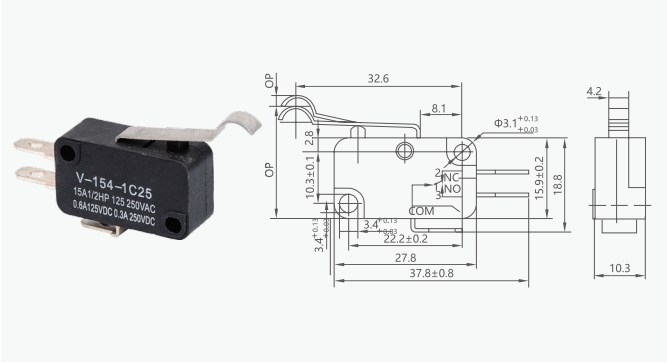

V-155-1C25

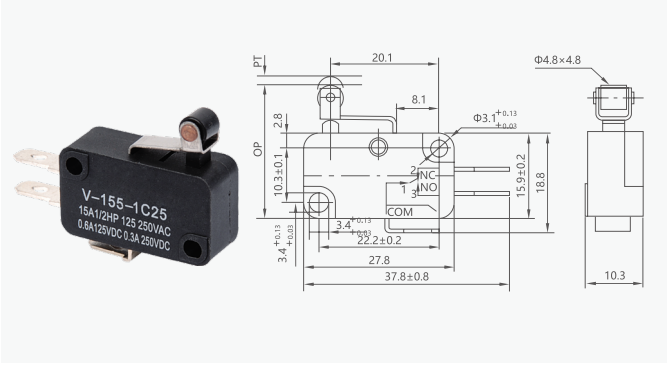

V-156-1C25

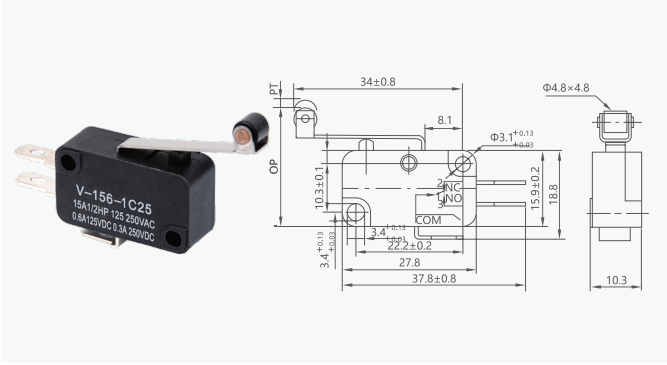

V-155-2C25

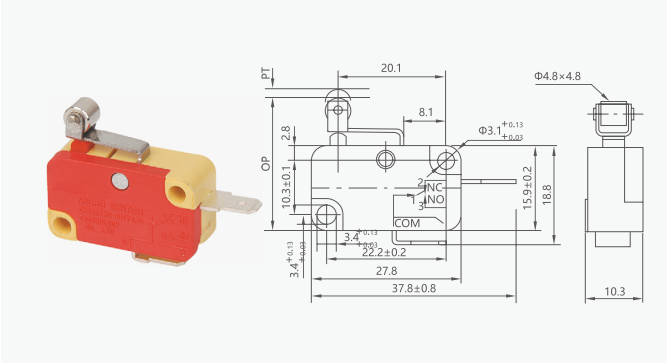

V-155-3C25

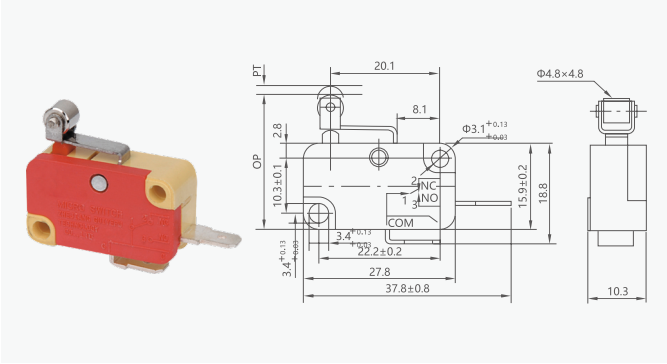

E

Pedal Switch

Features

The pedal switch is to serve at the control circuit of AC 50~60Hz, AC380V, DC220V and current of 3~21A to control electrical unit machine tool and medical equipment.

Standard: IEC337-1

Overall and mounting dimensions(mm)

SFMS-1 Aluminum shell

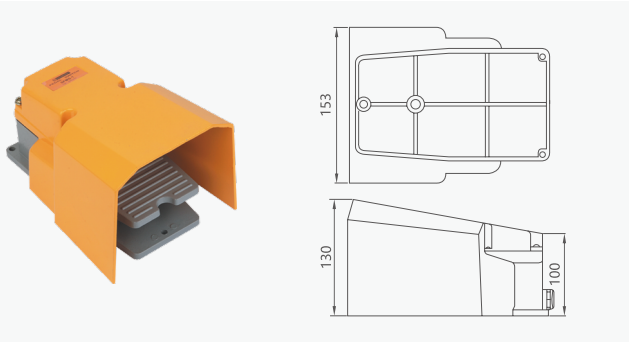

FMS-10 Aluminum shell

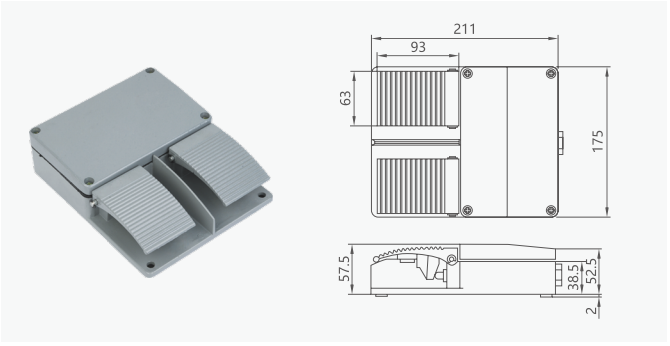

FMS-15 Aluminum shell

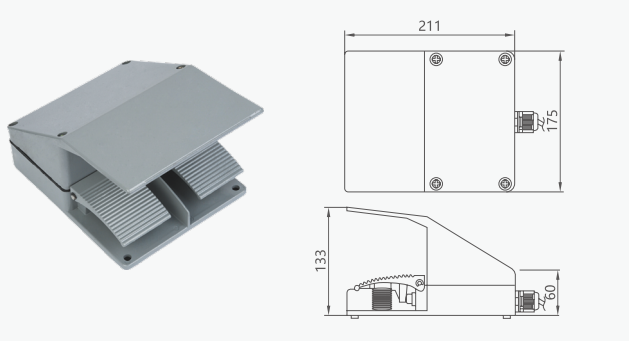

SFM-1 Aluminum shell

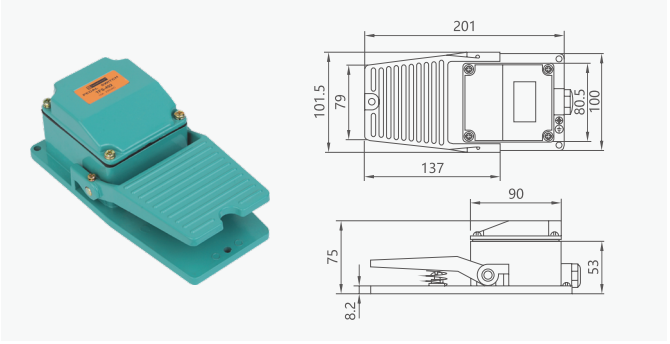

SFMP-1 Aluminum shell

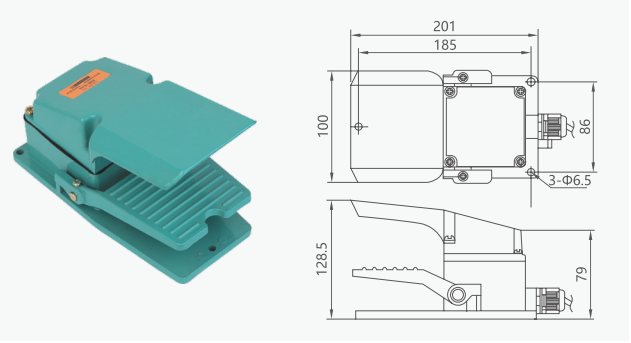

FS-3 Aluminum shell (Medium-sized)

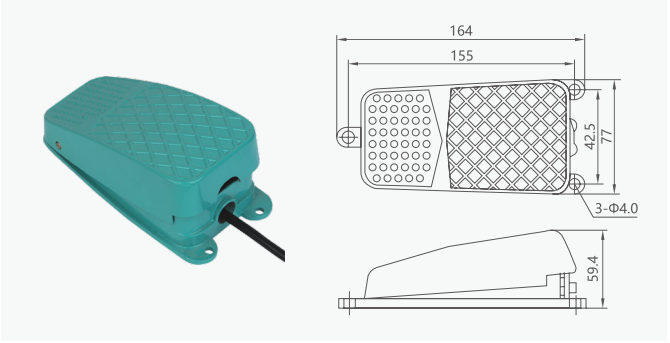

FS-2 Aluminum shell

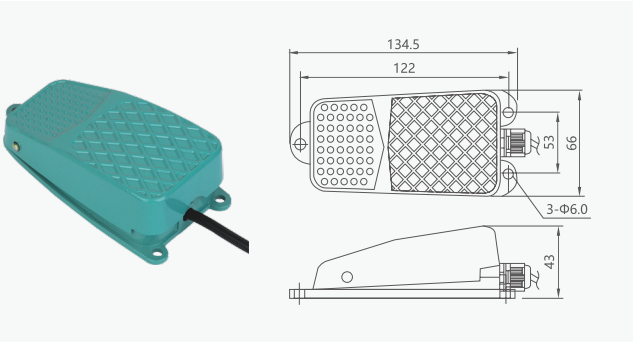

FS-101 Plastic shell (Large)

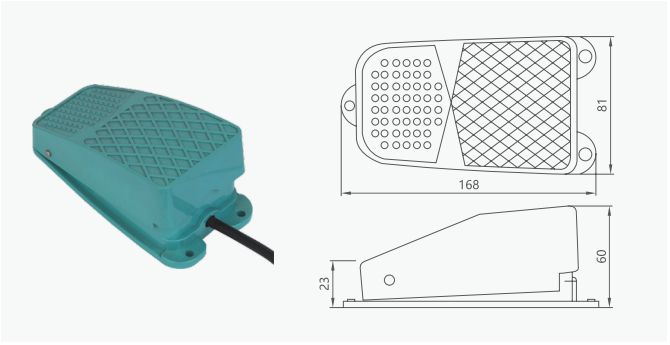

Pedal Switch

YDT1-101 Aluminum shell (Inverted CIS)

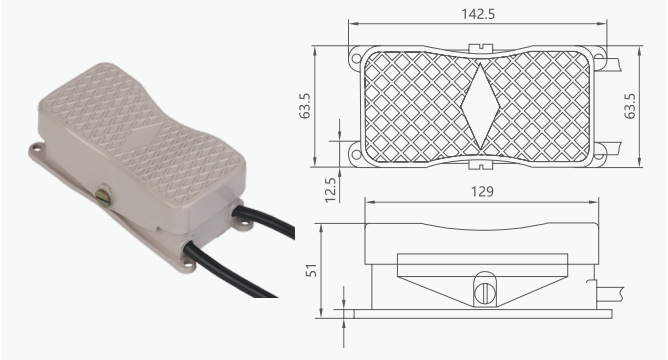

D8107 Plastic shell



VFS-201 Plastic shell



FS-1 Ironclad

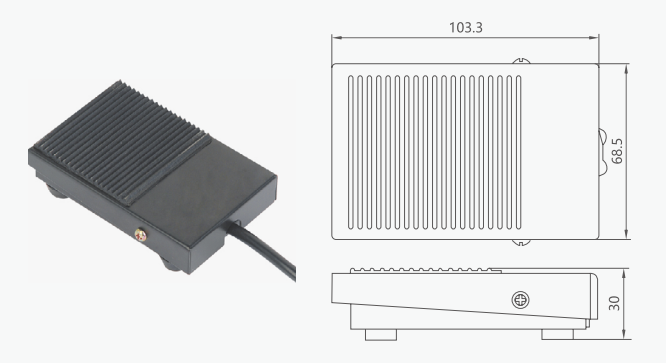

FS-01 Plastic shell

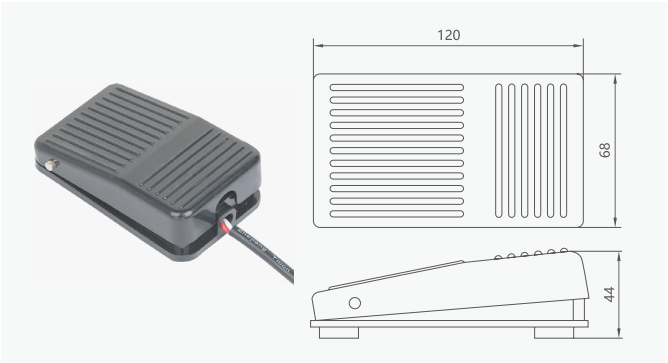

SFM-5

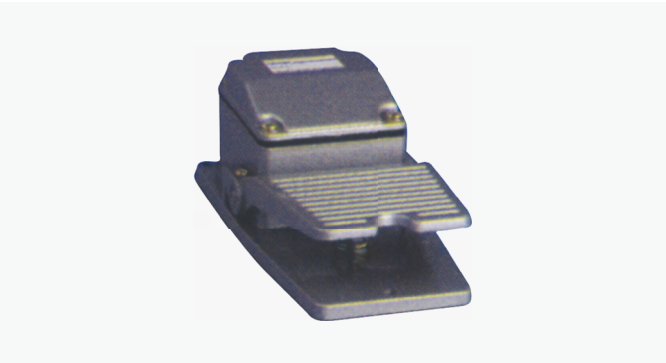

YC-16H

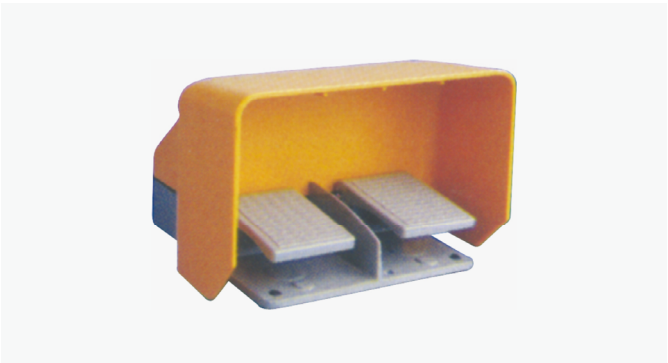

KH-8012



E

LW28 Universal Changeover Switch



20A



20A-V



20A-A



63A



160A

General

LW28 Series Universal changeover switch mainly used for AC 50/60Hz, rated voltage up to 380V and below, DC voltage up to 220V, rated current to 160A electrical circuit for manually infrequent making or breaking the circuit for the purposes of control and conversion ,can also controlling three-phase asynchronous motors and circuit directly as the purposes of master control and measurement. The products widely used, instead of the various national switch, can be used as the circuit control switch, measuring equipment switches, motor control switches and the master control switch, and welding machine switch and so on.

standard: IEC60947-3

Operating conditions

1. The ambient air temperature does not exceed +40°C, the average temperature within 24 hours and not more than +35°C.The ambient air temperature is not lower than -5°C.
2. Installation site altitude does not exceed 2000m
3. The relative humidity of the air no more than 50% when the maximum temperature is +40°C and at a lower temperature allows a higher relative humidity, such as when temperature is 20°C the relative humidity reaches 90%.
4. Special measures should be taken for condensation occasionally due to temperature changes.

Type designation

For use to master control

LW28		Rated thermal current		Poles	Station
LW28	-	20	/	2P	2
Universal changeover switch		10:10A 20:20A 25:25A 32:32A 63:63A 125:125A 160:160A 200:200A 315:315A 400:400A		2P 3P 4P 5P 6P	2 3 4 5 6 7
				V: Voltage meter A: Ammeter	

Note: If there are special wiring requirements, please provide the wiring diagram or contact us

LW28 Universal Changeover Switch

Technical data

The following table shows the main technical parameters of the transfer switch

Table 2

Model	Ith A	Ui V	Ue V	AC-21A	AC-22A	AC-23A		AC-2		AC-3		AC-4		AC-15	DC-13
				Ie A	Ie A	Ie A	P kW	Ie A	P kW	Ie A	P kW	Ie A	P kW	Ie A	Ie A
LW28-10	10	660	240		10	7.5	1.8	7.5	2.5	5.5	1.5	1.75	0.37	2.5	
	10	660	440		10	7.5	3.0	7.5	3.7	5.5	2.2	1.75	0.55	1.5	
LW28-20	20	660	440		20	15	7.5	15	7.5	11	5.5	3.5	1.5	4	
	20	660	240											5	1
	20	660	120												5
LW28-25	25	660	440		25	22	11	22	11	15	7.5	6.5	3	5	
	25	660	240											8	1.5
	25	660	120		32	30	15	30	15	22	11	11	5.5		9
LW28-32	32	660	440											6	
	32	660	240											14	11
	32	660	120												25
LW28-63	63	660	440		63	57	30	57	30	36	18.5	15	7.5		
	63	660	120												55
LW28-125	125	660	440		125	90	45	90	45	75	30	30	12		90
LW28-160	160	660	440		160	135	75	135	55	95	37	55	15		110

The following table shows the relevant dimension of the transfer switch

Table 3

Model	Panel Specification	Dimensions(mm)				Model	Panel Specification	Dimensions(mm)			
		A	B	C	L			A	B	C	L
LW28-10	M0 Square	30	30	28	22+8n	LW28-32	M2 Square	64	64	58	29.2+12.8n
LW28-20	M1 Square	48	48	43	22+9.6n		M2 Rectangle	64	80	58	29.2+12.8n
	M2 Square	64	64	43	25+9.6n		M3 Square	88	88	58	29.2+12.8n
	M2 Rectangle	64	80	43	25+9.6n	LW28-63	M2 Square	64	64	66	29.2+21.5n
LW28-20c	M2 Square	64	64	60	42.5+12.6n		M2 Rectangle	64	80	66	29.2+21.5n
	M3 Square	88	88	60	42.5+12.6n	LW28-125	M3 Square	88	88	84	35+26.5n
LW28-25	M1 Square	48	48	45.2	23+12.8n	LW28-160	M3 Square	88	88	88	35+32.5n
	M1 Rectangle	48	60	45.2	23+12.8n	LW28-315	M4 Square	130	130	126	39.5+38.5n
	M2 Square	64	64	45.2	26.5+12.8n						
	M2 Rectangle	64	80	45.2	26.5+12.8n						

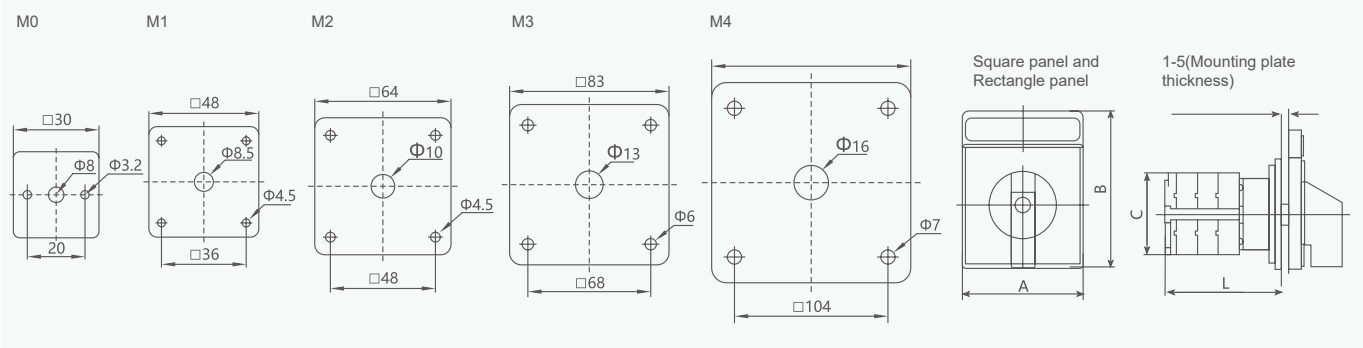

E

LW26 Universal Changeover Switch





General

LW26 Series Universal changeover switch mainly used for AC 50/60Hz, rated voltage up to 380V and below, DC voltage up to 220V, rated current to 160A electrical circuit for manually infrequent making or breaking the circuit for the purposes of control and conversion ,can also controlling three-phase asynchronous motors and circuit directly as the purposes of master control and measurement. The products widely used, instead of the various national switch, can be used as the circuit control switch, measuring equipment switches, motor control switches and the master control switch, and welding machine switch and so on.

standard: IEC60947-3

Operating conditions

1. The ambient air temperature does not exceed +40°C, the average temperature within 24 hours and not more than +35°C.The ambient air temperature is not lower than -5°C.
2. Installation site altitude does not exceed 2000m
3. The relative humidity of the air no more than 50% when the maximum temperature is +40°C and at a lower temperature allows a higher relative humidity, such as when temperature is 20°C the relative humidity reaches 90%.
4. Special measures should be taken for condensation occasionally due to temperature changes.

Type designation

For use to master control

LW26		Rated thermal current		Poles	Station
LW26	-	20	/	2P	2
Universal changeover switch		10:10A 20:20A 25:25A 32:32A 63:63A 125:125A 160:160A 200:200A 315:315A 400:400A		2P 3P 4P 5P 6P	2 3 4 5 6 7
				V: Voltage meter A: Ammeter	

Note: If there are special wiring requirements, please provide the wiring diagram or contact us

LW26 Universal Changeover Switch

Technical data

The following table shows the main technical parameters of the transfer switch

Table 2

Model	Ith A	Ui V	Ue V	AC-21A	AC-22A	AC-23A		AC-2		AC-3		AC-4		AC-15	DC-13
				Ie A	Ie A	Ie A	P kW	Ie A	P kW	Ie A	P kW	Ie A	P kW	Ie A	Ie A
LW26-10	10	660	240		10	7.5	1.8	7.5	2.5	5.5	1.5	1.75	0.37	2.5	
	10	660	440		10	7.5	3.0	7.5	3.7	5.5	2.2	1.75	0.55	1.5	
LW26-20	20	660	440		20	15	7.5	15	7.5	11	5.5	3.5	1.5	4	
	20	660	240											5	1
	20	660	120												5
LW26-25	25	660	440		25	22	11	22	11	15	7.5	6.5	3	5	
	25	660	240											8	1.5
	25	660	120		32	30	15	30	15	22	11	11	5.5		9
LW26-32	32	660	440											6	
	32	660	240											14	11
	32	660	120												25
LW26-63	63	660	440		63	57	30	57	30	36	18.5	15	7.5		
	63	660	120												55
LW26-125	125	660	440		125	90	45	90	45	75	30	30	12		90
LW26-160	160	660	440		160	135	75	135	55	95	37	55	15		110

The following table shows the relevant dimension of the transfer switch

Table 3

Model	Panel Specification	Dimensions(mm)				Model	Panel Specification	Dimensions(mm)			
		A	B	C	L			A	B	C	L
LW26-10	M0 Square	30	30	26	22+8n	LW26-32	M2 Square	64	64	58	29.2+12.8n
LW26-20	M1 Square	48	48	43	22+9.6n		M2 Rectangle	64	80	58	29.2+12.8n
	M2 Square	64	64	43	25+9.6n		M3 Square	88	88	58	29.2+12.8n
	M2 Rectangle	64	80	43	25+9.6n	LW26-63	M2 Square	64	64	66	29.2+21.5n
LW26-20c	M2 Square	64	64	60	42.5+12.6n		M2 Rectangle	64	80	66	29.2+21.5n
	M3 Square	88	88	60	42.5+12.6n		M3 Square	88	88	66	29.2+21.5n
LW26-25	M1 Square	48	48	45.2	23+12.8n	LW26-125	M3 Square	88	88	84	35+26.5n
	M1 Rectangle	48	60	45.2	23+12.8n	LW26-160	M3 Square	88	88	88	35+32.5n
	M2 Square	64	64	45.2	26.5+12.8n	LW26-315	M4 Square	130	130	126	39.5+38.5n
	M2 Rectangle	64	80	45.2	26.5+12.8n						

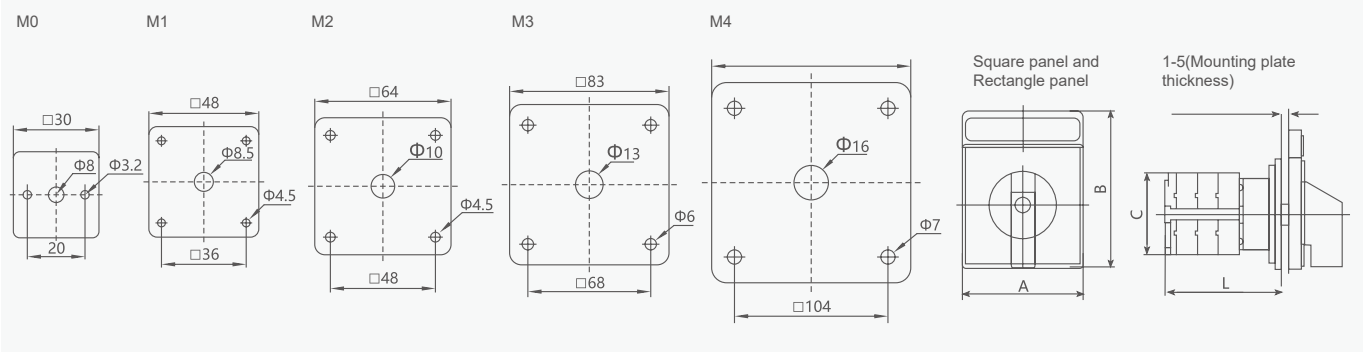

E

EP Universal Changeover Switch











General

EP is mainly used for electrical equipment cabinets or three-phase asynchronous motor load start shifting and steering, used as the main and auxiliary circuits conversion, can fully replace other switches.

Type designation

EP □ □ □

- 20A has A and B, represented by A and B
- Operation figure number or auxiliary specification code
- Rated thermal current
- Universal Changeover Switch

Technical data

Model specification			EP-20			EP-25					EP-32				
Rated thermal current		A		20		25					32				
Rated operating voltage		V	110	220	440	110	220	440	500	690	110	220	400	500	690
Rated operating current	AC-21A	A			20					25					32
	AC-22A	A			6					20					32
	DC-20	A		20			25					32			
Rated control frequency	AC-23A	kW		5			7.5	11		15		11	18.5		22
	AC-3	kW		4	7.5		5.5	7.5		11		7.5	15		18.5
	AC-4	kW		22	5.5		2.2	4	4			3	5.5	5.5	
	DC-23	kW	0.77	12	3	2	2.2				2	2.2			

Model specification			EP-50					EP-75				
Rated thermal current		A	50					75				
Rated operating voltage		V	110	220	440	500	690	110	220	400	500	690
Rated operating current	AC-21A	A					50					75
	AC-22A	A					40					63
	DC-20	A		50					75			
Rated control frequency	AC-23A	kW		15	22		30		18.5	30		37
	AC-3	kW		11	18.5		22		15	22		30
	AC-4	kW		5.5	7.5	9			7.5	11	15	
	DC-23	kW	3	6				4	8			

EP Universal Changeover Switch

Overall and mounting dimensions(mm)

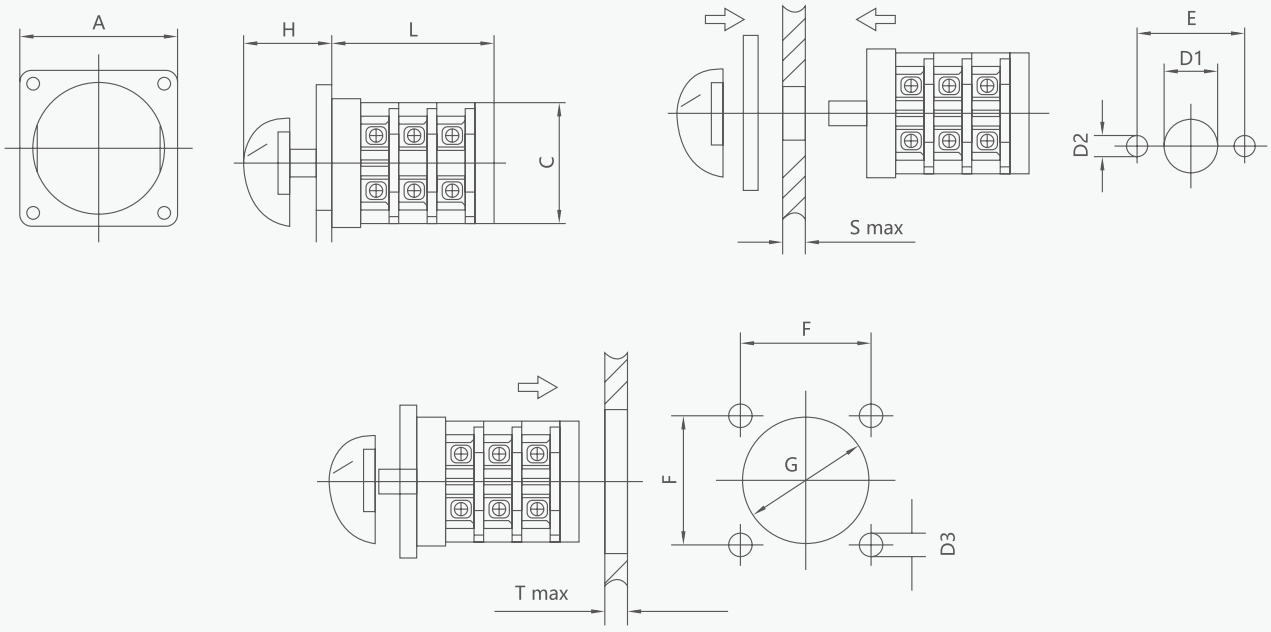

Technical data

Model specification	Model specification	Dimensions(mm)			Mounting dimensions(mm)							
		C	H	L	E	D1	D2	S	F	G	D3	T
EP-20	□54	φ44	38	25+12n	32	φ9.5	φ3.2	1.5	35	φ45	φ4.5	6
EP-20	□72	φ44	38	25+12n	32	φ9.5	φ3.2	1.5	58	φ45	φ4.5	6
EP-25	□72	φ59	36	23+13n	33	φ9.5	φ3.2	1.5	58	φ64	φ4.5	6
EP-25	□105	φ59	53	23+13n	33	φ9.5	φ3.2	1.5	85	φ64	φ4.5	6
EP-32	□72	φ59	36	23+18n	33	φ9.5	φ3.2	1.5	58	φ64	φ4.5	6
EP-32	□105	φ59	53	23+18n	33	φ9.5	φ3.2	1.5	85	φ64	φ4.5	6
EP-50	□105	φ80	53	34+18n	46	φ13	φ5.3	3	85	φ90	φ5.5	8
EP-75	□105	φ80	53	34+27n	46	φ13	φ5.3	3	85	φ90	φ5.5	8

CS-68 Universal Changeover Switch



General

The multi-stage selector switch is a multi-purpose product, which can be widely used from the power switch to the CNC control panel. In terms of power switch use, alloy silver contacts should be used due to its high voltage and high current. On the CNC control panel, gold contacts should be used due to its low voltage and low current. It should be clearly distinguished, and the general products do not clearly mark the two, which will increase the damage rate or cause poor contact. In view of this, the company has launched a multi-stage switch with different types of force, where the high voltage, high current and low voltage, low current are distinguished by blue and white,to achieve the effect of work and prolong the life of the product.



Technical data

	Low voltage, low current (Contact seat in white)	High voltage, high current (Contact seat in blue)
Contact capacity	24V 0.1A	600V 15A
Contact resistance	Below 10m during the early	Below 500m during the early
Withstanding Voltage	220VAC 1min	
Insulation resistance	Above 100m 500VAC	
Lifetime	Electrical life: above 100000 Mechanical life: above 100000	

Operation	Manual Reset	Automatic reset
Switching angle	30°, 45°, 60°, 90°	45°
Number of switching segments	2-12	2-3

Overall and mounting dimensions(mm)

Dimension drawing

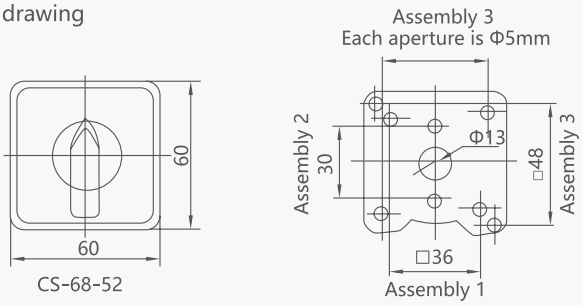

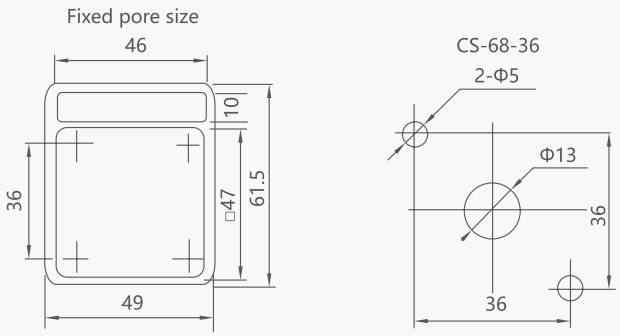

LW28GS Padlock Type Power Cut Off Switch



General

LW28GS series Padlock type Power cut off switch is a derived product of LW28 universal changeover switch. The main use to the power cut-off switch of machine tool that can be locked by a padlock, in the open position(“O” or “OFF”)and on position (“1” or “ON”)can be locked by a padlock to prevent the misuse and operation control by unauthorized personnel.

The product comply with GB14048.3-2001, IEC60947-3.

Model specification		LW28GS -20	LW28GS -25	LW28GS -32	LW28GS -63	LW28GS -125	LW28GS-160
Rated operating voltage Ue V		440	440	440	440	440	440
Rated thermal current A		20	25	32	63	125	160
Rated operating current	AC-21A	20	25	32	63	100	150
	AC-22A	20	25	32	63	100	150
	AC-23A	15	22	30	57	90	135
Rated control frequency	AC-23A	7.5	11	15	30	45	75
Operating cycle P kW	No-load	8500	8500	8500	8500	8500	8500
	Load	1500	1500	1500	1500	1500	1500
	The total load	10000	10000	10000	10000	10000	10000

Dimensions and Mounting Dimensions

LW28GS-□/□-□

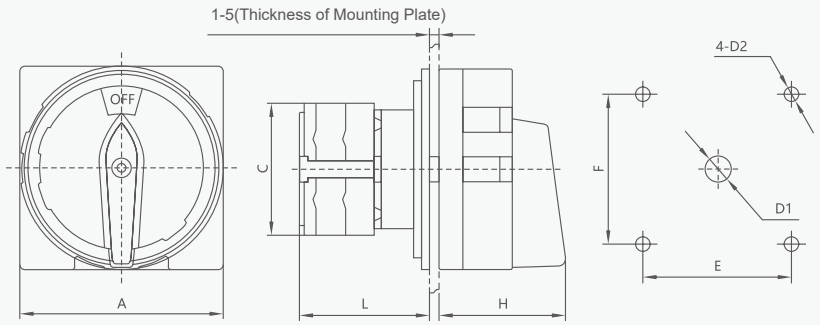

Model specification	Panel specification	Dimensions(mm)				Mounting dimensions(mm)			
		A	C	L	H	E	F	D1	D2
LW28GS-20/04-1	M1	□48	43	42	33	36	36	φ8.5	φ4.5
LW28GS-20/04-2	M2	□64	43	43	42	48	48	φ10	φ4.5
LW28GS-25/04-1	M1	□48	45.2	50	33	36	36	φ8.5	φ4.5
LW28GS-25/04-2	M2	□64	45.2	51	42	48	48	φ10	φ4.5
LW28GS-32/04-2	M2	□64	58	55	42	48	48	φ10	φ4.5
LW28GS-32/04-3	M3	□88	58	55	52	68	68	φ13	φ6
LW28GS-63/04-2	M2	□64	66	72.5	42	48	48	φ10	φ4.5
LW28GS-63/04-3	M3	□88	66	72.5	52	68	68	φ13	φ6
LW28GS-125/04-3	M3	□88	84	88	52	68	68	φ13	φ6
LW28GS-160/04-3	M3	□88	88	100	52	68	68	φ13	φ6

LW26GS Padlock Type Power Cut Off Switch



General

LW26GS series Padlock type Power cut off switch is a derived product of LW26 universal changeover switch. The main use to the power cut-off switch of machine tool that can be locked by a padlock, in the open position(“O” or “OFF”)and on position (“1” or “ON”)can be locked by a padlock to prevent the misuse and operation control by unauthorized personnel.

The product comply with GB14048.3-2001, IEC60947-3.

Model specification		LW26GS -20	LW26GS -25	LW26GS -32	LW26GS -63	LW26GS -125	LW26GS-160
Rated operating voltage Ue V		440	440	440	440	440	440
Rated thermal current A		20	25	32	63	125	160
Rated operating current	AC-21A	20	25	32	63	100	150
	AC-22A	20	25	32	63	100	150
	AC-23A	15	22	30	57	90	135
Rated control frequency	AC-23A	7.5	11	15	30	45	75
Operating cycle P kW	No-load	8500	8500	8500	8500	8500	8500
	Load	1500	1500	1500	1500	1500	1500
	The total load	10000	10000	10000	10000	10000	10000

Dimensions and Mounting Dimensions

LW26GS-□/□-□

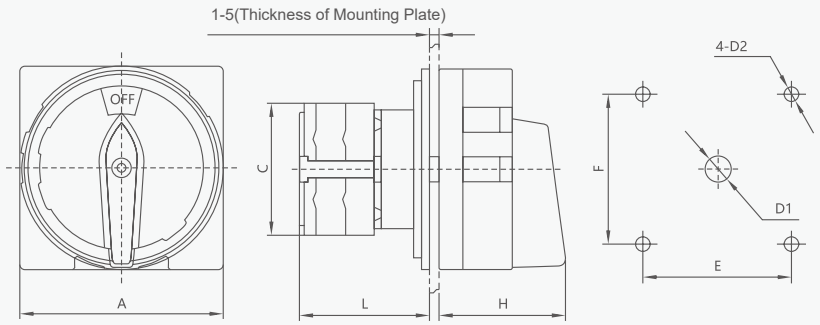

Model specification	Panel specification	Dimensions(mm)				Mounting dimensions(mm)			
		A	C	L	H	E	F	D1	D2
LW26GS-20/04-1	M1	□48	43	42	33	36	36	φ8.5	φ4.5
LW26GS-20/04-2	M2	□64	43	43	42	48	48	φ10	φ4.5
LW26GS-25/04-1	M1	□48	45.2	50	33	36	36	φ8.5	φ4.5
LW26GS-25/04-2	M2	□64	45.2	51	42	48	48	φ10	φ4.5
LW26GS-32/04-2	M2	□64	58	55	42	48	48	φ10	φ4.5
LW26GS-32/04-3	M3	□88	58	55	52	68	68	φ13	φ6
LW26GS-63/04-2	M2	□64	66	72.5	42	48	48	φ10	φ4.5
LW26GS-63/04-3	M3	□88	66	72.5	52	68	68	φ13	φ6
LW26GS-125/04-3	M3	□88	84	88	52	68	68	φ13	φ6
LW26GS-160/04-3	M3	□88	88	100	52	68	68	φ13	φ6

D11-3P/4P Power off the Combination Switch

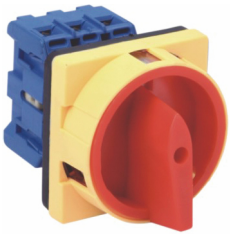

25A-32A

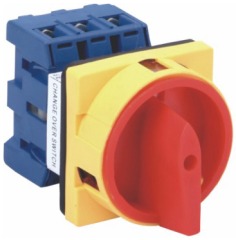

40A-63A



40A-63A



80A-100A



Attached socket

General

D11 is the product to introduce foreign advanced technology development with small volume , most secure and reliable performance. It's a load breaker switch that suitable for ventilation, air conditioning and water pump system, and the industrial equipment switch use for insulation and security isolation, equivalent to foreign KG20-KG100 load breaker switch.

General

1. The ambient air temperature does not exceed +40°C, the average temperature within 24 hours should be not more than +35°C.
2. The ambient air temperature is not lower than -5°C.
3. Installation site altitude does not exceed 2000m.
4. The relative humidity of the air should be no more than 50% when the maximum temperature is +40°C and a lower temperature allows a higher relative humidity, for example, when temperature is 20°C the relative humidity reaches 90%.When occasional condensation occurs due to temperature change, special measures should be taken.

Type designation

D11 - □ / □ □ □ □ □ □ □

- Box body types
- Installation
- Ground terminal
- Neutral terminal
- Additional contacts
- Pole
- Rated thermal current
- Combination switch

Features

1. Security

   Insulation distance of the switch contact point is large, to achieve 13-14mm, exceeds the safety requirements VDE0113 in many cases, and the safety level of this switch exceeds that of various existing circuit breakers in the world.

2. Flexible installation type

   Switches can be applied as panel type, you can also apply bottom mount, and the base mounting type can be easily and securely with screws or 35mm rail mounting. Switching system has strong flexibility and adaptability to add additional contacts and neutral terminals, You can not remove the switch that can increase the adaptability of additional contacts easily.

3. Easy installation

   The built-in screw prevents manual slipping and facilitates the best performance of pneumatic or electric tools, ensuring safety and speed of installation.

D11-3P/4P Power off the Combination Switch

Fixed pore size

Switch	Type	Pole	A	B	Cam	D_1	D_2	F	G	H	L
D11-25 D11-32	ON-OFF	3P	64	48	4	4	22	42	-	54	62
	ON-OFF	4P	64	48	4	4	22	56	-	54	62
	ON-OFF	3P+N	64	48	4	4	22	56	-	54	62
	ON-OFF	3P+N+E	64	48	4	4	22	69	-	54	62
	ON-OFF	6P	64	48	4	4	22	-	84	54	62
D11-40 D11-63	ON-OFF	3P	64	48	4	4	22	50	-	64	67
	ON-OFF	4P	64	48	4	4	22	66	-	64	67
	ON-OFF	3P+N	64	48	4	4	22	66	-	64	67
	ON-OFF	3P+N+E	64	48	4	4	22	82	-	64	67
	ON-OFF	6P	64	48	4	4	22	-	100	64	67
D11-80 D11-100	ON-OFF	3P	64	48	4	5.5	22	70	-	80	82
	ON-OFF	4P	64	48	4	5.5	22	92	-	80	82
	ON-OFF	3P+N+E	64	48	4	5.5	22	104	-	80	82
	ON-OFF	6P	88	68	4	5.5	22	-	140	80	82

E

Technical data

Use categories / Control current and power / Switch model	IEC/BS/VDE Rated standard values					
	Rated thermal current Ith	Resistive load AC21	AC23 Accidental switching motors or high inductive loads		Direct link to start the motor	
			3×220 ~240V	3×380 ~440V	3×220 ~240V	3×380 ~440V
D11-25	25A	25A	4kW	7.5kW	3kW	5.5kW
D11-32	32A	32A	5.5kW	11kW	4kW	7.5kW
D11-40	40A	40A	7.5kW	15kW	7.5kW	11kW
D11-63	63A	63A	11kW	22kW	11kW	12.5kW
D11-80	80A	80A	18.5kW	30kW	15kW	22kW
D11-100	100A	100A	22kW	37kW	18.5kW	30kW

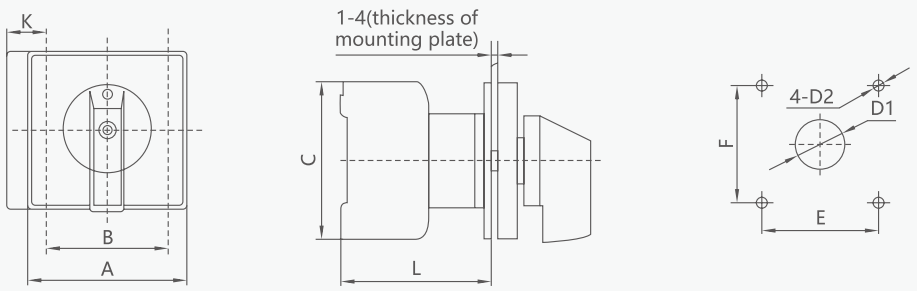

Model specification	Dimensions(mm)					Mounting dimensions(mm)			
	A	B	C	K	L	E	F	D1	D2
D11-25	□64	42	54	13.5	61	48	48	φ20	φ4.2
D11-32	□64	42	54	13.5	61	48	48	φ20	φ4.2
D11-40	□64	50	64	16	67	48	48	φ20	φ4.2
D11-63	□64	50	64	16	67	48	48	φ20	φ4.2
D11-80	□64	70	80	22.5	82	48	48	φ20	φ4.2
D11-100	□64	70	80	22.5	82	48	48	φ20	φ4.2

LW26,LW28,YCD12 Sealed Type Power Cut off Switch



16A-20A



25A-32A

Technical data

Model specification	Dimensions(mm)				Mounting dimensions(mm)	
	P	N	M	C	A1	A2
YCD12-16A	100	80	65	35	60	90
YCD12-20A	100	80	65	35	60	90
YCD12-25A	125	100	85	35	60	115
YCD12-32A	125	100	85	35	60	115
YCD12-40A	175	114	100	35	60	165
YCD12-63A	175	114	100	35	60	165
YCD12-100A	240	160	120	45	142	193

Surface Mounting

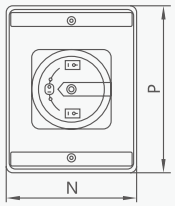

Hole Size

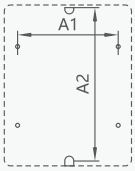





Technical data

Model specification	Dimensions(mm)					Mounting dimensions(mm)				
	A	B1	B2	C1	C2	D1	D2	D3	E	F
LW28-20	□68.5	35.5	32.5	6.5		φ18		φ5	44	
LW28-20	□68.5	45	32.5	6.5		φ18		φ5	44	
LW28-25	□68.5	35.5	32.5	6.5		φ18		φ5	44	
LW28-25	□68.5	45	32.5	6.5		φ18		φ5	44	
LW28-32	□113	70.5	35.5	18	23.5	φ27	φ21	φ5	78	
LW28-32	□113	100.5	35.5	18	23.5	φ27	φ21	φ5	78	
LW28-63	□133	70.5	35.5	18	23.5	φ27	φ21	φ5	78	
LW28-63	□133	100.5	35.5	18	23.5	φ27	φ21	φ5	78	
LW28-125	□148	92	45	22	25	φ30	φ21	φ5	107	48
LW28-125	□148	152	45	22	25	φ30	φ21	φ5	107	48
LW28-160	□148	92	45	22	25	φ30	φ21	φ5	107	48
LW28-160	□148	152	45	22	25	φ30	φ21	φ5	107	48

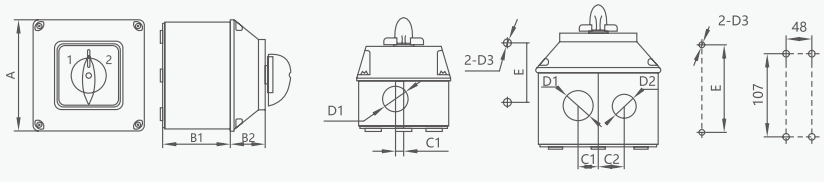

E

LW26,LW28,YCD12 Sealed Type Power Cut off Switch

Wiring diagram of LW28,EP,CS-68, LW28 with shell

2 positions 0-1 1P



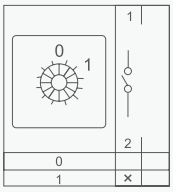

2 positions 0-1 2P



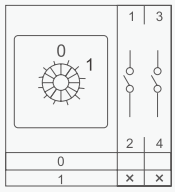

2 positions 0-1 3P



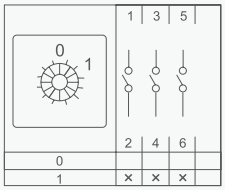

2 positions 0-1 4P



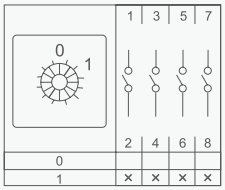

3 positions 1-0-2 1P



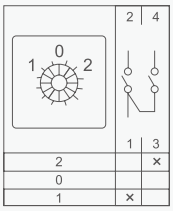

3 positions 1-0-2 2P



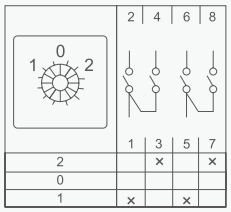

3 positions 1-0-2 3P



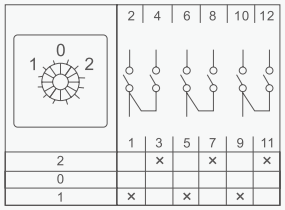

3 positions 1-0-2 4P



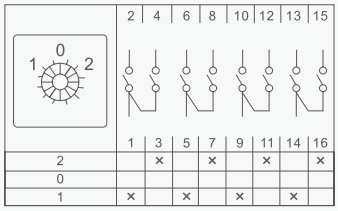

7 positions Voltmeter 3P



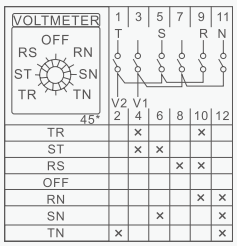

4 positions Ammeter 3P



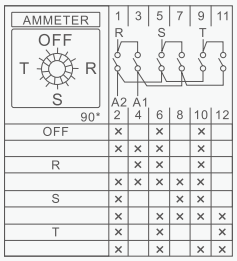

3 positions star delta 4P



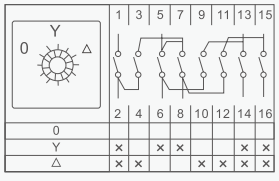

8 positions Ammeter 4P



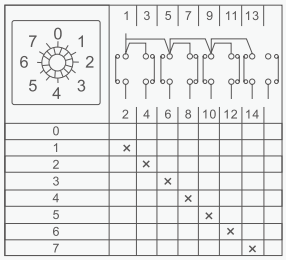

E

LW26,LW28,YCD12 Sealed Type Power Cut off Switch

Wiring diagram of LW28GS ,LW28GS with shell

LW28GS 2 positions OFF ON 4P



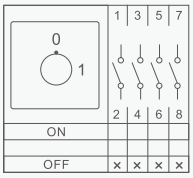

LW28GS with shell



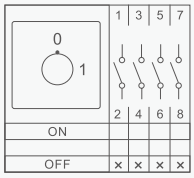

Wiring diagram of D11

2 positions OFF ON 3P



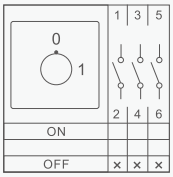

2 positions OFF ON 4P



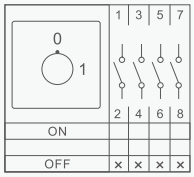

Wiring diagram of YCD12

IP65 2 positions 0-1 3P



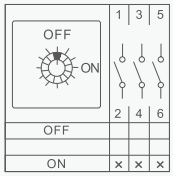

IP65 2 positions 0-1 4P



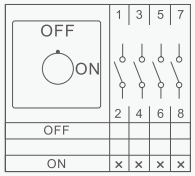

E

Warning Light

1081 Warning light Φ80

Bulb/Revolving



Outer Size

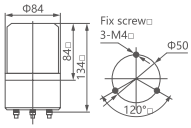

Color

Red
Yellow
Green
Blue

Model	Voltage	Light power
LTE1081 LTE1081J LTD1081 LTD1081J	DC12V DC24V AC110V AC220V	5W

1101 Warning light Φ100

Bulb/Revolving



Outer Size

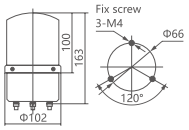

Color

Red
Yellow
Green
Blue

Model	Voltage	Light power
LTE1101 LTE1101J LTD1101 LTD1101J	DC12V DC24V AC110V AC220V	10W

1082 Warning light Φ80

Bulb/Revolving



Outer Size

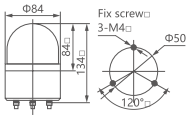

Color

Red
Yellow
Green
Blue

Model	Voltage	Light power
LTE1082 LTE1082J	DC12V DC24V AC110V AC220V	5W

5101 Warning light Φ100

LED/Strobe



Outer Size

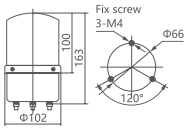

Color

Red
Yellow
Green
Blue

Model	Voltage	Light power
LTE5101 LTE5101J	DC12V DC24V AC110V AC220V	2W

1083 Warning light Φ80

Bulb/Revolving



Outer Size

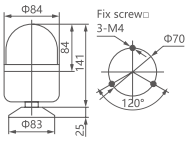

Color

Red
Yellow
Green
Blue

Model	Voltage	Light power
LTE1083	DC12V DC24V AC110V AC220V	5W

1102 Warning light Φ100

Bulb/Revolving



Outer Size

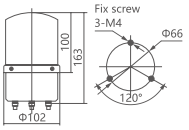

Color

Red
Yellow
Green
Blue

Model	Voltage	Light power
LTE1102 LTE1102J	DC12V DC24V AC110V AC220V	10W

5102 Warning light Φ100

LED/Strobe



Outer Size

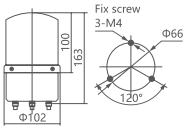

Color

Red
Yellow
Green
Blue

Model	Voltage	Light power
LTE5102 LTE5102J	DC12V DC24V AC110V AC220V	2W

Warning Light

1103 Warning light Φ100

Bulb/Revolving



Outer Size

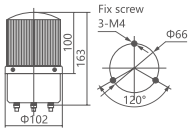

Color

Red
Yellow
Green
Blue

Model	Voltage	Light power
LTE1103	DC12V DC24V AC110V AC220V	10W
LTE1103J		

1105 Warning light Φ100

Bulb/Revolving



Outer Size

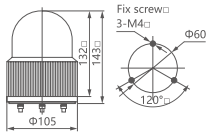

Color

Red
Yellow
Green
Blue

Model	Voltage	Light power
LTE1105	DC12V DC24V AC110V AC220V	5W
LTE1105J		

5103 Warning light Φ100

LED/Strobe



Outer Size

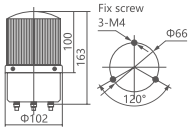

Color

Red
Yellow
Green
Blue

Model	Voltage	Light power
LTE5103	DC12V DC24V AC110V AC220V	2W
LTE5103J		

1122 Warning light Φ120

Bulb/Revolving



Outer Size

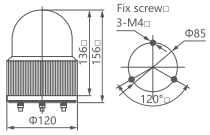

Color

Red
Yellow
Green
Blue

Model	Voltage	Light power
LTE1122	DC12V DC24V AC110V AC220V	10W
LTE1122J		

1104 Warning light Φ100

Bulb/Revolving



Outer Size

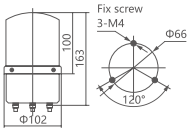

Color

Red
Yellow
Green
Blue

Model	Voltage	Light power
LTE1104	DC12V DC24V AC110V AC220V	10W
LTE1104J		

1121 Warning light Φ120

Bulb/Revolving



Outer Size

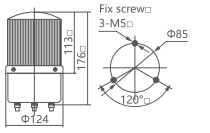

Color

Red
Yellow
Green
Blue

Model	Voltage	Light power
LTE1121 LTE1121J LTD1121 LTD1121J	DC12V DC24V AC110V AC220V	10W

5104 Warning light Φ100

LED/Strobe



Outer Size

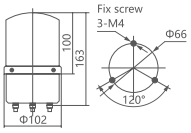

Color

Red
Yellow
Green
Blue

Model	Voltage	Light power
LTE5104	DC12V DC24V AC110V AC220V	2W
LTE5104J		

1121 Warning light Φ120

Bulb/Revolving



Outer Size

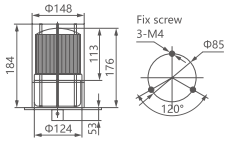

Color

Red
Yellow
Green
Blue

Model	Voltage	Light power
LTG1121S	DC12V DC24V AC110V AC220V	10W

E

Warning Light

5121 Warning light Φ120

LED/Strobe

Outer Size

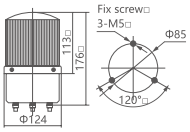

Color

Red
Yellow
Green
Blue



Model	Voltage	Light power
LTE5121	DC12V DC24V AC110V AC220V	2W
LTE5121J		

5161 Warning light Φ160

LED/Strobe

Outer Size

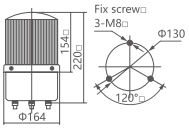

Color

Red
Yellow
Green
Blue



Model	Voltage	Light power
LTE5161	DC12V DC24V AC110V AC220V	2W
LTD5161		

1201 Warning light

Bulb/Revolving

Outer Size

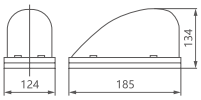

Color

Red
Yellow
Green
Blue



Model	Voltage	Light power
LTD1201	DC12V DC24V	23W

1181 Warning light Φ180

Bulb/Revolving

Outer Size

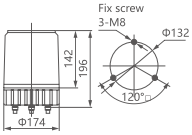

Color

Red
Yellow
Green
Blue



Model	Voltage	Light power
LTE1181	DC12V DC24V AC110V AC220V	35W
LTD1181		

1201J Warning light

Bulb/Revolving

Outer Size

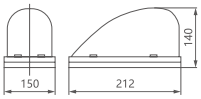

Color

Red
Yellow
Green
Blue



Model	Voltage	Light power
LTD1201J	DC12V DC24V	23W

5181 Warning light Φ180

LED/Strobe

Outer Size

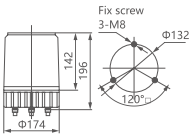

Color

Red
Yellow
Green
Blue



Model	Voltage	Light power
LTE5181	DC12V DC24V AC110V AC220V	3W
LTD5181		

1161 Warning light Φ160

Bulb/Revolving

Outer Size

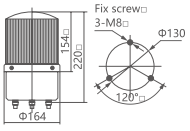

Color

Red
Yellow
Green
Blue



Model	Voltage	Light power
LTE1161	DC12V DC24V AC110V AC220V	35W
LTD1161		

5072 Flash beacon Φ70

Bulb/Flashing

Outer Size

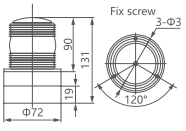

Color

Red
Yellow
Green
Blue



Model	Voltage	Light power
LTD5072	DC6V	2W

Warning Light

5088 Flash beacon Φ80

Bulb/Revolving

Outer Size

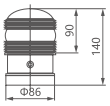

Color

Red
Yellow
Green
Blue



Model	Voltage	Light power
LTD5088	DC6V	2W

3051 Strobe beacon

LED/Flashing

Outer Size

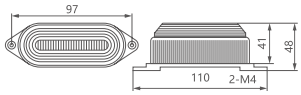

Color

Red
Yellow
Green
Blue



Model	Voltage	Light power
LED3051	DC12V DC24V AC220V	2W

2071 Flash beacon Φ70

Bulb/Revolving

Outer Size

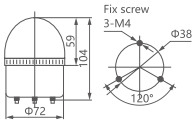

Color

Red
Yellow
Green
Blue



Model	Voltage	Light power
LTE2071	DC12V DC24V AC220V	15W
LTD2071		

3071 Strobe beacon Φ70

Xenon Strobe

Outer Size

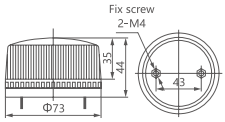

Color

Red
Yellow
Green
Blue



Model	Voltage	Light power
LTE3071	DC12V DC24V AC220V	10W

5071 Flash beacon Φ70

Bulb/Revolving

Outer Size

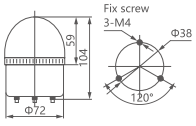

Color

Red
Yellow
Green
Blue



Model	Voltage	Light power
LTE5071	DC12V DC24V AC220V	2W
LTD5071		

3071 Strobe beacon

LED/Flashing

Outer Size

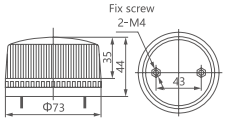

Color

Red
Yellow
Green
Blue



Model	Voltage	Light power
LED3071	DC12V DC24V AC220V	2W

3051 Strobe beacon

Xenon Strobe

Outer Size

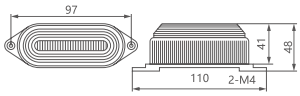

Color

Red
Yellow
Green
Blue
White



Model	Voltage	Light power
LTE3051	DC12V DC24V AC220V	10W

3072 Strobe beacon Φ80

Xenon Strobe

Outer Size

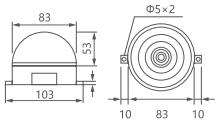

Color

Red
Yellow
Green
Blue
White



Model	Voltage	Light power
LTE3072	DC12V DC24V AC220V	10W

E

Warning Light

3072 Strobe beacon Φ80

LED/Strobe



Outer Size

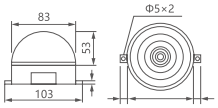

Color

Red
Yellow
Green
Blue

Model	Voltage	Light power
LED3072	DC12V DC24V AC220V	2W

204 Signal tower Φ40

Bulb Steady Burn Flashing



Outer Size

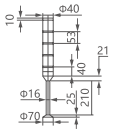

Color

Red
Yellow
Green
Blue

Model	Voltage	Light power	Function
LTA204-1	DC12V DC24V	3W	T-Steady burn W-Flash J-With buzzer
LTA204-2		6W	
LTA204-3		9W	
LTA204-4		12W	

205 Signal tower Φ52

Bulb Steady Burn Flashing



Outer Size

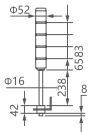

Color

Red
Yellow
Green
Blue
White

Model	Voltage	Light power	Function
LTA205-1	DC12V DC24V AC110V AC220V	5W	T-Steady burn W-Flash J-With buzzer
LTA205-2		10W	
LTA205-3		15W	
LTA205-4		20W	
LTA205-5		25W	

505 Signal tower Φ52

Bulb Steady Burn Flashing

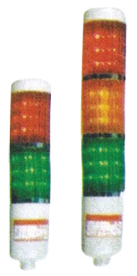

Outer Size

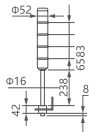

Color

Red
Yellow
Green
Blue
White

Model	Voltage	Light power	Function
LTA505-1	DC12V DC24V AC110V AC220V	2W	T-Steady burn W-Flash J-With buzzer
LTA505-2		4W	
LTA505-3		6W	
LTA505-4		8W	
LTA505-5		10W	

MS-190 Mini motor siren



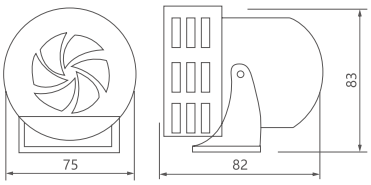

Voltage: DC12V, 24V, AC110V, 220V

MS-290 Motor siren



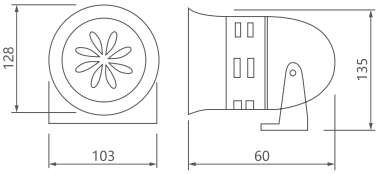

Voltage: DC12V, 24V, AC110V, 220V

MS-390 Motor siren



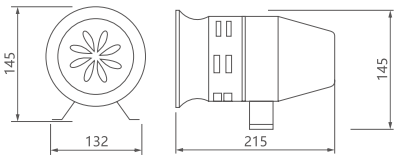

Voltage: DC12V, 24V, AC110V, 220V

HRB-P80 Buzzer

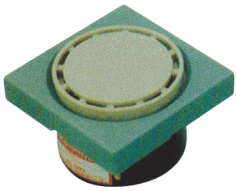

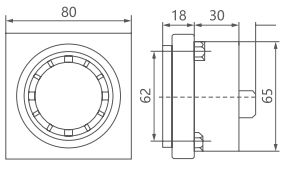

Voltage: DC12V, 24V, AC110V, 220V

Siren & Buzzer

MS-490 Double motor siren



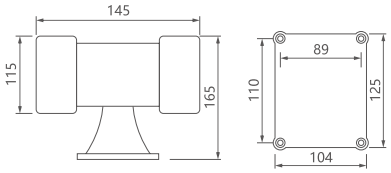

Voltage: AC110V, 230V

HRB-N80 Buzzer



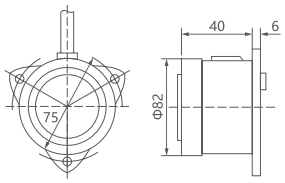

Voltage: DC12V, 24V, AC110V, 220V

BJ-1 Buzzer



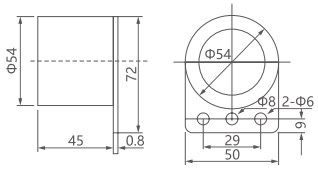

Voltage: DC6V, 12V, 24V, AC110V, 220V

HPB-PS30 Buzzer



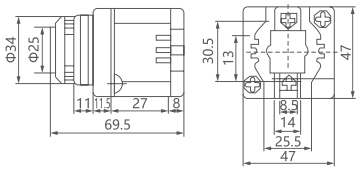

Voltage: DC12V, 24V, AC110V, 220V

WB Alarm electric bell



Model	Size	Voltage	Diz (mm)
WB-4"	4	DC6V DC12V DC24V AC110V AC120V AC130V AC220V AC230V AC240V	100
WB-6"	6		150
WB-8"	8		200
WB-10"	10		250

Uc4 Electric bell



Model	Size	Voltage	Diz (mm)
UC4-55MM	2	DC6V DC12V DC24V AC110V AC120V AC130V AC220V AC230V AC240V	Φ55
UC4-75MM	3		Φ75
UC4-100MM	4		Φ100
UC4-150MM	6		Φ150
UC4-200MM	8		Φ200
UC4-250MM	10		Φ250
UC4-300MM	12		Φ300

SCF Electric bell



Model	Size	Voltage	Diz (mm)
SCF-75MM	3	AC110V AC120V AC130V AC220V AC230V AC240V	Φ75
SCF-100MM	4		Φ100
SCF-125MM	5		Φ125
SCF-150MM	6		Φ150
SCF-200MM	8		Φ200
SCF-250MM	10		Φ250
SCF-300MM	12		Φ300

E

E