Motor Control & Protection

CJX2s Contactor



Page C02

CJX2s-M

06-16A



Page C08

CJX2s

09-630A

CJX2 Contactor



Page C20

CJX2-D

AC Contactor

(9~95A)



Page C27

CJX2-Z

AC Contactor

(09-95A)



Page C29

CJX2i

AC Contactor

(09~630A)



Page C34

YCX2s

Secondary contactor

(09-32A)



Page C37

CJX2-F

AC Contactor

(115~1250A)

Capacitor Switching Contactor



Page C41

CJ19



Page C43

CJ19i(CJ19s)



Page C47

YCC19

YCC7 Contactor



Page C51

YCC7

AC Contactor

(06-630A)

Motor Control & Protection

Other Contactors



Page C69

CKJ5
Vacuum AC Contactor
(125~630A)



Page C72

YCK
Capacitor Switching Contactor
(30-90A)

Interlocking Contactor



Page C76

CJX2s-N(CJX2i-N)
Mechanical Interlocking Contactor
(06-630A)



Page C77

CJX2-F-N
Mechanical Interlocking Contactor
(115~800A)

Thermal Relay



Page C78

JR28-12
(0.1-18A)



Page C78

JR28se
(0.1~630A)



Page C78

JR28
(0.1~630A)



Page C78

JR28s
(0.1~630A)

Starter



Page C82

LE1
Magnetic Starter
(0.1-93A)



Page C84

YCQ7
Magnetic Starter
(0.63-93A)



Page C87

YCQJ7
Motor Controller Le
(0.72~38A)



Page C91

YCQD7
Integrated Star Delta Starter
Ie(AC -3): 65-265A
Ue: 220/230V

Motor Protector



Page C98

YCP5
Motor Starter
(0.1~80A)



Page C103

YCP6
Motor Starter
(0.1~80A)

Motor Control & Protection

Variable Frequency Drive



Page C111

YCB600
Mini type
(0.4-11kW)



Page C120

YCB700
Mini Vector Inverte
(0.4-5.5kW)



Page C125

YCB1000
Normal type
(0.75~500kW)



Page C130

YCB3000
Normal type
(0.75-400kW)



Page C137

YCB2200PV
Normal type
(0.75-110kW)



Page C143

YCQR2
5.5-500kW



Page C147

YCQR7
5.5-110kW



Page C152

YCQR8
22-500kW



Page C159

YCQR8s
5.5-110kW

Other Products



Page C164

JD-5,6
1-400A



Page C166

JD-8
1-400A



Page C168

HG140
15-150W



Page C170

HGK
10-30W



Page C172

HGL
250-600W



Page C174

YCKB7
63A

CJX2s Series

AC Contactor



- More auxiliary contacts
- Suitable for larger voltage fluctuation
- Super environment adaptability

CNC
ELECTRIC

CJX2s-M AC Contactor



General

CJX2s-M series AC Contactor with novel appearance and compact structure is suitable for using starting & controlling the AC motor frequently, switching on and off the circuit at a long distance. It is used in combination with thermal relay to compose a magnetic motor starter.

Standard: IEC 60947-1, IEC 60947-4-1.

Type designation

CJX2s-M □□ □□ -/ □

- Z represents DC operation, N represents reversible AC contactor
- The types and quantities of contacts, represented by numbers (reversible contactors represent the types and quantities of contacts for a single product)
  - 10:Indicating three normally open main contacts and one normally open auxiliary contact
  - 01: Indicating three normally open main contacts and one normally closed auxiliary contact
  - 08 :Indicating two normally open and two normally closed main contacts
  - 04:Indicating four normally open main contacts
- Rated current, expressed as the rated working current value of 400 (380)V and AC-3 (6A,9A,12A,16A)
- DesIgn Serial Number

Features

1. Rated operation current(Ie): 6-16A;
2. Rated operation voltage(Ue): 220V~690V;
3. Rated insulation voltage: 690V;
4. Poles: 3P, 4P;
5. Installation: Din rail and screw installation

Operating Conditions

1. Installation category: III
2. Pollution level: 3
3. Certification: CE, CB, CCC, TUV
4. Protection degree: Ip20
5. Ambient temperature: limit of temperature: -35°C~+70°C, normal temperature: -5°C~+40°C, The average no more than +35°C within 24 hours. If not in normal operating temperature range, please refer to “Instructions for abnormal environment”
6. Altitude: ≤2000m
7. Ambient temperature: The maximum temperature of 70 degrees, the air relative humidity not exceed 50%, under lower temperature can allow for higher relative humidity. If the temperature is 20°C, the air relative humidity could up to 90%, Special measures should be taken for occasional condensation due to humidity changes.
8. Installation position: Inclination between installation surface and vertical surface should not exceed ±5°
9. Shock vibration: Products should be installed and used without significant shake, shock and vibration place.

CJX2s-M AC Contactor

Techniacal data

CJX2s Specifications						
Type			CJX2s-M06	CJX2s-M09	CJX2s-M12	CJX2s-M16
Main circuit characteristic						
Poles			3P, 4P			
Rated insulation voltage(Ui)		V	690			
Rated operating voltage(Ue)		V	380/400, 660/690			
Rated thermal current(Ith), AC-1			20	20	20	20
Rated operation current(Ie)	AC-3,380/400V	A	6	9	12	16
	AC-3,660/690V	A	3.8	4.9	4.9	4.9
	AC-4,380/400V	A	6	9	9	12
	AC-4,660/690V	A	3.8	4.9	4.9	4.9
Rated operational power(Pe)	AC-3,380/400V	kW	2.2	4	5.5	7.5
	AC-3,660/690V	kW	3	4	4	4
Mechanical life		10000 times	1200			
Electrical life	AC-3		12			
	AC-4		See electrical life curve			
Frequency of operation	AC-3	times/hour	1200			
	AC-4		300			
Connecting capability of main circuit terminal						
Flexible wire	wire	mm²	1…4			
No terminal	2 wire	mm²	1…4			
Flexible wire	1 wire	mm²	1…4			
With terminals	2 wire	mm²	1…2.5			
Hard wire	1 wire	mm²	1…4			
No terminal	2 wire	mm²	1…4			
Fastening torque		N·m	1.2			
Coil						
Rated control voltage(Us)	50Hz	V	24, 36, 48, 110, 127, 220, 380, 415			
	50/60Hz	V	24, 36, 48, 110, 127, 220, 380, 415			
	DC	V	12, 24, 36, 48, 110, 127, 220			
Allowed control circuit voltage(Us)	Operation	V	Installation inclination angle ±22.5°: 85%~110%Us; Installation inclination angle±5°: 70%~120%			
	Release(AC)	V	Installation inclination angle ±22.5°: 20%~75%Us; Installation inclination angle±5°: 20%~60%			
	Release(DC)	V	Installation inclination angle ±22.5°: 10%~75%Us; Installation inclination angle±5°: 10%~60%			
Power consumption of coil	Actuation	VA	20-40			
	Keep	VA	9.5			
	Consumption	W	1-3			
Auxiliary contacts						
Auxiliary contacts specification		A	1NO+1NC			
Rated thermal current (Ith)		A	10			
Rated operating voltage (Ue)	AC	V	380/400			
	DC	V	220			
Rated control capacit	AC-15	VA	Ue/Ie: AC380V/400V/1.5A Ith: 10A			
	DC-13	W	Ue/Ie: DC220V/0.3A			
Certification			CCC, CE, TUV, CB			

C

CJX2s-M AC Contactor

Overall and mounting dimensions(mm)

Installation and overall dimensions of CJX2s-M06~M16 series AC contactor

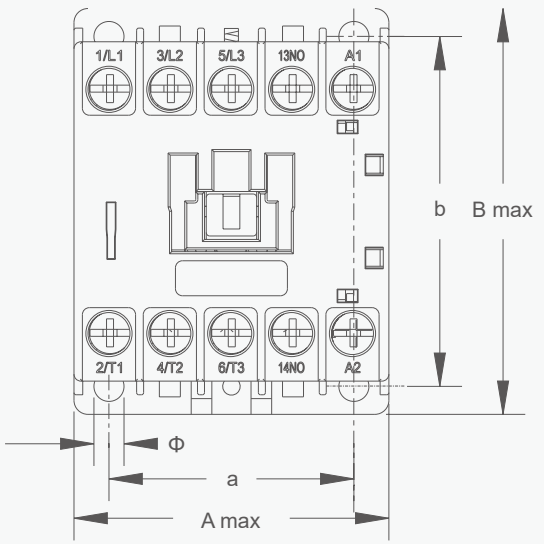

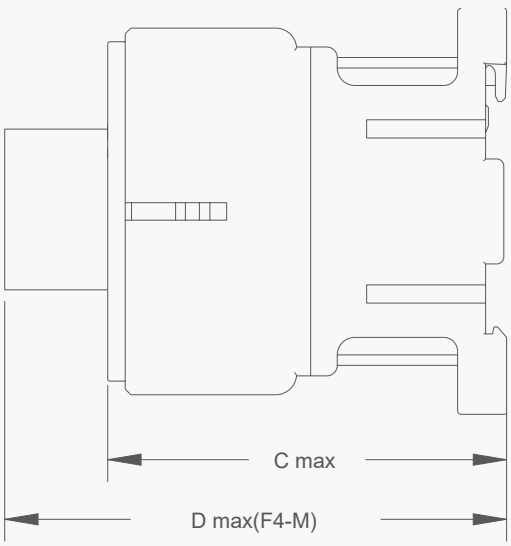

Type	Amax	Bmax	Cmax	Dmax	a	b	Φ
CJX2s-M06-M16	45.5	59	58	94	35±0.35	50±0.48	4.2
CJX2s-M06/Z-M16/Z	45.5	59	70	106	35±0.35	50±0.48	4.2

Installation and overall dimensions of CJX2s-M06/N~M16/N series AC contactor

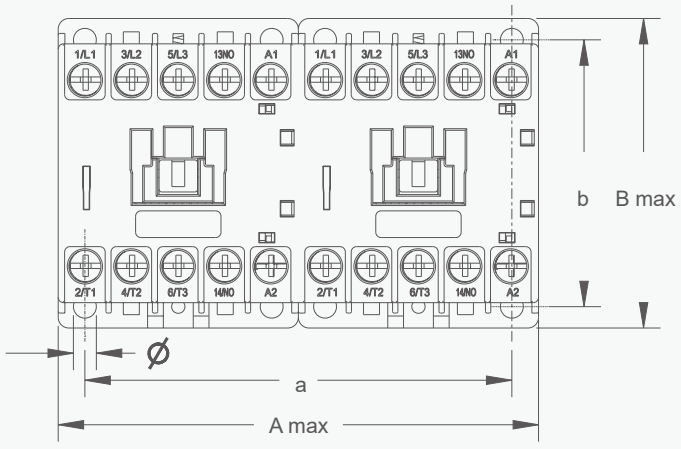

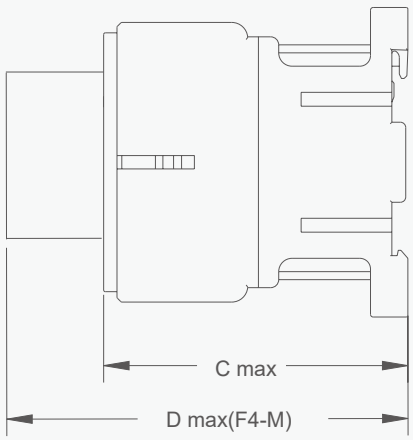

Type	Amax	Bmax	Cmax	Dmax	a	b	Φ
CJX2s-M06-M16	91	59	58	94	80±0.35	50±0.48	4.2
CJX2s-M06/Z-M16/Z	91	59	70	106	35±0.35	50±0.48	4.2

CJX2s-M AC Contactor

F4-M Auxiliary contact group

Type	Product	Configuration of contacts	
		Number of N/O contact	Number of N/C contact
F4-M20 F4-M11 F4-M02		2 1 0	0 1 2
F4-M40 F4-M31 F4-M22 F4-M13 F4-M04	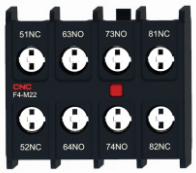	4 3 2 1 0	0 1 2 3 4

C

FS-M Surge suppression module

Model of Surge Suppression Module	Product	Control Voltage
FS-M		AC/DC:24V-48V AC/DC:380V-440V AC/DC:110V-240V

Derived Products When The Contactor is Assembled With Following Accessory Module

Derived products	Contactor	Accessorial modular	Picture
Reversing Contactor			
Auxiliary Contact			

CJX2s-M AC Contactor

Derived products	Contactor	Accessorial modular	Picture
Dust Cover		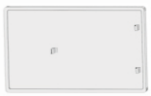	
Electromagnetic Starter			

CJX2s-M AC Contactor selection table

Motor power kW		Maximum operation current A	Number of contacts contained in the contactor body		Contactor model
380V/400V	660V/690V	(AC-3 380V/400V)	NO	OFF	
2.2	3	6	1	0	CJX2s-M0610
2.2	3	6	0	1	CJX2s-M0601
2.2	3	6	4	0	CJX2s-M0604
2.2	3	6	2	2	CJX2s-M0608
4	4	9	1	0	CJX2s-M0910
4	4	9	0	1	CJX2s-M0901
4	4	9	4	0	CJX2s-M0904
4	4	9	2	2	CJX2s-M0908
5.5	4	12	1	0	CJX2s-M1210
5.5	4	12	0	1	CJX2s-M1201
5.5	4	12	4	0	CJX2s-M1204
5.5	4	12	2	2	CJX2s-M1208
7.5	4	16	1	0	CJX2s-M1610
7.5	4	16	0	1	CJX2s-M1601
7.5	4	16	4	0	CJX2s-M1604
7.5	4	16	2	2	CJX2s-M1608

CJX2s-M AC Contactor

CJX2s-M AC Contactor Coil voltage specification table

AC(V) 50Hz	24	36	48	110	127	220	380	415
AC(V) 60Hz	24	36	48	110	127	220	380	415
AC(V) 50/60Hz	24	36	48	110	127	220	380	415
DC(V)	12	24	38	48	110	127	220	-

Instructions for use of correction factors in high altitude areas

Altitude (m)	2000	3000	4000
Rated impulse withstand voltage correction factor	1	0.88	0.78
Rated operation current correction factor	1	0.92	0.90

Instructions for use under abnormal ambient temperature

Ambient temperature (°C)	55	60	65	70
Correction factor	1	0.93	0.875	0.75

CJX2s AC Contactor

Overview

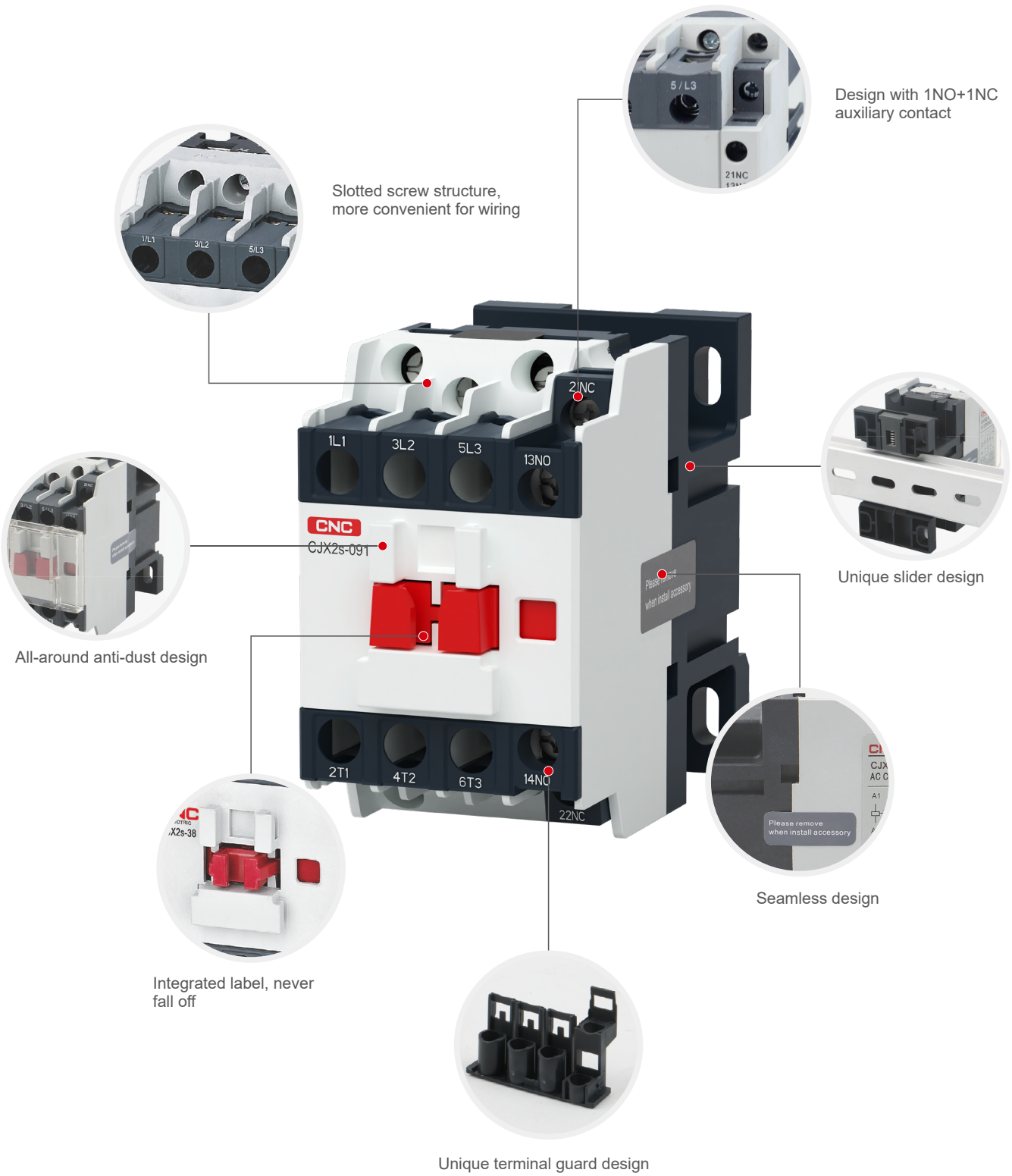

CJX2s AC Contactor





General

CJX2s series AC Contactor with artistic appearance and compact structure is suitable for using starting & controlling the AC motor frequently, switching on and off the circuit at a long distance. It is used in combination with thermal relay to compose a magnetic motor starter.

- Rated operation current(Ie): 6-630A
- Rated operation voltage(Ue): 220V~690V
- Rated insulation voltage: CJX2s-M06-CJX2s-110A 690V CJX2s-120-630A 1000V
- Poles: CJX2s-M06-16A 3P,4P;CJX2s-09-630A 3P;CJX2s-09-95A 4P
- Auxiliary contacts: 1NO+1NC;
- Installation: Din rail and screw installation
- Standard: IEC 60947-1, IEC 60947-4-1

C

Type designation

CJX2s-M □□ □□ - / □

Product name	Rated current	Breaking capacity		Breaking capacity
CJX2s-M	□□	□□	-/	□
DesIgn Serial Number	Rated current, expressed as the rated working current value of 400 (380)V and AC-3 (6A,9A,12A,16A)	The types and quantities of contacts, represented by numbers (reversible contactors represent the types and quantities of contacts for a single product) 10:Indicating three normally open main contacts and one normally open auxiliary contact 01: Indicating three normally open main contacts and one normally closed auxiliary contact 08 :Indicating two normally open and two normally closed main contacts 04:Indicating four normally open main contacts		Z represents DC operation, N represents reversible AC contactor

Operating conditions

Type	Operating and Installation Conditions
Installation category	III
Pollution level	3
Protection degree	CJX2s-M06-16A:IP20,CJX2s-09~38: IP20; CJX2s-40~95: CJX2s-110 IP10,CJX2s-120-630 IP10
Ambient temperature	limit of temperature: -35°C~+70°C, normal temperature: -5°C~+40°C, The average no more than +35°C within 24 hours.
Altitude	≤2000m
Ambient temperature	The maximum temperature is 70 degrees, the relative humidity of the air does not exceed 50%, and the temperature below 50% can allow higher relative humidity. If the temperature is 20°C, the air relative humidity could up to 90%, Special measures should be taken for occasional condensation due to humidity changes.
Installation position	Inclination between installation surface and vertical surface should not exceed ±5°
Shock vibration	Products should be installed and used without significant shake, shock and vibration.

CJX2s AC Contactor

C

Technical data

Type			CJX2s-09	CJX2s-12	CJX2s-18	CJX2s-25	CJX2s-32	CJX2s-38	CJX2s-40	CJX2s-50	CJX2s-65	CJX2s-80	CJX2s-95	CJX2s-110
Main circuit characteristic														
Poles			3P											
Rated insulation voltage(Ui)		V	690											
Rated operating voltage(Ue)		V	380/400, 660/690											
Rated thermal current(Ith),AC-1			20	20	32	40	50	50	50	60	80	125	125	140
Rated operation current(Ie)	AC-3,380/400V	A	9	12	18	25	32	38	40	50	65	80	95	110
	AC-3,660/690V	A	6.6	8.9	12	18	22	22	34	39	42	49	49	86
	AC-4,380/400V	A	3.5	5	7.7	8.5	12	14	18.5	24	28	37	44	51
	AC-4,660/690V	A	1.5	2	3.8	4.4	7.5	8.9	9	12	14	17.3	21.3	25
Rated operational power(Pe)	AC-3,380/400V	kW	4	5.5	7.5	11	15	18.5	18.5	22	30	37	45	55
	AC-3,660/690V	kW	5.5	7.5	10	15	18.5	18.5	30	33	37	45	45	80
	AC-4,380/400V	kW	1.5	2.2	3.3	4	5.4	5.5	7.5	11	15	18.5	22	25.5
	AC-4,660/690V	kW	1.1	1.5	3	3.7	5.5	6	7.5	10	11	15	18.5	21.7
Mechanical life		10000 times	1200			1000			900			650		
Electrical life	AC-3		110					90				65		
	AC-4		22				22		17			11		
Frequency of operation	AC-3	times/ hour	1200				600							
	AC-4		300				300							
Connecting capability of main circuit terminal														
Flexible wire	1 wire	mm^2	1…4			1.5…6			2.5…25			4…50		
No terminal	2 wire	mm^2	1…4			1.5…6			2.5…16			4…25		
Flexible wire	1 wire	mm^2	1…4			1…6			2.5…25			4…50		
With terminals	2 wire	mm^2	1…2.5			1…4			2.5…10			4…16		
Hard wire	1 wire	mm^2	1…4			1.5…6	1.5…10		2.5…25			4…50		
No terminal	2 wire	mm^2	1…4			1.5…			2.5…10			4…25		
Fastening torque		N·m	1.2			1.8			5			9		
Coil														
Rated control voltage(Us)	50Hz	V	24 , 36 , 48 , 110 , 127 , 220/230 , 240 , 380/400 , 415 , 440											
	50/60Hz	V	24 , 36 , 48 , 110 , 127 , 220/230 , 240 , 380/400 , 415 , 440											
Allowed control circuit voltage(Us)	Operation	V	Installation inclination angle ±22.5°: 85%~110%Us; Installation inclination angle±5°: 70%~120%											
	Release	V	Installation inclination angle ±22.5°: 20%~75%Us; Installation inclination angle±5°: 20%~65%											
Power consumption of coil	Model	VA	CJX2s-09 YCC7-09	CJX2s-12 YCC7-12	CJX2s-18 YCC7-18	CJX2s-25 YCC7-25	CJX2s-32 YCC7-32	CJX2s-38 YCC7-38	CJX2s-40 YCC7-40	CJX2s-50 YCC7-50	CJX2s-65 YCC7-65	CJX2s-80 YCC7-80	CJX2s-95 YCC7-95	CJX2s-110 YCC7-110
	Start	VA	60			70			200			200		
	Maintain	W	≤9.0			≤14			≤25			≤29		
Auxiliary contacts														
Auxiliary contacts specification		A	11											
Rated thermal current (Ith)		A	10											
Rated operating voltage (Ue)	AC	V	380											
	DC	V	220											
Rated control capacity	AC-15	VA	360											
	DC-13	W	33											
Certification			CE, TUV, CB											

Overall and mounting dimensions

CJX2s-09~38

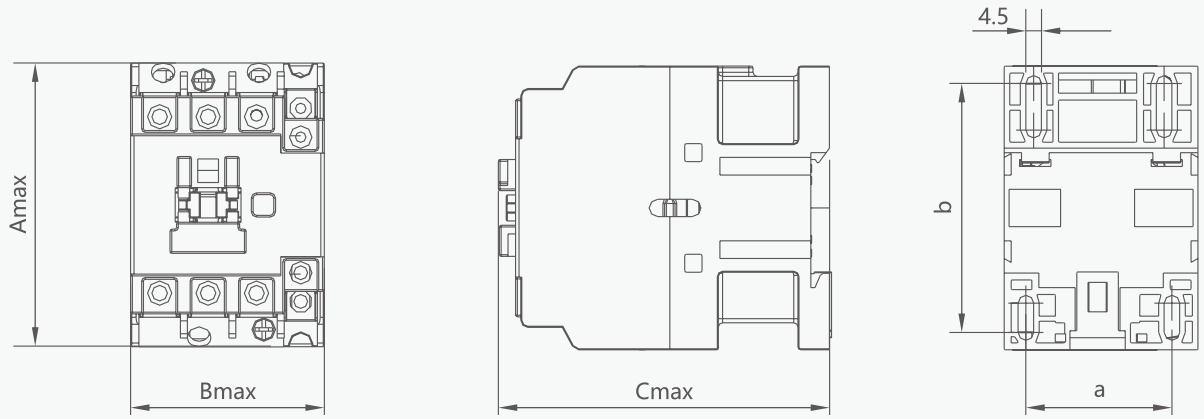

CJX2s-40~95

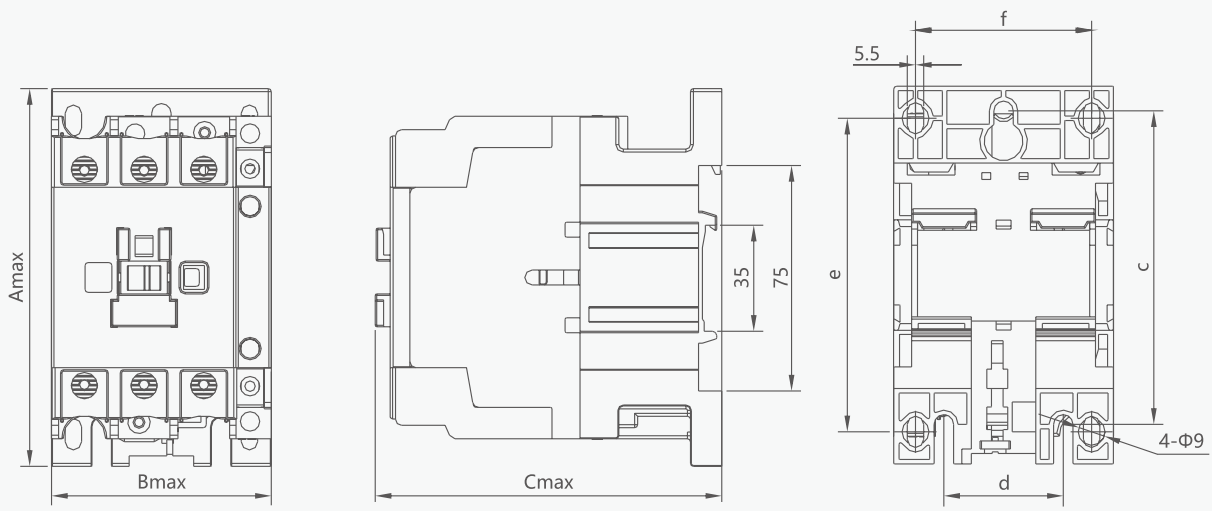

CJX2s AC Contactor

CJX2s-110

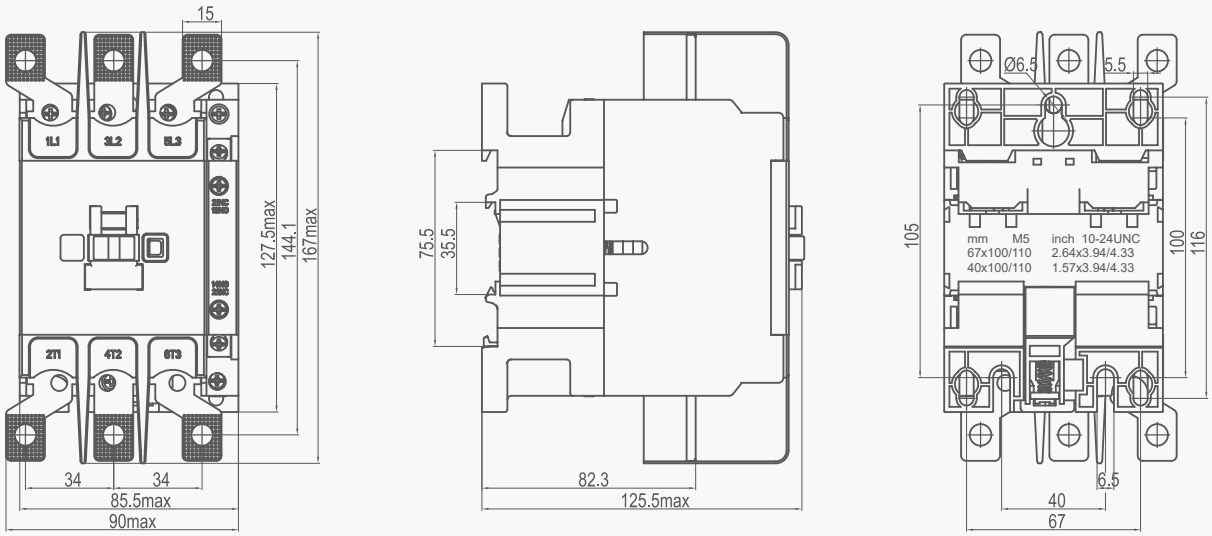

Type	Amax	Bmax	Cmax	a	b	c	d	e	f
CJX2s-09,12,18	74.5	45.5	85.5	35	50/60	-	-	-	-
CJX2s-25,32,38	86	56.5	97	40	50/70	-	-	-	-
CJX2s-40,50,65	127.5	74.5	117	-	-	105	40	100/110	59
CJX2s-80,95	127.5	85.5	125.5	-	-	105	40	100/110	67
CJX2s-110	167	90	125.5	-	-	-	-	-	-
CJX2s-09,12,18(004/008)	76	47	83	36	49.5/61.5	-	-	6	-
CJX2s-25,32,38(004/008)	83	58	95	40	46.5/74.5	-	-	-	-
CJX2s-40,50,65(004)	127.5	85.5	123	-	-	105	40	100/116	67
CJX2s-40,50,65(008)	127.5	85.5	124	-	-	105	40	100/116	67
CJX2s-80,95(004)	129	98	127	-	-	107.5	40.5	101/115	68
CJX2s-80,95(008)	129	98	137	-	-	107.5	40.5	101/115	68

CJX2s AC Contactor

F4-DN, LA2-D, LA3-D Contact Block

Type	Product	Configuration of contacts	
		Number of N/O contact	Number of N/C contact
F4-DN20 F4-DN11 F4-DN02		2 1 0	0 1 2
F4-DN40 F4-DN31 F4-DN22 F4-DN13 F4-DN04		4 3 2 1 0	0 1 2 3 4
Type		Time-delay range	Number of time-delay contacts
LA2-DT0 LA2-DT2 LA2-DT4		0.1s~3s 0.1s~30s 10s~180s	NO+NC NO+NC NO+NC
LA3-DR0 LA3-DR2 LA3-DR4		0.1s~3s 0.1s~30s 10s~180s	NO+NC NO+NC NO+NC

LX1S Coil

Type	Product	Coil voltage Us(V) / Frequency (Hz)	24	36	42	48	110	127	220	230	240	380	400	415	440	600
LX1S-D2 09-18 LX1S-D4 25-38 LX1S-D6 40-65 LX1S-D8 80-95		AC 50Hz AC 60Hz AC 50/60Hz	B6	C6	D6	E6	F6	G6	M6	P6	U6	Q6	V6	N6	R6	X6
LX1S-D2 09-18 LX1S-D4 25-38 LX1S-D6 40-65 LX1S-D8 80-95	Wide voltage	AC 50/60Hz DC	AC/DC 100–240V (Pick-up: 90%–105%, Drop-out: 20%–85%)													

CJX2s AC Contactor

Derived Products When The Contactor is Assembled With Following Accessory Module

Derived products	Contactor	Accessory module	Picture
Time-delay Contactor			
Reversing Contactor			
Magnetic Starter			
Front Auxiliary Contact			
Side Auxiliary Contact			
Changeover Capacitor AC Contactor			
Dust Cover			

CJX2s AC Contactor



Large Current

General

CJX2s series AC Contactor with novel appearance and compact structure is suitable for using starting & controlling the AC motor frequently, switching on and off the circuit at a long distance. It is used in combination with thermal relay to compose a magnetic motor starter.

Standard: IEC 60947-1, IEC 60947-4-1.

Specifications

Rated operation current(Ie): 120-225A

Rated operation voltage(Ue): 220V~690V

Rated insulation voltage: 1000V

Poles: 3P

Installation: Screw installation

Type designation

CJX2s - 120 AC220V 50/60Hz

Product name		Rated current	Breaking capacity	Breaking capacity
CJX2s	-	120	AC220V	50/60Hz
CJX2s		120 160 185 225	48,110,127,220,230, 240,380,400,415	50,60,50/60

CJX2s AC Contactor

C

Technical data

Model			CJX2s-120	CJX2s-160	CJX2s-185	CJX2s-225
Appearance						
Frame grade			120-225			
Agreed free air heating current(A)			200	200	275	275
Rated insulation voltage(V)			1000			
Rated impulse withstand voltage(kV)			12			
Poles			3P			
Rated operating current Ie(A)	AC-1		200	200	275	275
	200V/230V	AC-3	120	160	185	225
		AC-4	120	160	160	185
	380V/400V	AC-3	120	160	185	225
		AC-4	120	160	160	185
	660V/690V	AC-3	86	107	107	118
		AC-4	86	107	107	107
Rated control power	AC-3(kW)	200V/230V	37	45	55	63
		380V/400V	55	75	90	110
		660V/690V	80	100	100	110
Electrical life (10,000 times	AC-3		120			
Electrical life (10,000 times			600			
Main contact structure			3NO			
Number of auxiliary contacts			2NO+2NC			

Control circuit		Model		CJX2s-120	CJX2s-160	CJX2s-185	CJX2s-225
Main circuit wiring	Cable connection (mm^2)	Prefabricated soft wire	1	10~150			-
			2	10~75			-
		Hard wire	1	10~150			50~240
			2	10~75			50~240
	Fastening screw size			M6	M8		M10
	Fastening torque((N·m)			10			4
Control circuit connection	Cable connection (mm^2)	Prefabricated soft wire	1	1~4			
			2	1~2.5			
		Hard wire	1	1~4			
			2	1~4			
	Fastening screw size			M3.5			
	Fastening torque((N·m)			1.2			
Operating range		Pull-in		(75%~120%)Us			(75%~120%)Us
		Release		(20%~70%)Us			(20%~70%)Us

CJX2s AC Contactor

Overall and mounting dimensions

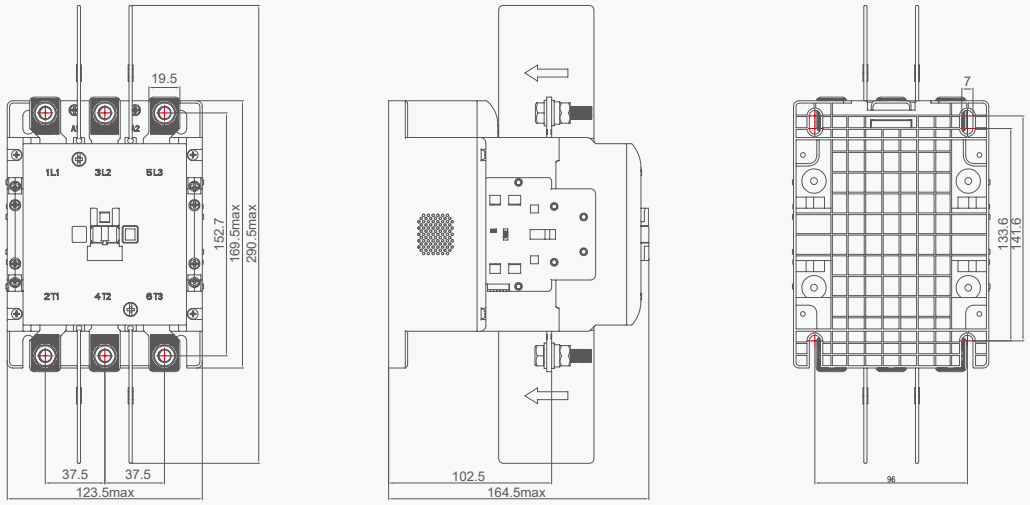

Type	Amax	Bmax	Cmax	a	b	c	d	e	f
CJX2s-120-225	169.5	123.5	164.5	96±0.5	133.6±0.8	-	-	-	-
	-	-	-	-	-	-	-	-	-
	-	-	-	-	-	-	-	-	-
	-	-	-	-	-	-	-	-	-
	-	-	-	-	-	-	-	-	-

C

CJX2s AC Contactor

C

Complete accessories

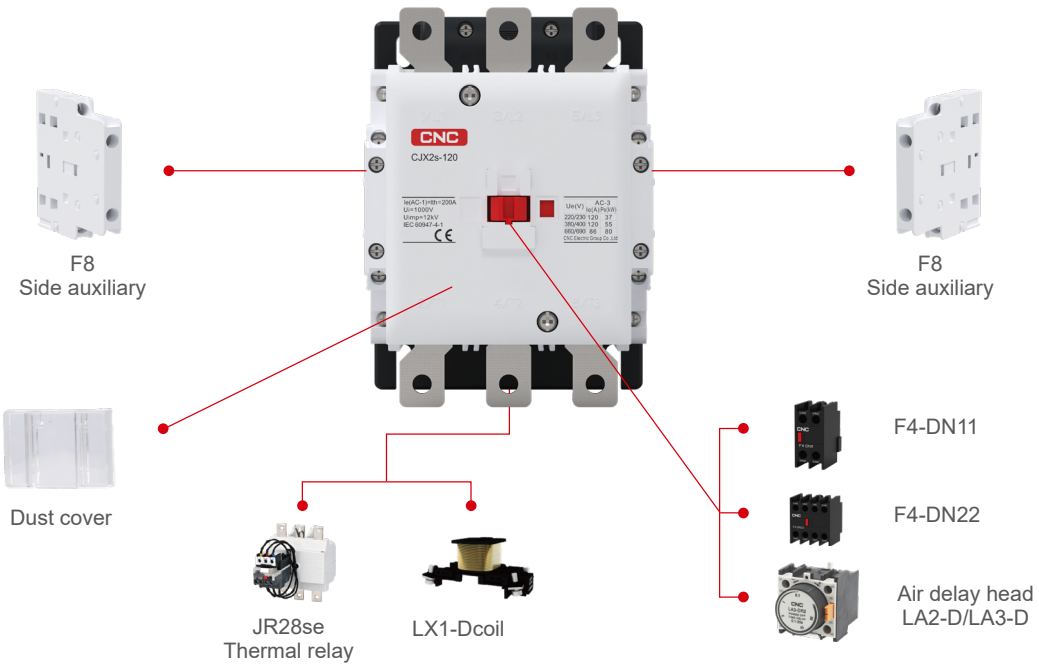

Standard two F8 Side auxiliary: To realize 2NO + 2NC auxiliary requirements, and top auxiliary can be configured as needed.

F4-DN, LA2-D, LA3-D Contact Block

Type	Product	Configuration of contacts	
		Number of N/O contact	Number of N/C contact
F4-DN20 F4-DN11 F4-DN02		2 1 0	0 1 2
F4-DN40 F4-DN31 F4-DN22 F4-DN13 F4-DN04		4 3 2 1 0	0 1 2 3 4
Type		Time-delay range	Number of time-delay contacts
LA2-DT0 LA2-DT2 LA2-DT4		0.1s~3s 0.1s~30s 10s~180s	NO+NC NO+NC NO+NC
LA3-DR0 LA3-DR2 LA3-DR4		0.1s~3s 0.1s~30s 10s~180s	NO+NC NO+NC NO+NC

CJX2s AC Contactor

Wiring diagram

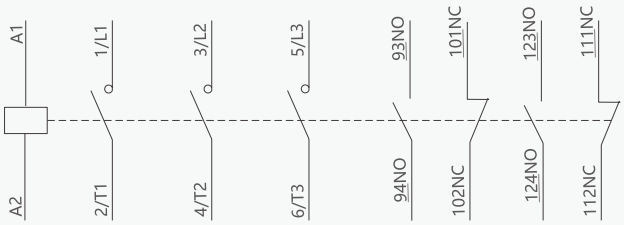

CJX2s-120-225

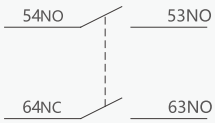

F4-DN20

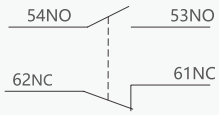

F4-DN11

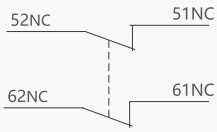

F4-DN02

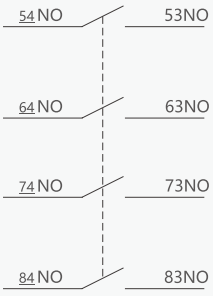

F4-DN40

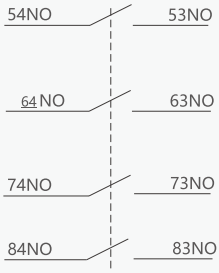

F4-DN31

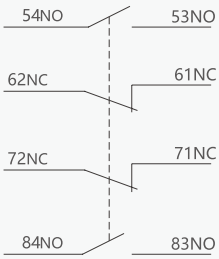

F4-DN22

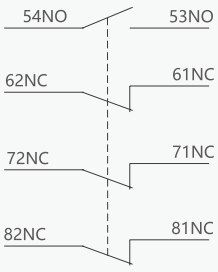

F4-DN13

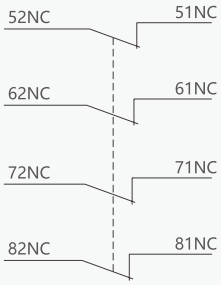

F4-DN04

C

CJX2-D AC Contactor



General

CJX2-D series AC Contactor is suitable for those circuits whose rated voltage is up to 660V AC 50Hz or 60Hz, rated current is up to 95A, for making, breaking, frequently starting & controlling the AC motor. Combined with the auxiliary contact block, timer delay & machine-interlocking device etc, it becomes the delay contactor, mechanical interlocking contactor, star-delta starter. With the thermal relay, it is combined into the electromagnetic starter.

Standard: IEC 60947-4-1.



Type designation

CJX2 - 09 004 220V

AC contactor		Rated operational current	Main contact	Coil rated voltage
CJX2	-	09	004	220V
CJX2		9A, 12A, 18A, 32A, 25A, 40A, 50A, 65A, 80A, 95A	004:4P 4NO 008:4P 2NO/2NC 10:3P+1NO 01:3P+1NC	24V, 36V, 48V, 110V, 220V, 380V



Coil voltage of contactor and code

Coil voltage Us(V)	24	36	42	48	110	220	230	240	380	400	415	440	600
50Hz	B5	C5	D5	E5	F5	M5	P5	U5	Q5	V5	N5	R5	X5
60Hz	B6	C6	D6	E6	F6	M6	P6	U6	Q6	V6	N6	R6	X6
50/60Hz	B7	C7	D7	E7	F7	M7	P7	U7	Q7	V7	N7	R7	X7

CJX2-D AC Contactor

Type	Rated current (A)	Number of main contacts Normal open (NO)	Number of auxiliary contacts	
			Normal open (NO)	Normal close (NC)
CJX2-0910	9	3NO	1	0
CJX2-0901	9	3NO	0	1
CJX2-1210	12	3NO	1	0
CJX2-1201	12	3NO	0	1
CJX2-1810	18	3NO	1	0
CJX2-1801	18	3NO	0	1
CJX2-2510	25	3NO	1	0
CJX2-2501	25	3NO	0	1
CJX2-3210	32	3NO	1	0
CJX2-3201	32	3NO	0	1
CJX2-4011	40	3NO	1	1
CJX2-5011	50	3NO	1	1
CJX2-6511	65	3NO	1	1
CJX2-8011	80	3NO	1	1
CJX2-9511	95	3NO	1	1
CJX2-09004	9	4NO	0	0
CJX2-09008	9	2NO/2NC	0	0
CJX2-12004	12	4NO	0	0
CJX2-12008	12	2NO/2NC	0	0
CJX2-25004	25	4NO	0	0
CJX2-25008	25	2NO/2NC	0	0
CJX2-40004	40	4NO	0	0
CJX2-40008	40	2NO/2NC	0	0
CJX2-50004	50	4NO	0	0
CJX2-50008	50	2NO/2NC	0	0
CJX2-65004	65	4NO	0	0
CJX2-65008	65	2NO/2NC	0	0
CJX2-80004	80	4NO	0	0
CJX2-80008	80	2NO/2NC	0	0
CJX2-95004	95	4NO	0	0
CJX2-95008	95	2NO/2NC	0	0

CJX2-D AC Contactor

Technical data

Type			CJX2-D09	CJX2-D12	CJX2-D18	CJX2-D25	CJX2-D32	CJX2-D40	CJX2-D50	CJX2-D65	CJX2-D80	CJX2-D95
Rated insulation voltage (Ui)		V	690									
Rated thermal current (Ith)		A	20	20	32	40	50	60	80	80	125	125
Rated operating current (Ie)	AC-3, 380V	A	9	12	18	25	32	40	50	65	80	95
	AC-3, 660V	A	6.6	8.9	12	18	21	34	39	42	49	55
	AC-4, 380V	A	3.5	5	7.7	8.5	12	18.5	24	28	37	41
	AC-4, 660V	A	1.5	2	3.8	4.4	7.5	9	12	14	17.3	21.3
Max. power of 3 phase motor controlled	AC-3, 220V	kW	2.2	3	4	5.5	7.5	11	15	18.5	22	25
	AC-3, 380V	kW	4	5.5	7.5	11	15	18.5	22	30	37	45
	AC-3, 660V	kW	5.5	7.5	10	15	18.5	30	33	37	45	55
Electrical life	AC-3	10000 t	100				80	80			60	
	AC-4	10000 t	20				20	15			10	
Mechanical life		10000 t	1000				800	800			600	
Operating frequency	AC-3		1200				600	600			600	
	AC-4		300				300	300			300	
Main contact structure			3 N.O., 4 N.O., 2 N.O. and 2 N.C									
Matching fuse type			RT16-20	RT16-20	RT16-32	RT16-40	RT16-50	RT16-63	RT16-80	RT16-80	RT16-100	RT16-125
Matching thermal relay type			JR28-25	JR28-25	JR28-25	JR28-25	JR28-36	JR28-93	JR28-93	JR28-93	JR28-93	JR28-93
Wiring capacity		mm²	2.5	2.5	4	4	6	25	25	25	35	35(50)
Coil												
Control power voltage (Us)												
Rated control voltage(Us)	AC	V	24, 36, 48, 110, 127, 220/230, 240, 380/400, 415, 440									
Allowed control circuit voltage(Us)	Close	V	85%~110%Us									
	Open	V	20%~75%Us(AC)									
	Close	VA	70			110		200				
	Keeping	VA	8			11		20				
	Loss powe	W	1.8~2.7			3~4		6~10				
Auxiliary contact												
Rated thermal current (Ith)		A	10									
Rated operating voltage (Ue)	AC-15	V	380									
	DC-13	V	220									
Rated control capacity	AC-15	VA	360									
	DC-13	W	33									

Note:3 pole is normal type, not remarked in the type name.

CJX2-D AC Contactor

Overall and mounting dimensions(mm)

Pic.1 CJX2-D09,12,18

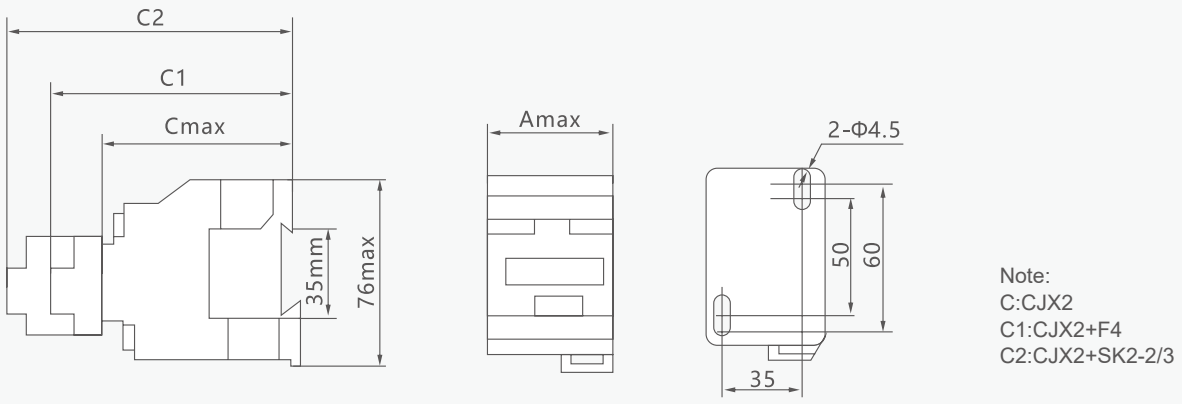

Unit: mm

Type	Amax	Cmax	C1	C2
CJX2-D09,12	47	82	115	134
CJX2-D18	47	87	120	139

Pic. 2 CJX2-D25,32

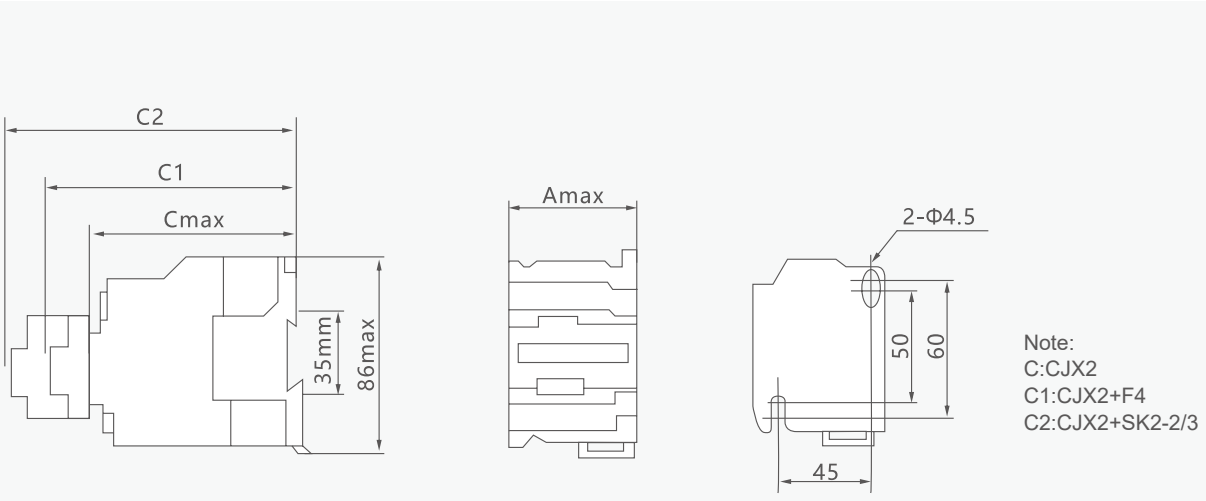

Unit: mm

Type	Amax	Cmax	C1	C2
CJX2-D25	57	95	130	149
CJX2-D32	57	100	135	154

CJX2-D AC Contactor

Pic. 3 CJX2-D40~95

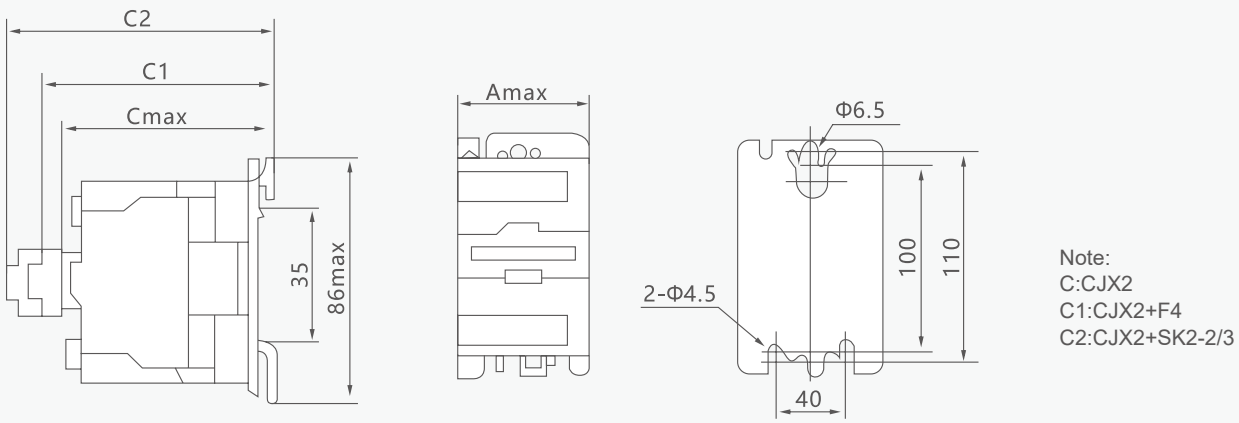

Unit: mm

Type	Amax	Cmax	C1	C2
CJX2-D40,50,65	79	116	149	168
CJX2-D80,95	87	127	160	179
CJX2-D40004,D50004,65004	84	116	149	168
CJX2-D40008,D50008,65008	84	127	149	168
CJX2-D80004,95004	96	122	160	179
CJX2-D80008,95008	96	135	160	179

Operating conditions

Item	Data
Ambient temperature	-5°C~+40°C
Altitude	≤2000m
Relative humidity	The maximum temperature is 40 degrees, and the relative humidity of the air should not exceed 50%. Higher relative humidity can be allowed at lower temperatures. If the humidity changes because of occasional gel generation, it should be eliminated.
Pollution level	3
Installation category	III
Installation position	Inclination between installation surface and vertical surface should not exceed ±5°
Installation	The installation of fastening screws can be used,the CJX2-D~38 contactor can also be installed on 35mm standard DIN rail.

CJX2-D AC Contactor

F4-DN, LA2-D, LA3-D Contact Block

Type	Product	Configuration of contacts	
		Number of N/o contact	Number of N/c contact
F4-DN20 F4-DN11 F4-DN02		2 1 0	0 1 2
F4-DN40 F4-DN31 F4-DN22 F4-DN13 F4-DN04		4 3 2 1 0	0 1 2 3 4

Type		Time-delay range	Number of time-delay contacts
LA2-DTO LA2-DT2 LA2-DT4		0.1S~3S 0.1S~30S 10S~180S	NO+NC NO+NC NO+NC
LA3-DRO LA3-DR2 LA3-DR4		0.1S~3S 0.1S~30S 10S~180S	NO+NC NO+NC NO+NC

LX1-D Coil

Type	Product	Coil voltage Us(V) / Frequency (Hz)	24	36	42	48	110	127	220	230	240	380	400	415	400	600
LX1-D2 09-18A		50Hz	B5	C5	D5	E5	F5	G5	M5	P5	U5	Q5	V5	N5	R5	X5
LX1-D4 25-32A	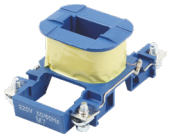	60Hz	B6	C6	D6	E6	F6	G6	M6	P6	U6	Q6	V6	N6	R6	X6
LX1-D6 40-95A		50/60Hz	B7	C7	D7	E7	F7	G7	M7	P7	U7	Q7	V7	N7	R7	X7

CJX2-D AC Contactor

Derived Products When the Contactor is Assembled with Following Accessory Module

Derived products	Contactor	Accessorial modular	Picture
Time-delay contactor			
Reversing contactor			
Magnetic starter			
Front auxiliary contact			
Side auxiliarycontact			
Changeover capacitor AC contactor			
Star-delta contactor		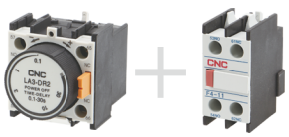	

C

CJX2-Z DC Coil AC Contactor



CJX2-09~32Z



CJX2-40~95Z

General

CJX2-Z series operational contactors are suitable for circuits with a rated voltage of 660V AC 50Hz or 60Hz and a rated current of 9-95A under an AC-3/380v load. It is used for making, disconnecting and frequently starting motors in remote control circuits. It can also be used in combination with auxiliary contact groups, air delayers, thermal relay devices, etc.

Technical data

Type			CJX2-09Z	CJX2-12Z	CJX2-18Z	CJX2-25Z	CJX2-32Z
Rated working current(A)	380VAC	AC3	9	12	18	25	32
		AC4	3.5	5	7.7	8.5	12
	660VAC	AC3	6.6	8.9	12	18	21
		AC4	1.5	2	3.8	4.4	7.5
Rated thermal current (Ith)			20	20	32	40	50
Controllable power (kW)	220/240VAC		2.2	3	4	5.5	7.5
	380/400VAC		4	5.5	7.5	11	15
	415VAC		4	5.5	9	11	15
	500VAC		5.5	7.5	10	15	18.5
	600/690VAC		5.58	7.5	10	15	18.5
Pole			3,4	3,4	3	3,4	3
Rated working voltage(VAC)			380,660	380,660	380,660	380,660	380,660
Rated insulation voltage(VAC)			660	660	660	660	660
Mechanical life×10^4			1000	1000	1000	1000	1000
Electrical life	AC×10^4		100	100	100	100	100
	AC4×10^4		20	20	20	20	20
Operating frequency	Electrical life	AC×10^4	1200	1200	1200	1200	1200
		AC4×10^4	300	300	300	300	300
	Mechanical life×10^4		3600	3600	3600	3600	3600
Rated controlled voltage(VDC)			24,110,220	24,110,220	24,110,220	24,110,220	24,110,220
Working voltage	Close	DC%	0.85~1.1Us	0.85~1.1Us	0.85~1.1Us	0.85~1.1Us	0.85~1.1Us
	Open	DC%	0.10~0.75Us	0.10~0.75Us	0.10~0.75Us	0.10~0.75Us	0.10~0.75Us

Type			CJX2-40Z	CJX2-50Z	CJX2-65Z	CJX2-80Z	CJX2-95Z
Rated working current(A)	380VAC	AC3	40	50	65	80	95
		AC4	18.5	24	28	37	44
	660VAC	AC3	34	39	42	49	55
		AC4	9	12	14	17.3	21.3
Rated thermal current (Ith)			60	80	80	125	125
Controllable power (kW)	220/240VAC		11	15	18.5	22	25
	380/400VAC		18.5	22	30	37	45
	415VAC		22	30	37	45	45
	500VAC		22	30	37	55	55
	600/690VAC		30	33	37	45	55
Pole			3,4	3,4	3,4	3,4	3,4
Rated working voltage(VAC)			380,660	380,660	380,660	380,660	380,660
Rated insulation voltage(VAC)			660	660	660	660	660
Mechanical life×10^4			800	800	800	800	800
Electrical life	AC×10^4		80	80	80	80	80
	AC4×10^4		15	15	15	15	15
Operating frequency	Electrical life	AC×10^4	600	600	600	600	600
		AC4×10^4	300	300	300	300	300
	Mechanical life×10^4		3600	3600	3600	3600	3600
Rated controlled voltage(VDC)			24,110,220	24,110,220	24,110,220	24,110,220	24,110,220
Working voltage	Close	DC%	0.85~1.1Us	0.85~1.1Us	0.85~1.1Us	0.85~1.1Us	0.85~1.1Us
	Open	DC%	0.10~0.75Us	0.10~0.75Us	0.10~0.75Us	0.10~0.75Us	0.10~0.75Us

CJX2-Z DC Coil AC Contactor

Overall and mounting dimensions

CJX2-09~32Z

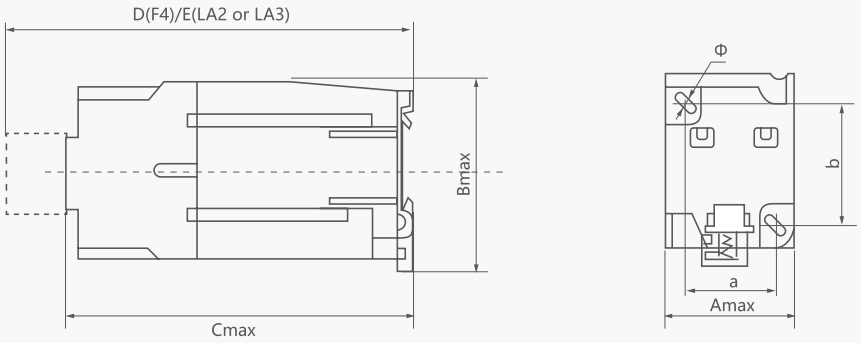

CJX2-40~95Z

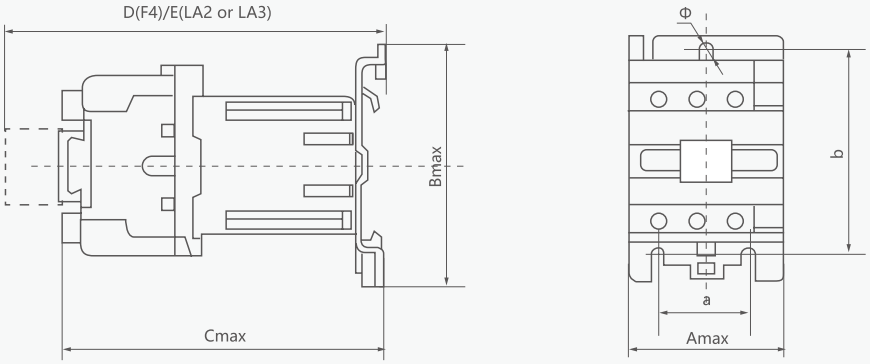

Type	Amax	Bmax	Cmax	Emax	a	b	c
CJX2-09Z~12Z	47	76	116	149	160	50/60	4.5
CJX2-18Z	47	76	120	157	177	50/60	4.5
CJX2-25Z	57	86	130	163	184	50/60	4.5
CJX2-32Z	57	86	135	168	189	50/60	4.5
CJX2-4011Z~6511Z	77	129	175	203	223	100/110	6.5
CJX2-4004Z~6504Z	85	129	174	203	223	100/110	6.5
CJX2-4008Z~6508Z	85	129	185	203	223	100/110	6.5
CJX2-8011Z~9511Z	87	129	183	212	230	100/110	6.5
CJX2-8004Z~9504Z	97	129	180	212	230	100/110	6.5
CJX2-8008Z~9504Z	97	129	191	212	230	100/110	6.5

Note: Not only for screw mounting, but also for 35mm [CJX2-09Z~95Z] and 75mm [CJX2-40Z~95Z] international standard Din-rail mounting.

CJX2i AC Contactor











General

CJX2i series AC Contactor with novel appearance and compact structure is suitable for using starting & controlling the AC motor frequently, switching on and off the circuit at a long distance. It is used in combination with thermal relay to compose a magnetic motor starter.

Certification:CE, CB, TUV.

- Rated operation current(Ie): 9-110A;
- Rated operation voltage(Ue): 220V~690V;
- Rated insulation voltage: 690V;
- Poles: 3P;
- Auxiliary contacts: 1NO+1NC;
- Installation: Din rail and screw installation
- Standard: IEC 60947-1, IEC 60947-4-1.

C

Operating conditions

Type	Operating and Installation Conditions
Installation category	III
Pollution level	3
Protection degree	CJX2i-09~38: IP20; CJX2i-40~95: CJX2i-110 IP10
Ambient temperature	limit of temperature: -35°C~+70°C, normal temperature: -5°C~+40°C, The average no more than +35°C within 24 hours.
Altitude	≤2000m
Ambient temperature	The maximum temperature is 70 degrees, the relative humidity of the air does not exceed 50%, and the temperature below 50% can allow higher relative humidity. If the temperature is 20°C, the air relative humidity could up to 90%, Special measures should be taken for occasional condensation due to humidity changes.
Installation position	Inclination between installation surface and vertical surface should not exceed ±5°
Shock vibration	Products should be installed and used without significant shake, shock and vibration.

CJX2i AC Contactor

C

Appearance																	
Type			CJX2i-09	CJX2i-12	CJX2i-18	CJX2i-25	CJX2i-32	CJX2i-38	CJX2i-40	CJX2i-50	CJX2i-65	CJX2i-80	CJX2i-95	CJX2i-110
Main circuit characteristic														
Poles			3P											
Rated insulation voltage(Ui)		V	690											
Rated operating voltage(Ue)		V	380/400, 660/690											
Rated thermal current(Ith), AC-1			20	20	32	40	50	50	60	80	80	125	125	140
Rated operation current(Ie)	AC-3,380/400V	A	9	12	18	25	32	38	40	50	65	80	95	110
	AC-3,660/690V	A	6.6	8.9	12	18	22	22	34	39	42	49	49	49
	AC-4,380/400V	A	3.5	5	7.7	8.5	12	14	18.5	24	28	37	44	44
	AC-4,660/690V	A	1.5	2	3.8	4.4	7.5	8.9	9	12	14	17.3	21.3	21.3
Rated operational power(Pe)	AC-3,380/400V	kW	4	5.5	7.5	11	15	18.5	18.5	22	30	37	45	45
	AC-3,660/690V	kW	5.5	7.5	10	15	18.5	18.5	30	33	37	45	45	45
	AC-4,380/400V	kW	1.5	2.2	3.3	4	5.4	5.5	7.5	11	15	18.5	22	22
	AC-4,660/690V	kW	1.1	1.5	3	3.7	5.5	6	7.5	10	11	15	18.5	18.5
Mechanical life		10000 times	1200			1000			900			650		
Electrical life	AC-3		110				90					65		
	AC-4		22				22		17			11		
Frequency of peration	AC-3	times/ hour	1200				600							
	AC-4		300				300							
Connecting capability of main circuit terminal														
Flexible wire	1 wire	mm²	1…4			1.5…6			2.5…25			4…50		
No terminal	2 wire	mm²	1…4			1.5…6			2.5…16			4…25		
Flexible wire	1 wire	mm²	1…4			1…6			2.5…25			4…50		
With terminals	2 wire	mm²	1…2.5			1…4			2.5…10			4…16		
Hard wire	1 wire	mm²	1…4			1.5…6	1.5…10		2.5…25			4…50		
No terminal	2 wire	mm²	1…4			1.5…			2.5…10			4…25		
Fastening torque		N·m	1.2			1.8			5			9		
Coil														
Rated control voltage(Us)	50Hz		24,36,48,110,127,220/230,240,380/400,415,440											
	50/60Hz		24,36,48,110,127,220/230,240,380/400,415,440											
Allowed control circuit voltage(Us)	Operation		Installation inclination angle ±22.5°: 85%~110%Us; Installation inclination angle±5°: 70%~120%											
	Release		Installation inclination angle ±22.5°: 20%~75%Us;Installation inclination angle±5°: 20%~65%											
Power consumption of coil	Model		CJX2s-09 YCC7-09	CJX2s-12 YCC7-12	CJX2s-18 YCC7-18	CJX2s-25 YCC7-25	CJX2s-32 YCC7-32	CJX2s-38 YCC7-38	CJX2s-40 YCC7-40	CJX2s-50 YCC7-50	CJX2s-65 YCC7-65	CJX2s-80 YCC7-80	CJX2s-95 YCC7-95	CJX2s-110 YCC7-110
	Start		60			70			200			200		
	Maintain		≤9.0			≤14			≤25			≤29		
Auxiliary contacts														
Auxiliary contacts specification		A	11											
Rated thermal current (Ith)		A	10											
Rated operating voltage (Ue)	AC	V	380											
	DC	V	220											
Rated control capacit	AC-15	VA	360											
	DC-13	W	33											
Certification			CE, TUV, CB											

Overall and mounting dimensions(mm)

CJX2i-09~38

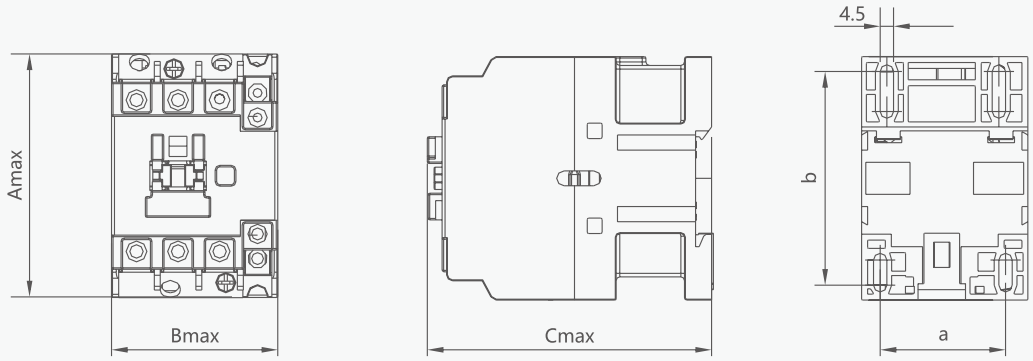

CJX2i-40~95

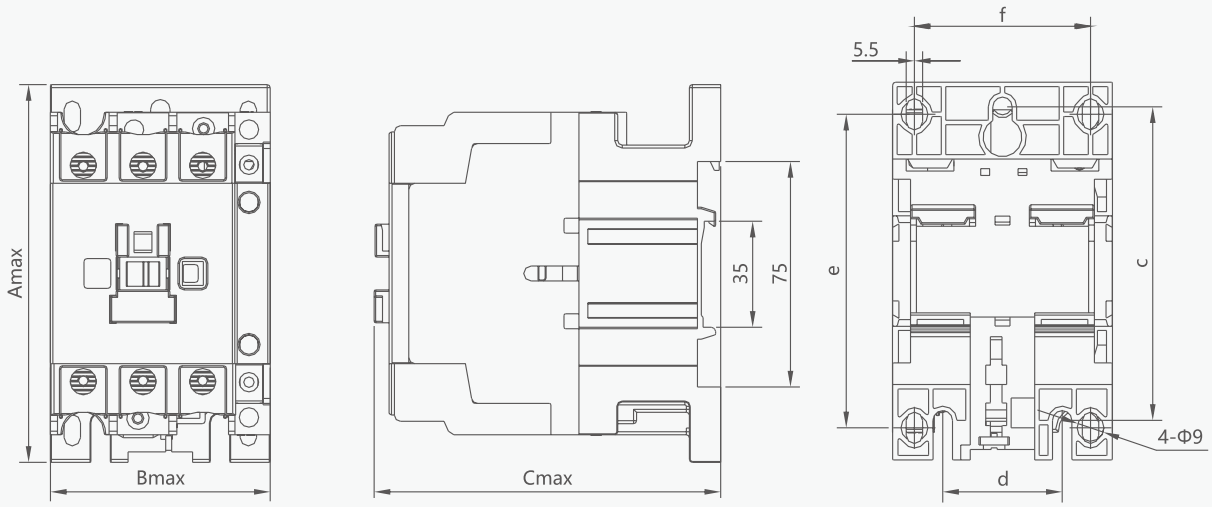

C

CJX2i AC Contactor

CJX2i-110

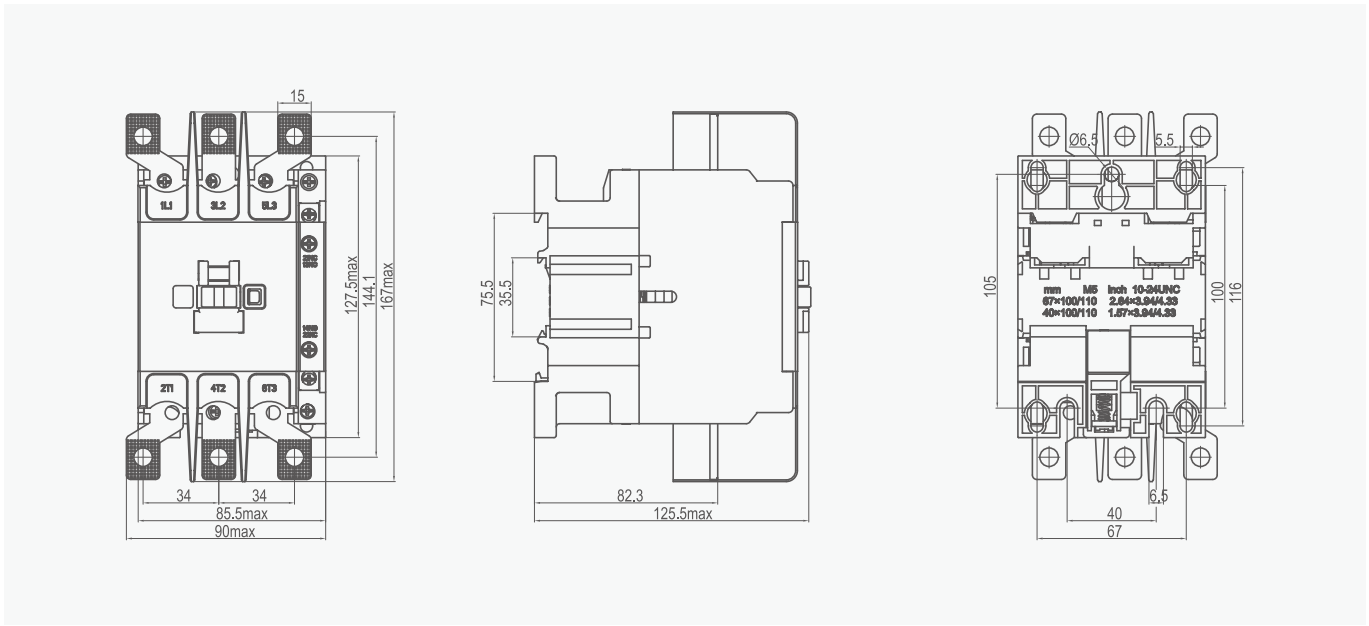

Type	Amax	Bmax	Cmax	a	b	c	d	e	f
CJX2i-09, 12, 18	74.5	45.5	85.5	35	50/60	-	-	-	-
CJX2i-25, 32, 38	83	56.5	97	40	50/70	-	-	-	-
CJX2i-40, 50, 65	127.5	74.5	117	-	-	105	40	100/110	59
CJX2i-80, 95	127.5	85.5	125.5	-	-	105	40	100/110	67
CJX2i-110	167	90	125.5	-	-	-	-	-	-

CJX2i AC Contactor

Derived Products When The Contactor is Assembled With Following Accessory Module

Derived products	Contactor	Accessorial modular	Picture
Time-delay contactor			
Reversing contactor			
Magnetic starter		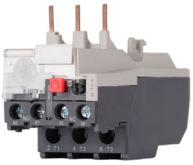	
Front auxiliary contact			
Side auxiliarycontact			
Changeover capacitor AC contactor			
dust cover			

C

YCX2s AC Contactor



General

YCX2s series AC Contactor with novel appearance and compact structure is suitable for using starting & controlling the AC motor frequently, switching on and off the circuit at a long distance. It is used in combination with thermal relay to compose a magnetic motor starter.

Standard: IEC 60947-1, IEC 60947-4-1.

- Rated operation current(Ie): 9-32A
- Rated operation voltage(Ue):220V~690V
- Rated insulation voltage: 690V
- Poles: 2P
- Installation: Din rail and screw installation

Type designation

Company	AC contactor		Rated current of the main contact	Coil voltage
YC	X2s	-	09	220V

Operating conditions

Type Operating	Conditions
Installation category	III
Pollution degree	3
Certification	CE, CB, CCC, TUV
Protection degree	YCX2s-09~32:IP20(front side)
Ambient temperature	Limit of temperature: -35°C~+70°C; Normal temperature: -5°C~+40°C; The average no more than +35°C within 24 hours; If not in normal operating temperature range, please refer to “Instructions for abnormal environment”.
Altitud	≤ 2000m
Ambient temperature	The maximum temperature of 70 degrees, the air relativehumidity not exceed 50%,under lower temperature can allowfor higher relative humidity.If the temperature is 20°C, the air relative humidity could upto 90%,Special measures should be taken for occasionalcondensation due to humidity changes.
Installation position	Inclination between installation surface and vertical surfaceshould not exceed +5°
Shock vibration	Products should be installed and used without significantshake,shock and vibration place.

YCX2s AC Contactor

Specifications

Type			YCX2s-09	YCX2s-12	YCX2s-18	YCX2s-25	YCX2s-32
Main circuit characteristic							
Poles			2P				
Rated insulation voltage(Ui)		V	690				
Rated operating voltage(Ue)		V	380/400, 660/690				
Rated thermal current(Ith),AC-1			20	20	32	40	50
Rated operation current(Ie)	AC-3,380/400V	A	9	12	18	25	32
	AC-3,660/690V	A	6.6	8.9	12	18	22
	AC-4,380/400V	A	3.5	5	7.7	8.5	12
	AC-4,660/690V	A	1.5	2	3.8	4.4	7.5
Rated operational power(Pe)	AC-3,380/400V	kW	4	5.5	7.5	11	15
	AC-3,660/690V	kW	5.5	7.5	10	15	18.5
	AC-4,380/400V	kW	1.5	2.2	3.3	4	5.4
	AC-4,660/690V	kW	1.1	1.5	3	3.7	5.5
Mechanical life		10000 times	1200			1000	
Electrical life	AC-3		110				90
	AC-4		22				22
Frequency of operation	AC-3	times/hour	1200				600
	AC-4		300				300
Connecting capability of main circuit terminal							
Flexible wire	1 wire	mm^2	1…4			1.5…6	
No terminal	2 wire	mm^2	1…4			1.5…6	
Flexible wire	1 wire	mm^2	1…4			1…6	
With terminals	2 wire	mm^2	1…2.5			1…4	
Hard wire	1 wire	mm^2	1…4			1.5…6	1.5…10
No terminal	2 wire	mm^2	1…4			1.5…	
Fastening torque		N·m	1.2			1.8	
Coil							
Rated control voltage(Us)	50Hz	V	220				
	50/60Hz	V	220				
Allowed control circuit voltage(Us)	Operation	V	Installation inclination angle ±22.5°: 85%~110%Us; Installation inclination angle±5°: 70%~120%				
	Release	V	Installation inclination angle ±22.5°: 20%~75%Us; Installation inclination angle±5°: 20%~65%				
Power consumption of coil	Actuation	VA	60			70	
	Keep	VA	6-9.5			6-9.5	
	Consumption	W	1-3			1-3	

C

YCX2s AC Contactor

C

Overall and mounting dimensions(mm)

YCX2s-09~18

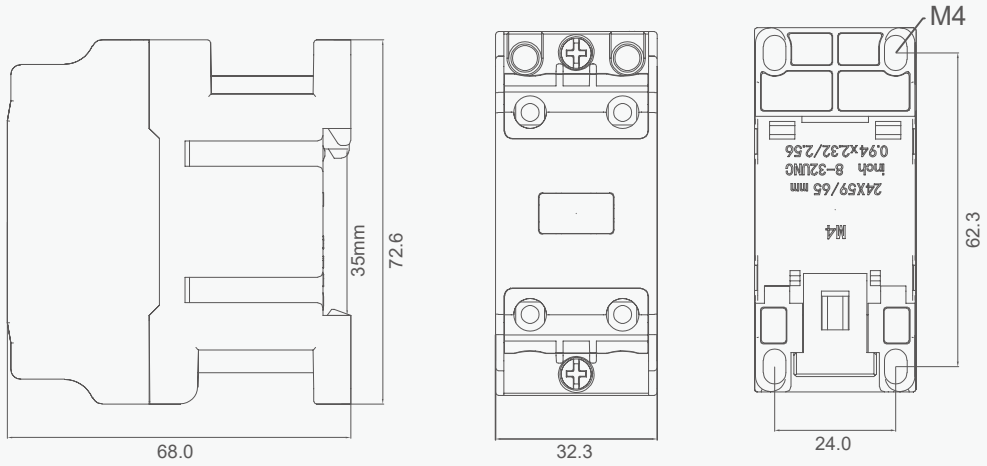

YCX2s-25~32

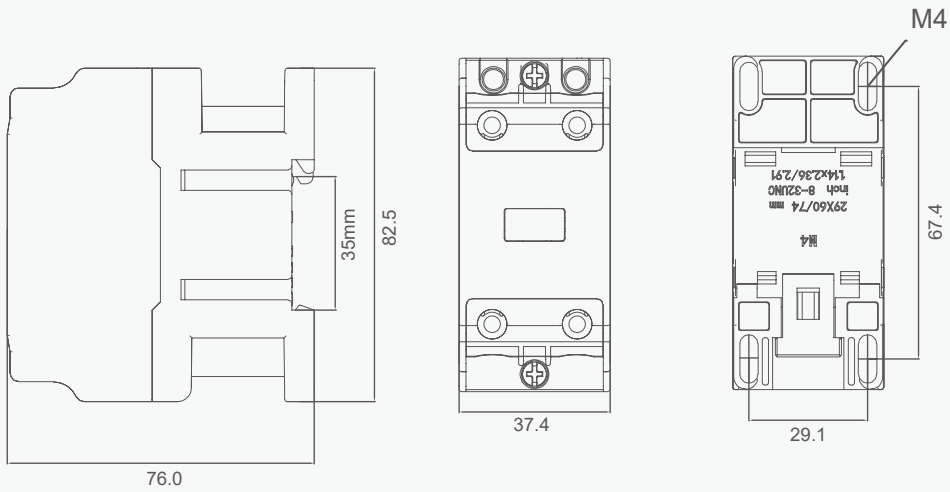

CJX2-F(CJX2-FB) AC Contactor



CJX2-F

General

CJX2-F series AC contactor is applied to circuits with AC 50Hz/60Hz, rated voltage up to 690V, rated current up to 800A. It is used for remote making & breaking circuits, and protecting circuit from overload when assembling with thermal over-load relay.

Standard: IEC 60947-4-1.

Type designation

CJX2-F □□

- Number of poles: 4P;Blank:3P
- Rated operating current(A), AC-3 380/400V
- AC contactor, 115A~800A



CJX2-FB(B:Black)

Operating conditions

1. Ambient temperature: -5°C~+40°C;
2. Air conditions: At mounting site, relative humidity not exceed 50% at the maximum temperature of +40°C. For the wettest month, the maximum relative humidity averaged shall be 90% while the lowest temperature averaged in that month is +20°C,special measures should be taken for occurrence of condensation.
3. Altitude: ≤2000m;
4. Pollution grade: 2
5. Mounting category: III;
6. Mounting conditions: inclination between the mounting plane and the vertical plane not exceed ±5°;
7. The product should be located in the places where there are no obvious impact and shake.

Technical data

Model	Rated conventional heating current(A) Ith AC-1	Rated operating current(A)		Power of controlled 3-phase cage motor(kW)		Operating cycles (times/h) AC-3	Electrical life (×104 times) AC-3	Mechanical life (×104 times)	Matcahed fuse	
		AC-3	AC-4	AC-3	AC-4				Model	Rated current A
		380/400V	660/690V	380/400V	660/690V					
CJX2-F115	200	115	86	55	80	1200	120	1000	NT1	250
CJX2-F150	200	150	108	75	100				NT1	250
CJX2-F185	275	185	118	90	110	600	100	600	NT2	315
CJX2-F225	225	225	137	110	132				NT2	315
CJX2-F265	315	265	170	132	160		80		NT3	355
CJX2-F330	380	330	235	160	200				NT3	500
CJX2-F400	450	400	303	200	250				NT3	630
CJX2-F500	630	500	353	250	335				NT4	800
CJX2-F630	800	630	426	335	450				NT4	1000
CJX2-F800	800	800(AC-3)	486(AC-3)	450	475		60	300	NT4	1000
CJX2-F800	800	630(AC-4)	462(AC-4)	335	450				NT4	1000
CJX2-F1250	1250	AC-1 No frequent operation. It is recommended to operate once a day				AC-1 120	AC-1 10	AC-1 30	NT4	1250

CJX2-F(CJX2-FB) AC Contactor

Accessories

Type designation

F4-DN □□

- Number of NC auxiliary contacts
- Number of NO auxiliary contacts
- Auxiliary contact

Table 2 Auxiliary contact

Type	Product	Configuration of contacts	
		Number of N/o contact	Number of N/c contact
F4-DN20 F4-DN11 F4-DN02		2 1 0	0 1 2
F4-DN40 F4-DN31 F4-DN22 F4-DN13 F4-DN04		4 3 2 1 0	0 1 2 3 4

Type designation

LA2-D □□

- 0: time-delay range, 0.1~3s
  2: time-delay range, 0.1~30s
  4: time-delay range, 10~180s
- T: making time-delay
  R: breaking time-delay
- Time-delay module

Table 3 Time-delay module

Type		Time-delay range	Number of time-delay contacts
LA2-DTO LA2-DT2 LA2-DT4		0.1S~3S 0.1S~30S 10S~180S	NO+NC NO+NC NO+NC
LA3-DRO LA3-DR2 LA3-DR4		0.1S~3S 0.1S~30S 10S~180S	NO+NC NO+NC NO+NC

CJX2-F(CJX2-FB) AC Contactor

Table 4 Coil

Contactor type / Coil code	Coil voltage(V)	110V AC	127V AC	220V AC	380V AC
	CJX2-F115,150	FF 110	FF 127	FF 220	FF 380
	CJX2-F185,225	FG 110	FG 127	FG 220	FG 380
	CJX2-F265	FH 110	FH 127	FH 220	FH 380
	CJX2-F330	FH 1102	FH 1272	FH 2202	FH 3802
	CJX2-F400	FJ 110	FJ 127	FJ 220	FJ 380
	CJX2-F500	FK 110	FK 127	FK 220	FK 380
	CJX2-F630	FL 110	FL 127	FL 220	FL 380
	CJX2-F800(Applicable to 800A and 1250A products)	FM 110	FM 127	FM 220	FM 380

Note: operating voltage: (85%~110%)Us; drop-out voltage: (20%~75%)Us for common products, (10%~75%)Us for common products.

C

Terminal connection

Model	The connection capability			Screw size	Tightening torque (N·m)
	Number of piece	Cable cross section (mm²)	Cu busbar cross section (mm²)		
CJX2-F115	1	70~95	-	M6	3
CJX2-F150	1	70~95	-	M8	6
CJX2-F185	1	95~150	-	M8	6
CJX2-F225	1	95~150	-	M10	10
CJX2-F265	1	120~185	-	M10	10
CJX2-F330	1	185~240	-	M10	10
CJX2-F400	1(2)	240(150)	30×5	M10	10
CJX2-F500	2	150~185	30×8	M10	10
CJX2-F630	2	185~240	40×8	M12	14
CJX2-F800	2	185~240	40×8	M12	14
CJX2-F1250	2	/	100X5	M12	14

Product features

1. The contactor is composed of arc-extinguishing system, contact system, base frame and magnetic system (including iron core,coil).
2. The contact system of the contactor is a direct acting type with double break point distribution.
3. The lower base-frame of the contactor is made of shaped aluminum alloy and the coil is of plastic enclosed structure.
4. The coil is assembled into one body with the mature coil. They can be removed or inserted directly from the contactor.
5. It is convenient for user's service and maintenance.

CJX2-F(CJX2-FB) AC Contactor

Overall and mounting dimensions

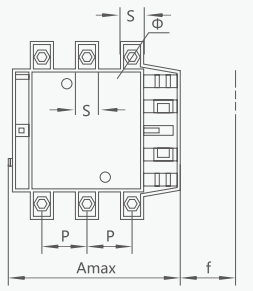

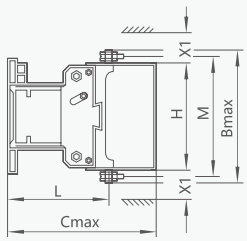

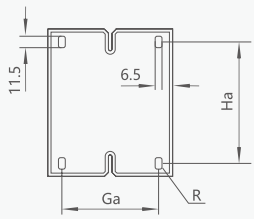

CJX2-F115~330

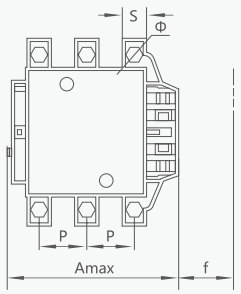

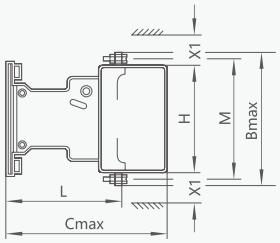

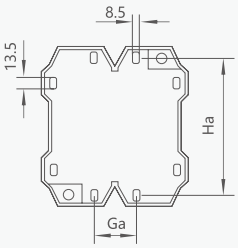

CJX2-F400~500

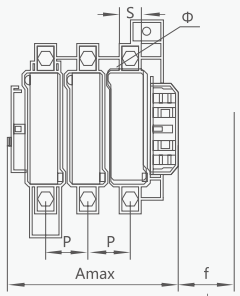

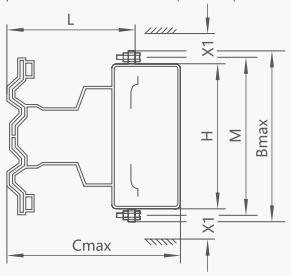

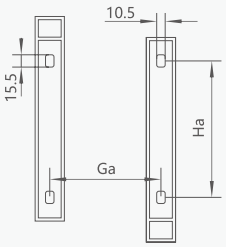

CJX2-F630~800

Model	CJX2-F115		CJX2-F150		CJX2-F185		CJX2-F225		CJX2-F265		CJX2-F330		CJX2-F400		CJX2-F500	CJX2-F630		CJX2-F800	CJX2-F1250
	3P	4P	3P	4P	3P	4P	3P	4P	3P	4P	3P	4P	3P	4P	3P	3P	4P	3P	3P
A	168	204	168	204	171	211	171	211	202	247	215	261	215	261	235	312	389	312	309
B	163	163	171	171	175	175	198	198	204	204	208	208	208	208	238	305	305	305	338
C	172	172	172	172	183	183	183	183	215	215	220	220	220	220	233	256	256	256	255
P	37	37	40	40	40	40	48	48	48	48	48	48	48	48	55	80	80	80	80
S	20	20	20	20	20	20	25	25	25	25	25	25	25	25	30	40	40	40	50
Φ	M6	M6	M8	M8	M8	M8	M10	M10	M10	M10	M10	M10	M10	M10	M10	M12	M12	M12	M12
f	131	131	131	131	131	131	131	131	147	147	147	147	146	146	150	181	181	181	201
M	147	147	150	150	154	154	172	172	178	178	181	181	181	181	208	264	264	264	264
H	124	124	124	124	127	127	127	127	147	147	158	158	158	158	172	202	202	202	202
L	107	107	107	107	113.5	113.5	113.5	113.5	141	141	145	145	145	145	146	155	155	155	155
X1 200~500V	10		10		10		10		10		10		15		15	20		20	20
X1 660~1000V	15		15		15		15		15		15		20		20	30		30	30
Ga	80		80		80		80		96		96		80		80	180	240	180	180
Ha	110~120		110~120		110~120		110~120		110~120		110~120		170~180		170~180	180~190		180~190	180-190

Note: a. f is the min distance needed to mount and dismount the coil.
b. X1: arcing distance is identified by operating voltage and breaking capacity.

CJ19 Contactor for Capacitor Switching



General

CJ19 series AC Contactor is suitable for those circuits whose rated voltage is up to 400V AC 50Hz or 60Hz.CJ19 is used to combine with low voltage reactive power compensators or cut off low voltage shunt capacitor. CJ19 series AC Contactor has restraining device to effectively decrease impact caused by inrush transient current when switch on or over voltage when switch off.

Type designation

CJ 19 - □ / □□

- Stands for the quantity of auxiliary contact (normal open)
- Stands for the quantity of auxiliary contact (normal close)
- Basic specification code means with AC-6b,the rated working current based on utilization category's rated voltage which is 380V.
- Design sequence number
- AC Contactor

Note:Acquiesce in 3 pairs of N/O main auxiliary contacts and 3 pairs of N/O precharge auxiliary contacts

Technical data

Type / Item		CJ19-25	CJ19-32	CJ19-43	CJ19-63	CJ19-95	CJ19-115
Controllable capacitor capacity (kvar)	230V	6	9	10	15	22.5	35
	400V	12	18	20	30	45	60
Rated insulation voltage (V)		500					
Rated operating voltage (V)		380					
Conventional thermal current (A)		25	32	43	63	95	115
AC-6b rated working current (A)		17	23	29	43	72	87
Restrained surge capacity/Capacitor rated current		20Ie					
Controlled power voltage (V)		48, 110, 127, 220, 380					
Conventional thermal current of auxiliary contacts (A)		6			10		
Operating frequency (cycles/h)		120					
Electrical life (×10^5 time)		1					
Mechanical life (×10^5 time)		10					

CJ19 Contactor for Capacitor Switching

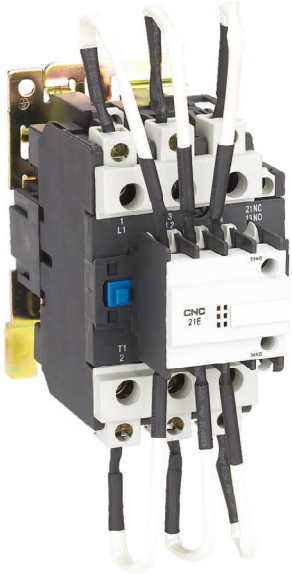

Overall and mounting dimensions

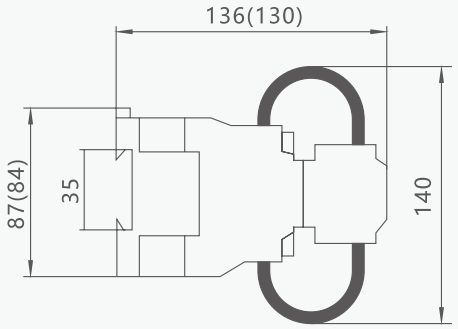

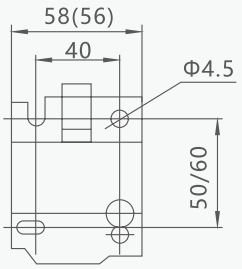

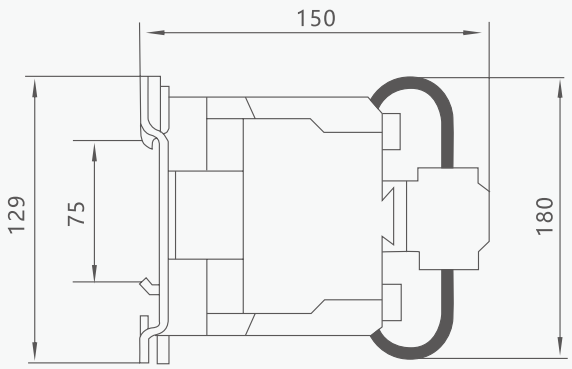

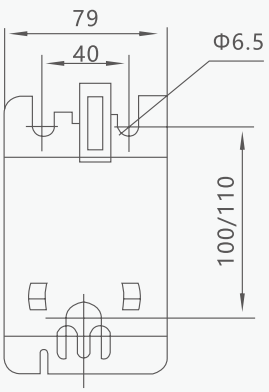

CJ19i(CJ19s) Contactor

Overview

Opening design

It's convenient for customers to tighten and loosen screws at any time.





Unique slider design

- Turn tedious into simplicity, improve installation and disassembly efficiency.
- Realize tool-free installation and disassembly.
- The original tedious disassembly becomes very simply.





Fire resistance shell

High temperature resistance, corrosion resistance, safety and security.



Dust prevention

Add dust proof sticker, easy to deal with dusty environment, intimate care.



Integrated signage, hard to fall off.

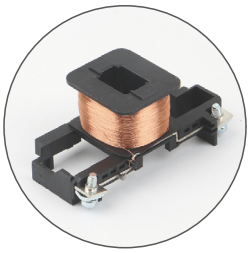

Pure copper coils

Automatic wingding, enamelled wire above QA-180

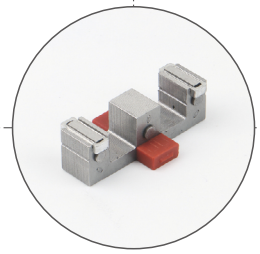

Customized silicon steel sheet

DW600, big iron core, actuate more smoothly.

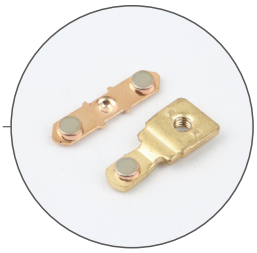

Silver alloy contact

Stronger electrical conductivity, more sensitive, not easy to oxidize.

CJ19i(CJ19s) Contactor



General

CJ19i contactor for capacitor switching (hereinafter called contactor) is suitable for the circuit of AC 50Hz/60Hz with rated rated voltage up to 690V. It is mainly used to add low voltage reactive power compensation equipment or cut off low voltage parallel capacitor. The contactor is equipped with a device to suppress the inrush current, which can effectively reduce the impact of the making inrush current on the capacitor and suppress the over-voltage when the capacitor is cut off.

Standard: IEC/EN 60947-4-1.

Type designation

CJ 19 i - □□ / □□

- Number of auxiliary contact 21: 2NO+1NC, 12:1NO+2NC
- Basic model code
- Shell color selection i:black shell, s: gray white shell
- Contactor for capacitor switching
- Company

Operating conditions

- Ambient temperature:-5°C~+40°C, the average during 24 hours should not exceed +35°C;
- Altitude:≤2000m;
- Atmosphere conditions: At mounting site, relative humidity not exceed 50% at the max temperature of +40°C, higher relative humidity is allowable under lower temperature. For example, RH could be 90% at +20°C, special measures should be taken to occurrence of condensation;
- Pollution degree: 3
- Installation category: III
- Installation conditions: the inclination between installation plane and vertical plane is within ±5°
- Impact and shake: the products should locate in the places where there are no obvious impact and shake.

CJ19i(CJ19s) Contactor

Technical data

Model			CJ19i-25 CJ19s-25	CJ19i-32 CJ19s-32	CJ19i-43 CJ19s-43	CJ19i-63 CJ19s-63	CJ19i-95 CJ19s-95	CJ19i-115 CJ19s-115
Main circuit features								
Rated operating voltage(Ue)		V	380/400					
Rated isolation voltage(Ui)		V	690					
Rated current of controllable capacitor(In)	AC-6b 400V	A	17	29	36	43	72	87
Rated capacity of controllable capacitor(Qn)	AC-6b 230V	kVar	6	9	10	15	22.5	35
	AC-6b 400V	kVar	12	18	20	30	45	60
Rated conventional heating current(Ith)		A	25	32	43	63	95	115
Restrained surge capacity		A	≤35In			≤55In		
Mechanical durability		10^4 times	100					
Electrical durability	AC-6b 400V	10^4 times	15				12	
Operating frequency cycles/h	AC-6b 400V	times/h	300				120	
Coil features								
Controlled power voltage (Us)	AC50Hz	V	110, 220, 380					
Operating voltage range	operation voltage	V	85%~110%Us when install inclination angle is +22.5°; 70%~120%Us when install inclination angle is ±5°;					
	release voltage	V	20%~75%Us when install inclination angle is +22.5°; 20%~65%Us when install inclination angle is ±5°;					
Auxiliary contact features								
Number of auxiliary contact			12,21					
Rated conventional heating current(Ith)		A	10					
The minimum load can be connected to			6V×10mA					

C

CJ19i(CJ19s) Contactor

Overall and mounting dimensions

CJ19i(CJ19s)-25, 32, 43

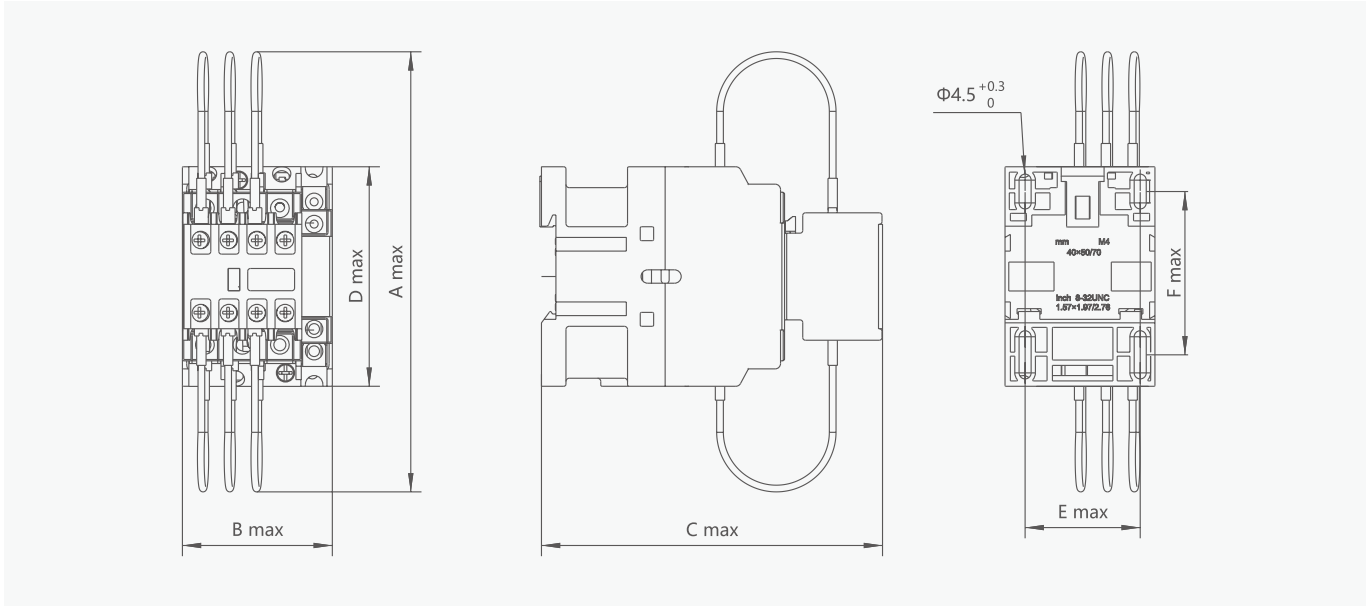

CJ19i(CJ19s)-25, 32, 43

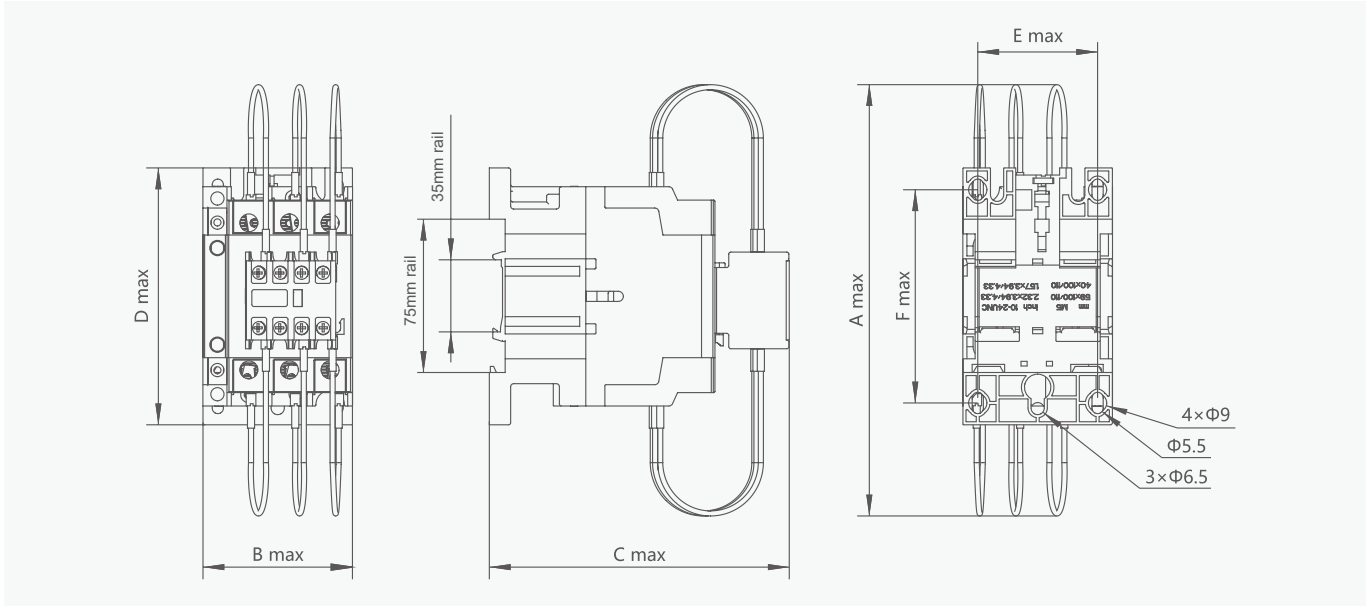

Model	Overall dimensions				Mounting dimensions	
	Amax	Bmax	Cmax	Dmax	Emax	Fmax
CJ19i(CJ19s)-25	176	45.5	122	74.5	35	50/60
CJ19i(CJ19s)-32	180	56.5	132	83	40	50/60
CJ19i(CJ19s)-43	180	56.5	132	83	40	50/60
CJ19i(CJ19s)-63	190	74.5	154	127.5	59	100/110
CJ19i(CJ19s)-95	190	85.5	160	127.5	67	100/110
CJ19i(CJ19s)-115	190	85.5	160	127.5	67	100/110

YCC19 Contactor for Capacitor Switching

Overview



Opening design

It's convenient for customers to tighten and loosen screws at any time.



Unique slider design

- Turn tedious into simplicity, improve installation and disassembly efficiency.
- Realize tool-free installation and disassembly.
- The original tedious disassembly becomes very simply.

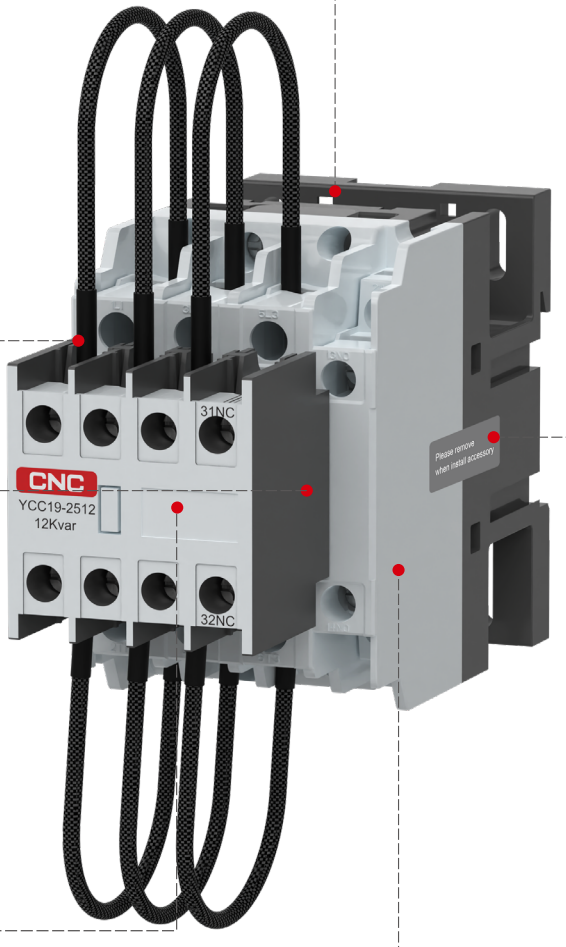



Fire resistance shell

High temperature resistance, corrosion resistance, safety and security.



Dust prevention

Add dust proof sticker, easy to deal with dusty environment, intimate care.



Integrated signage, hard to fall off.

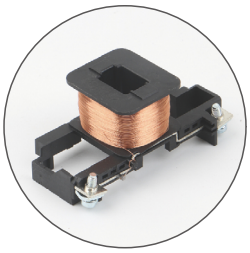

Pure copper coils

Automatic wingding, enamelled wire above QA-180

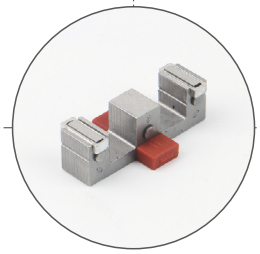

Customized silicon steel sheet

DW600, big iron core, actuate more smoothly.

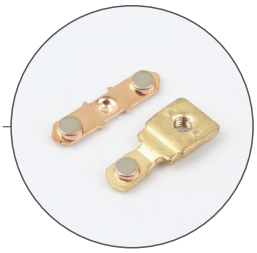

Silver alloy contact

Stronger electrical conductivity, more sensitive, not easy to oxidize.

YCC19 Contactor for Capacitor Switching



General

YCC19 contactor for capacitor switching (hereinafter called contactor) is suitable for the circuit of AC 50Hz/60Hz with rated voltage up to 690V. It is mainly used to add low voltage reactive power compensation equipment or cut off low voltage parallel capacitor. The contactor is equipped with a device to suppress the inrush current, which can effectively reduce the impact of the making inrush current on the capacitor and suppress the over-voltage when the capacitor is cut off.

Standard: IEC/EN 60947-4-1.

Type designation

YC C 19 - □□ □□

- Number of auxiliary contact
  21: 2NO+1NC, 12:1NO+2NC
- Basic model code
- Design sequence No.
- Contactor for capacitor switching
- Company

Operating conditions

- Ambient temperature:-5°C~+40°C, the average during 24 hours should not exceed +35°C;
- Altitude:≤2000m;
- Atmosphere conditions: At mounting site, relative humidity not exceed 50% at the max temperature of +40°C, higher relative humidity is allowable under lower temperature. For example, RH could be 90% at +20°C, special measures should be taken for occurrence of condensation;
- Pollution degree: 3
- Installation category: III
- Installation conditions: the inclination between installation plane and vertical plane is within ±5°
- Impact and shake: the products should locate in the places where there are no obvious impact and shake.

YCC19 Contactor for Capacitor Switching

Technical data

Model			YCC19-25	YCC19-32	YCC19-43	YCC19-63	YCC19-95	YCC19-115
Main circuit features								
Rated operating voltage(Ue)		V	380/400					
Rated isolation voltage(Ui)		V	690					
Rated current of controllable capacitor(In)	AC-6b 400V	A	17	29	36	43	72	87
Rated capacity of controllable capacitor(Qn)	AC-6b 230V	kVar	6	9	10	15	22.5	35
	AC-6b 400V	kVar	12	18	20	30	45	60
Rated conventional heating current(Ith)		A	7.5	32	43	63	95	115
Restrained surge capacity		A	≤35In			≤55In		
Mechanical durability		10^4 times	100					
Electrical durability	AC-6b 400V	10^4 times	15				12	
Operating frequency cycles/h	AC-6b 400V	times/h	300				120	
Coil features								
Controlled power voltage (Us)	AC50Hz	V	110, 220, 380					
Operating voltage range	operation voltage	V	85%~110%Us when install inclination angle is +22.5°; 70%~120%Us when install inclination angle is ±5°;					
	release voltage	V	20%~75%Us when install inclination angle is +22.5°; 20%~65%Us when install inclination angle is ±5°;					
Auxiliary contact features								
Number of auxiliary contact			12,21					
Rated conventional heating current(Ith)		A	10					
The minimum load can be connected to			6V×10mA					

C

YCC19 Contactor for Capacitor Switching

Overall and mounting dimensions

YCC19-25, 32, 43

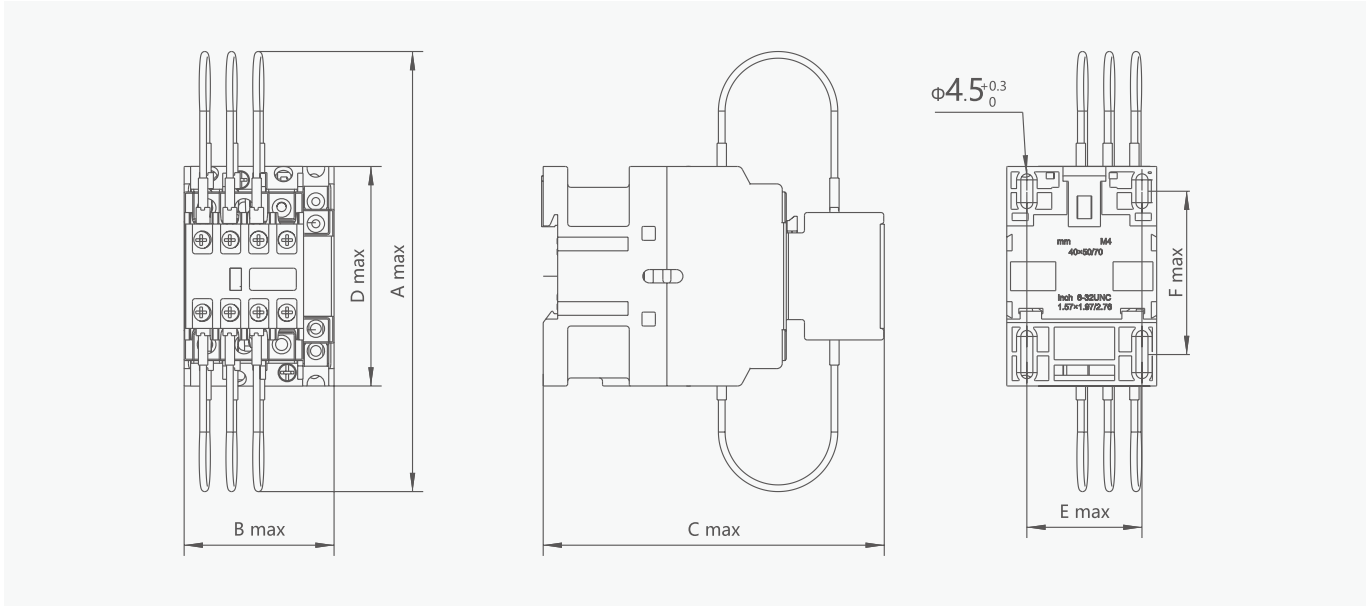

YCC19-63, 95, 115

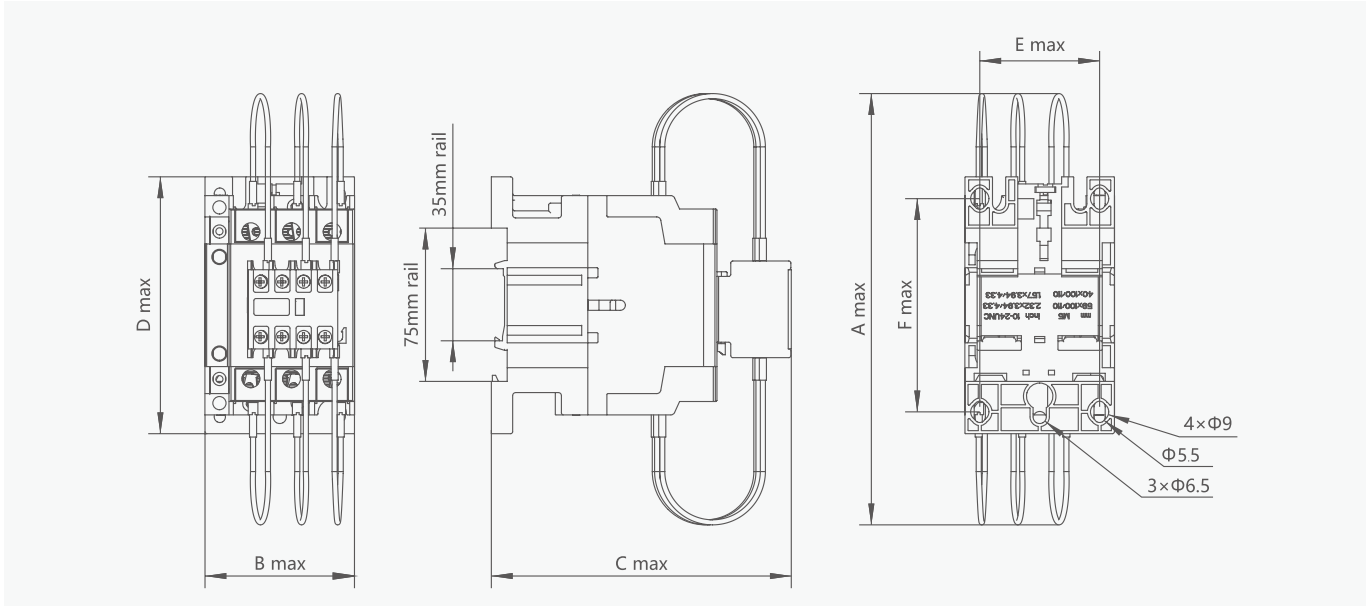

Model	Overall dimensions				Mounting dimensions	
	Amax	Bmax	Cmax	Dmax	Emax	Fmax
YCC19-25	176	45.5	122	74.5	35	50/60
YCC19-32	180	56.5	132	83	40	50/60
YCC19-43	180	56.5	132	83	40	50/60
YCC19-63	190	74.5	154	127.5	59	100/110
YCC19-95	190	85.5	160	127.5	67	100/110
YCC19-115	190	85.5	160	127.5	67	100/110

YCC7 AC Contactor



YCC7-M06-16A



YCC7-09-95A



YCC7-110A



YCC7-120-225A

General

YCC7 series AC Contactor with artistic appearance and compact structure is suitable for using starting & controlling the AC motor frequently, switching on and off the circuit at a long distance. It is used in combination with thermal relay to compose a magnetic motor starter.

- Rated operation current(Ie): 6-630A
- Rated operation voltage(Ue): 220V~690V
- Rated insulation voltage: YCC7-M06-16A 690V
  YCC7-09-110A 690V
  YCC7-120-630A 1000V
- Poles: YCC7-M06-16A 3P,4P YCC7-09-630A 3P
- Installation: Din rail and screw installation
- Standard: IEC 60947-1, IEC 60947-4-1

C

Type designation

YCC7-M □□ □□- / □

Product name	Rated current	Breaking capacity		Breaking capacity
YCC7-M	□□	□□	-/	□
Deslgn Serial Number	Rated current, expressed as the rated working current value of 400 (380)V and AC-3 (6A,9A,12A,16A)	The types and quantities of contacts, represented by numbers (reversible contactors represent the types and quantities of contacts for a single product) 10:Indicating three normally open main contacts and one normally open auxiliary contact 01: Indicating three normally open main contacts and one normally closed auxiliary contact 08 :Indicating two normally open and two normally closed main contacts 04:Indicating four normally open main contacts		Z represents DC operation, N represents reversible AC contactor

YCC7-120 □□ □□- / □

Product name	Rated current	Breaking capacity	Breaking capacity
YCC7	120	AC220V	50/60Hz
YCC7	09, 12, 18, 25, 32, 38, 40, 50, 65, 80, 95, 110, 120, 160, 185, 225, 265, 330, 400, 500, 630	48,110,127,220,230,240,380,400,415	50,60.50/60

YCC7 AC Contactor

Operating conditions

Type	Operating and Installation Conditions
Installation category	III
Pollution level	3
Protection degree	YCC7-M06-16A:IP20,YCC7-09~38: IP20; YCC7-40~95: YCC7-110 IP10,YCC7-120-630 IP10
Ambient temperature	limit of temperature: -35°C~+70°C, normal temperature: -5°C~+40°C, The average no more than +35°C within 24 hours.
Altitude	≤2000m
Ambient temperature	The maximum temperature is 70 degrees, the relative humidity of the air does not exceed 50%, and the temperature below 50% can allow higher relative humidity. If the temperature is 20°C, the air relative humidity could up to 90%, Special measures should be taken for occasional condensation due to humidity changes.
Installation position	Inclination between installation surface and vertical surface should not exceed ±5°
Shock vibration	Products should be installed and used without significant shake, shock and vibration.

Operating conditions

No.	Three-phase asynchronous motor power KW(AC-3)			Max Operating Current(AC-3 380V/400V)	Contactor Model	The number of auxiliary products	
	220V/230V	380V/400V	660V/690V			Normally Open (NO)	Normally Closed (NC)
1	1.5	2.2	3	6	YCC7-M0610	1	0
2	1.5	2.2	3	6	YCC7-M0601	0	1
3	2.2	4	4	9	YCC7-M0910	1	0
4	2.2	4	4	9	YCC7-M0901	0	1
5	2.2	4	5.5	9	YCC7-09	1	1
6	3	5.5	4	12	YCC7-M1210	1	0
7	3	5.5	4	12	YCC7-M1201	0	1
8	3	5.5	7.5	12	YCC7-12	1	1
9	3	7.5	7.5	16	YCC7-M1610	1	0
10	3	7.5	7.5	16	YCC7-M1601	0	1
11	4	7.5	10	18	YCC7-18	1	1
12	5.5	11	15	25	YCC7-25	1	1
13	7.5	15	18.5	32	YCC7-32	1	1
14	11	18.5	30	40	YCC7-40	1	1
15	15	22	37	50	YCC7-50	1	1
16	18.5	30	37	65	YCC7-65	1	1
17	22	37	37	75	YCC7-80	1	1
18	22	37	45	85	YCC7-95	1	1
19	25	45	45	100	YCC7-110	1	1
20	37	55	80	120	YCC7-120	2	2
21	45	75	100	160	YCC7-160	2	2
22	55	90	100	185	YCC7-185	2	2
23	63	110	110	225	YCC7-225	2	2
24	75	132	160	265	YCC7-265	2	2
25	90	160	200	330	YCC7-330	2	2
26	132	200	300	400	YCC7-400	2	2
27	160	250	335	500	YCC7-500	2	2
28	200	335	350	630	YCC7-630	2	2

YCC7 AC Contactor

Techniacal data

YCC7 Specifications						
Type			YCC7-M06	YCC7-M09	YCC7-M12	YCC7-M16
Main circuit characteristic						
Poles			3P, 4P			
Rated insulation voltage(Ui)		V	690			
Rated operating voltage(Ue)		V	380/400, 660/690			
Rated thermal current(Ith), AC-1			20	20	20	20
Rated operation current(Ie)	AC-3,380/400V	A	6	9	12	16
	AC-3,660/690V	A	3.8	4.9	4.9	4.9
	AC-4,380/400V	A	6	9	9	12
	AC-4,660/690V	A	3.8	4.9	4.9	4.9
Rated operational power(Pe)	AC-3,380/400V	kW	2.2	4	5.5	7.5
	AC-3,660/690V	kW	3	4	4	4
Mechanical life		10000 times	1200			
Electrical life	AC-3		120			
Frequency of operation	AC-3	times/ hour	1200			
	AC-4		300			
Connecting capability of main circuit terminal						
Flexible wire	wire	mm²	1…4			
No terminal	2 wire	mm²	1…4			
Flexible wire	1 wire	mm²	1…4			
With terminals	2 wire	mm²	1…2.5			
Hard wire	1 wire	mm²	1…4			
No terminal	2 wire	mm²	1…4			
Fastening torque		N·m	1.2			
Coil						
Rated control voltage(Us)	50Hz	V	24, 36, 48, 110, 127, 220, 380, 415			
	50/60Hz	V	24, 36, 48, 110, 127, 220, 380, 415			
	DC	V	12, 24, 36, 48, 110, 127, 220			
Allowed control circuit voltage(Us)	Operation	V	Installation inclination angle ±22.5°: 85%~110%Us; Installation inclination angle±5°: 70%~120%			
	Release(AC)	V	Installation inclination angle ±22.5°: 20%~75%Us; Installation inclination angle±5°: 20%~60%			
	Release(DC)	V	Installation inclination angle ±22.5°: 10%~75%Us; Installation inclination angle±5°: 10%~60%			
Power consumption of coil	Actuation	VA	20-40			
	Keep	VA	9.5			
	Consumption	W	1-3			
Auxiliary contacts						
Auxiliary contacts specification		A	1NO+1NC			
Rated thermal current (Ith)		A	10			
Rated operating voltage (Ue)	AC	V	380/400			
	DC	V	220			
Rated control capacit	AC-15	VA	Ue/Ie: AC380V/400V/1.5A Ith: 10A			
	DC-13	W	Ue/Ie: DC220V/0.3A			
Certification			CCC, CE, TUV, CB			

C

YCC7 AC Contactor

Technical data

Type			YCC7-09	YCC7-12	YCC7-18	YCC7-25	YCC7-32	YCC7-38	YCC7-40	YCC7-50	YCC7-65	YCC7-80	YCC7-95	YCC7-110
Main circuit characteristic														
Poles			3P											
Rated insulation voltage(Ui)		V	690											
Rated operating voltage(Ue)		V	380/400, 660/690											
Rated thermal current(Ith),AC-1			20	20	32	40	50	50	50	60	80	125	125	140
Rated operation current(Ie)	AC-3,380/400V	A	9	12	18	25	32	38	40	50	65	80	95	110
	AC-3,660/690V	A	6.6	8.9	12	18	22	22	34	39	42	49	49	86
	AC-4,380/400V	A	3.5	5	7.7	8.5	12	14	18.5	24	28	37	44	51
	AC-4,660/690V	A	1.5	2	3.8	4.4	7.5	8.9	9	12	14	17.3	21.3	25
Rated operational power(Pe)	AC-3,380/400V	kW	4	5.5	7.5	11	15	18.5	18.5	22	30	37	45	55
	AC-3,660/690V	kW	5.5	7.5	10	15	18.5	18.5	30	33	37	45	45	80
	AC-4,380/400V	kW	1.5	2.2	3.3	4	5.4	5.5	7.5	11	15	18.5	22	25.5
	AC-4,660/690V	kW	1.1	1.5	3	3.7	5.5	6	7.5	10	11	15	18.5	21.7
Mechanical life		10000 times	1200			1000			900			650		
Electrical life	AC-3	10000 times	110					90				65		
	AC-4	10000 times	22				22		17			11		
Frequency of operation	AC-3	times/hour	1200				600							
	AC-4	times/hour	300				300							
Connecting capability of main circuit terminal														
Flexible wire	1 wire	mm^2	1…4			1.5…6			2.5…25			4…50		
No terminal	2 wire	mm^2	1…4			1.5…6			2.5…16			4…25		
Flexible wire	1 wire	mm^2	1…4			1…6			2.5…25			4…50		
With terminals	2 wire	mm^2	1…2.5			1…4			2.5…10			4…16		
Hard wire	1 wire	mm^2	1…4			1.5…6	1.5…10		2.5…25			4…50		
No terminal	2 wire	mm^2	1…4			1.5…			2.5…10			4…25		
Fastening torque		N·m	1.2			1.8			5			9		
Coil														
Rated control voltage(Us)	50Hz	V	24 , 36 , 48 , 110 , 127 , 220/230 , 240 , 380/400 , 415 , 440											
	50/60Hz	V	24 , 36 , 48 , 110 , 127 , 220/230 , 240 , 380/400 , 415 , 440											
Allowed control circuit voltage(Us)	Operation	V	Installation inclination angle ±22.5°: 85%~110%Us; Installation inclination angle±5°: 70%~120%											
	Release	V	Installation inclination angle ±22.5°: 20%~75%Us; Installation inclination angle±5°: 20%~65%											
Power consumption of coil	Model	VA	CJX2s-09 YCC7-09	CJX2s-12 YCC7-12	CJX2s-18 YCC7-18	CJX2s-25 YCC7-25	CJX2s-32 YCC7-32	CJX2s-38 YCC7-38	CJX2s-40 YCC7-40	CJX2s-50 YCC7-50	CJX2s-65 YCC7-65	CJX2s-80 YCC7-80	CJX2s-95 YCC7-95	CJX2s-110 YCC7-110
	Start	VA	60			70			200			200		
	Maintain	W	≤9.0			≤14			≤25			≤29		
Auxiliary contacts														
Auxiliary contacts specification		A	1NO+1NC											
Rated thermal current (Ith)		A	10											
Rated operating voltage (Ue)	AC	V	380											
	DC	V	220											
Rated control capacity	AC-15	VA	360											
	DC-13	W	33											
Certification			CE, TUV, CB											

YCC7 AC Contactor

Technical data

Model			YCC7-120	YCC7-160	YCC7-185	YCC7-225	YCC7-265	YCC7-330	YCC7-400	YCC7-500	YCC7-630
Appearance											
Frame grade			120-225				265-400			500-630	
Agreed free air heating current(A)			200	200	275	275	315	380	450	630	700
Rated insulation voltage(V)			1000								
Rated impulse withstand voltage(kV)			12								
Poles			3P								
Rated operating current Ie(A)	AC-1		200	200	275	275	315	380	450	630	700
	200V/230V	AC-3	120	160	185	225	265	330	400	500	630
		AC-4	120	160	160	185	265	330	330	500	500
	380V/400V	AC-3	120	160	185	225	265	330	400	500	630
		AC-4	120	160	160	185	265	330	330	500	500
	660V/690V	AC-3	86	107	107	118	170	235	303	353	400
		AC-4	86	107	107	107	137	170	235	303	353
Rated control power	AC-3(kW)	200V/230V	37	45	55	63	75	90	132	160	200
		380V/400V	55	75	90	110	132	160	200	250	335
		660V/690V	80	100	100	110	160	200	300	335	350
Electrical life (10,000 times)		AC-3	120				80				
Mechanical Life(10,000 times)			600								
Main contact structure			3NO								
Number of auxiliary contacts			2NO+2NC								

Control circuit		Model		YCC7-120	YCC7-160	YCC7-185	YCC7-225	YCC7-265	YCC7-330	YCC7-400	YCC7-500	YCC7-630
Main circuit wiring	Cable connection (mm^2)	Prefabricated soft wire	1	10~150			-					
			2	10~75			-					
		Hard wire	1	10~150			50~240					
			2	10~75			50~240					
	Fastening screw size			M6	M8		M10					
	Fastening torque((N·m)			10			14					
Control circuit connection	Cable connection (mm^2)	Prefabricated soft wire	1	1~4								
			2	1~2.5								
		Hard wire	1	1~4								
			2	1~4								
	Fastening screw size			M3.5								
	Fastening torque((N·m)			1.2								
Operating range		Pull-in		(75%~120%)Us								
		Release		(20%~70%)Us								

C

C

Overall and mounting dimensions(mm)

Installation and overall dimensions of YCC7-M06~M16 series AC contactor

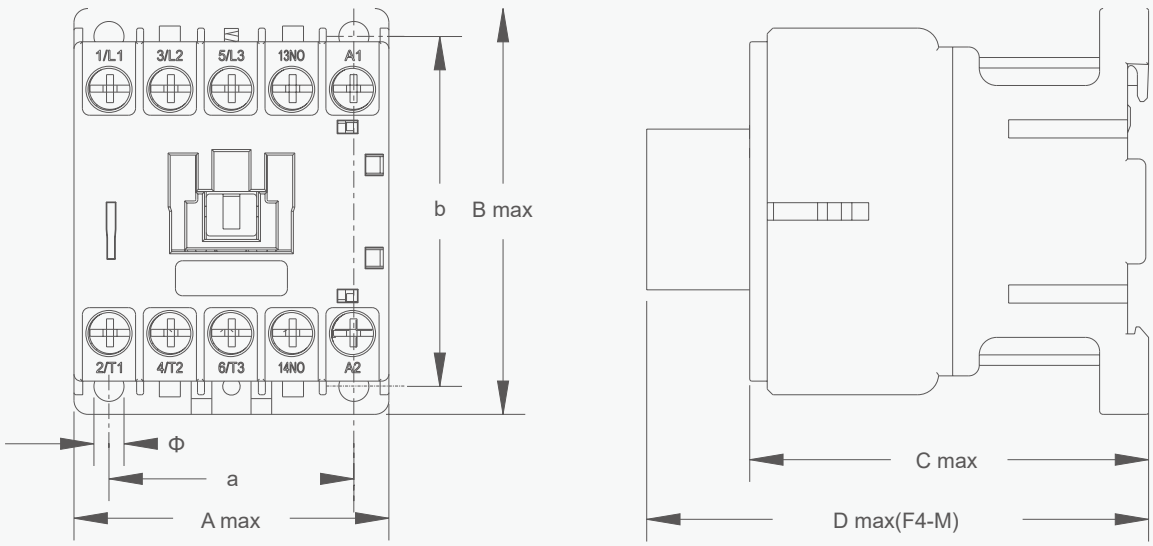

Type	Amax	Bmax	Cmax	Dmax	a	b	Φ
YCC7-M06-M16	45.5	59	58	94	35±0.35	50±0.48	4.2
YCC7-M06/Z-M16/Z	45.5	59	70	106	35±0.35	50±0.48	4.2

YCC7 AC Contactor

Overall and mounting dimensions

YCC7-09~38

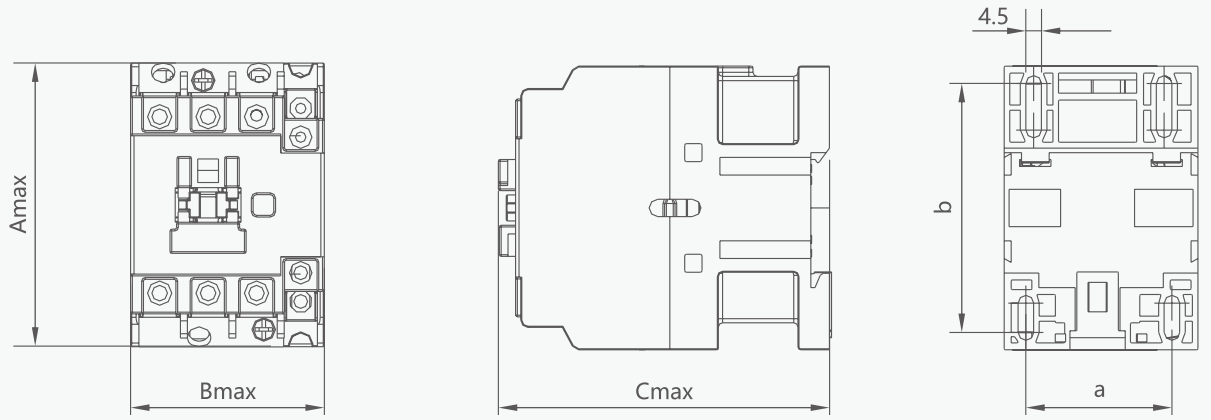

YCC7-40~95

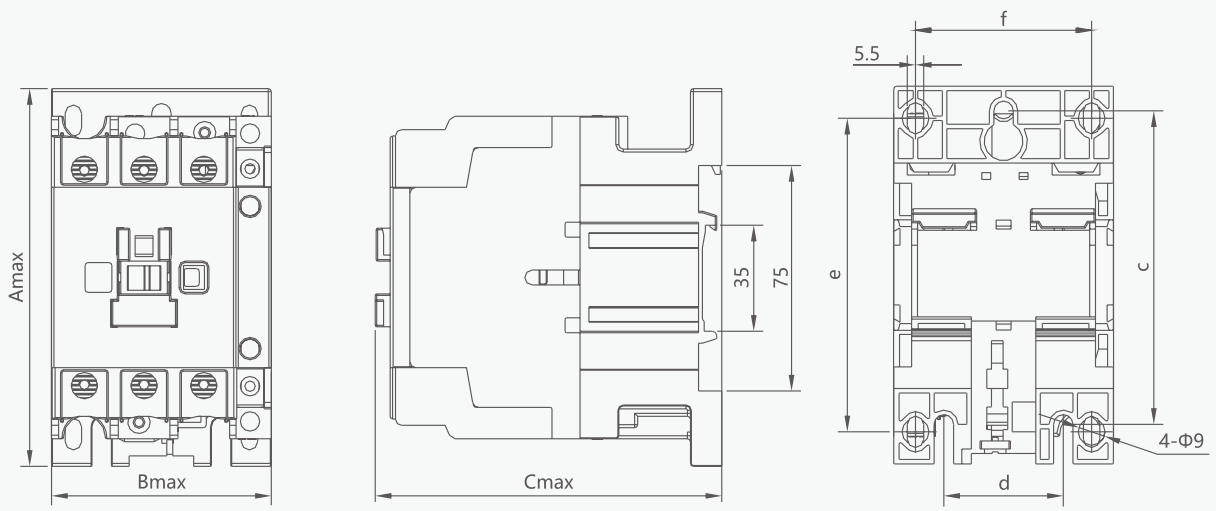

C

YCC7 AC Contactor

YCC7-110

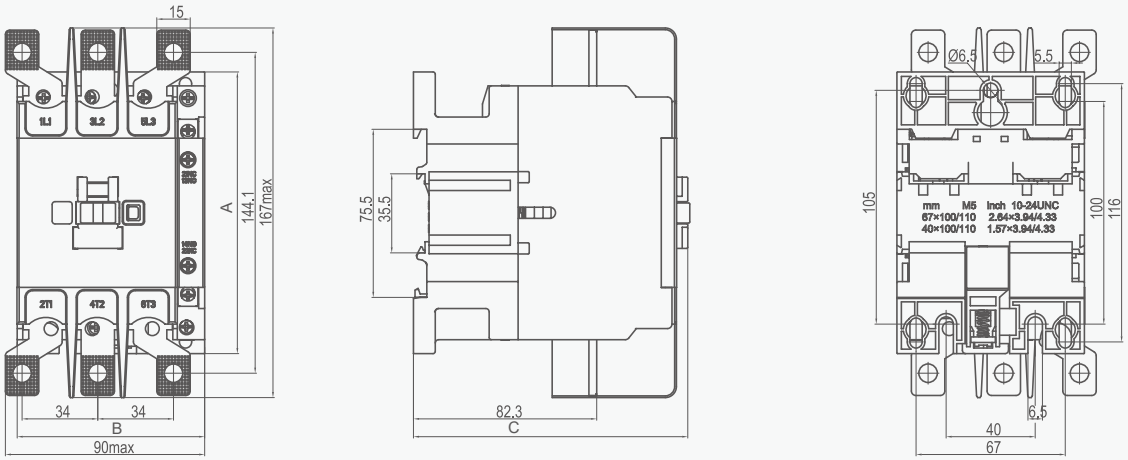

Type	Amax	Bmax	Cmax	a	b	c	d	e	f
YCC7-09,12,18	74.5	45.5	85.5	35	50/60	-	-	-	-
YCC7-25,32,38	86	56.5	97	40	50/70	-	-	-	-
YCC7-40,50,65	127.5	74.5	117	-	-	105	40	100/110	59
YCC7-80,95	127.5	85.5	125.5	-	-	105	40	100/110	67
YCC7-110	167	90	125.5	-	-	-	-	-	-
YCC7-09,12,18(004/008)	76	47	83	36	49.5/61.5	-	-	-	-
YCC7-25,32,38(004/008)	83	58	95	40	46.5/74.5	-	-	-	-
YCC7-40,50,65(004)	127.5	85.5	123	-	-	105	40	100/116	67
YCC7-40,50,65(008)	127.5	85.5	124	-	-	105	40	100/116	67
YCC7-80,95(004)	129	98	127	-	-	107.5	40.5	101/115	68
YCC7-80,95(008)	129	98	137	-	-	107.5	40.5	101/115	68

YCC7 AC Contactor

Overall and mounting dimensions

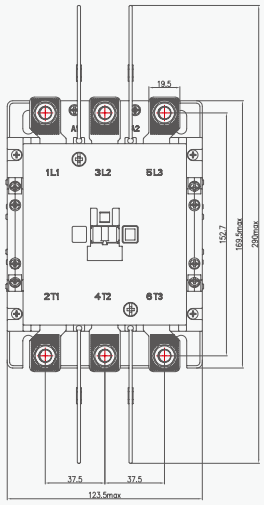

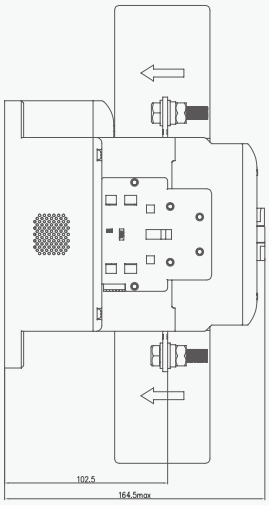

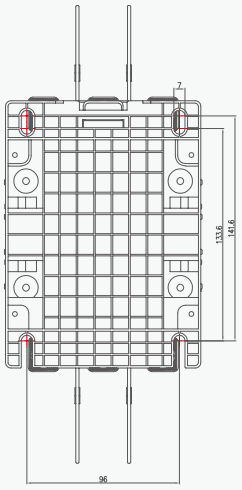

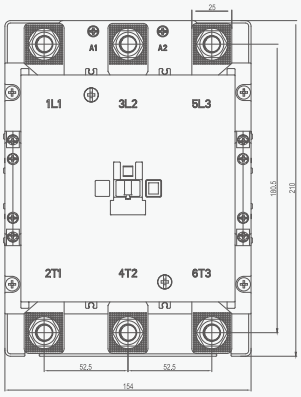

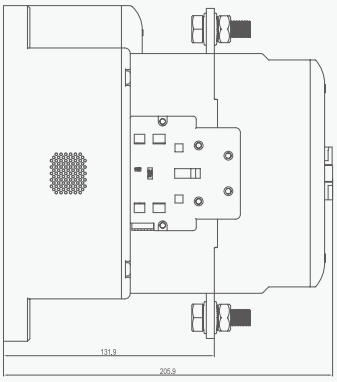

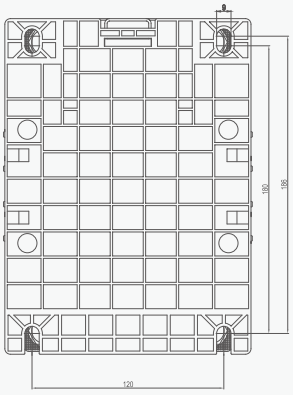

Type	Amax	Bmax	Cmax	a	b	c	d	e	f
YCC7-120-225	169.5	123.5	164.5	96±0.5	133.6±0.8	-	-	-	-
YCC7-265-400	210	154	205.9	120±0.5	186±0.8	-	-	-	-
	-	-	-	-	-	-	-	-	-
	-	-	-	-	-	-	-	-	-
	-	-	-	-	-	-	-	-	-

YCC7 AC Contactor

Installation and overall dimensions of YCC7-M06/N~M16/N series AC contactor

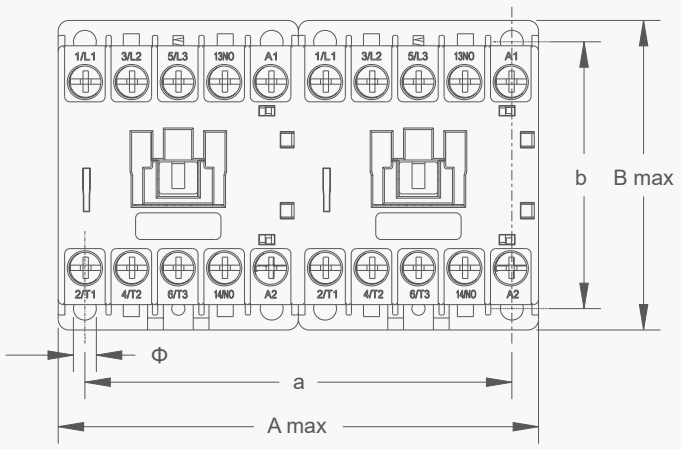

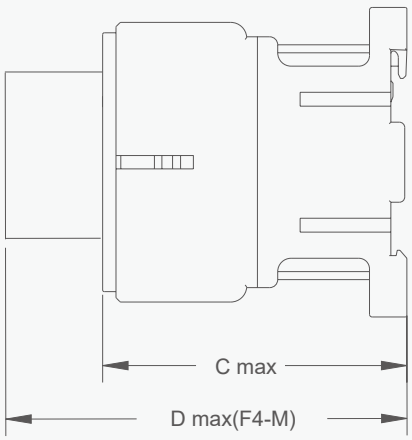

Type	Amax	Bmax	Cmax	Dmax	a	b	Φ
YCC7-M06-M16	91	59	58	94	80±0.35	50±0.48	4.2
YCC7-M06/Z-M16/Z	91	59	70	106	35±0.35	50±0.48	4.2

YCC7 AC Contactor

F4-M Auxiliary contact group

Type	Product	Configuration of contacts	
		Number of N/O contact	Number of N/C contact
F4-M20 F4-M11 F4-M02		2 1 0	0 1 2
F4-M40 F4-M31 F4-M22 F4-M13 F4-M04	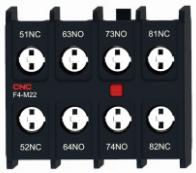	4 3 2 1 0	0 1 2 3 4

FS-M Surge suppression module

Model of Surge Suppression Module	Product	Control Voltage
FS-M		AC/DC:24V-48V AC/DC:380V-440V AC/DC:110V-240V

Derived Products When The Contactor is Assembled With Following Accessory Module

Derived products	Contactor	Accessorial modular	Picture
Reversing Contactor			
Auxiliary Contact			

C

YCC7 AC Contactor

Derived products	Contactor	Accessorial modular	Picture
Dust Cover			
Electromagnetic Starter			

YCC7-M AC Contactor selection table

Motor power kW		Maximum operation current A	Number of contacts contained in the contactor body		Contactor model
380V/400V	660V/690V	(AC-3 380V/400V)	NO	OFF	
2.2	3	6	1	0	YCC7-M0610
2.2	3	6	0	1	YCC7-M0601
2.2	3	6	4	0	YCC7-M0604
2.2	3	6	2	2	YCC7-M0608
4	4	9	1	0	YCC7-M0910
4	4	9	0	1	YCC7-M0901
4	4	9	4	0	YCC7-M0904
4	4	9	2	2	YCC7-M0908
5.5	4	12	1	0	YCC7-M1210
5.5	4	12	0	1	YCC7-M1201
5.5	4	12	4	0	YCC7-M1204
5.5	4	12	2	2	YCC7-M1208
7.5	4	16	1	0	YCC7-M1610
7.5	4	16	0	1	YCC7-M1601
7.5	4	16	4	0	YCC7-M1604
7.5	4	16	2	2	YCC7-M1608

YCC7 AC Contactor

YCC7-M AC Contactor Coil voltage specification table

AC(V) 50Hz	24	36	48	110	127	220	380	415
AC(V) 60Hz	24	36	48	110	127	220	380	415
AC(V) 50/60Hz	24	36	48	110	127	220	380	415
DC(V)	12	24	38	48	110	127	220	-

Instructions for use of correction factors in high altitude areas

Altitude (m)	2000	3000	4000
Rated impulse withstand voltage correction factor	1	0.88	0.78
Rated operation current correction factor	1	0.92	0.90

Instructions for use under abnormal ambient temperature

Ambient temperature (°C)	55	60	65	70
Correction factor	1	0.93	0.875	0.75

Complete accessories

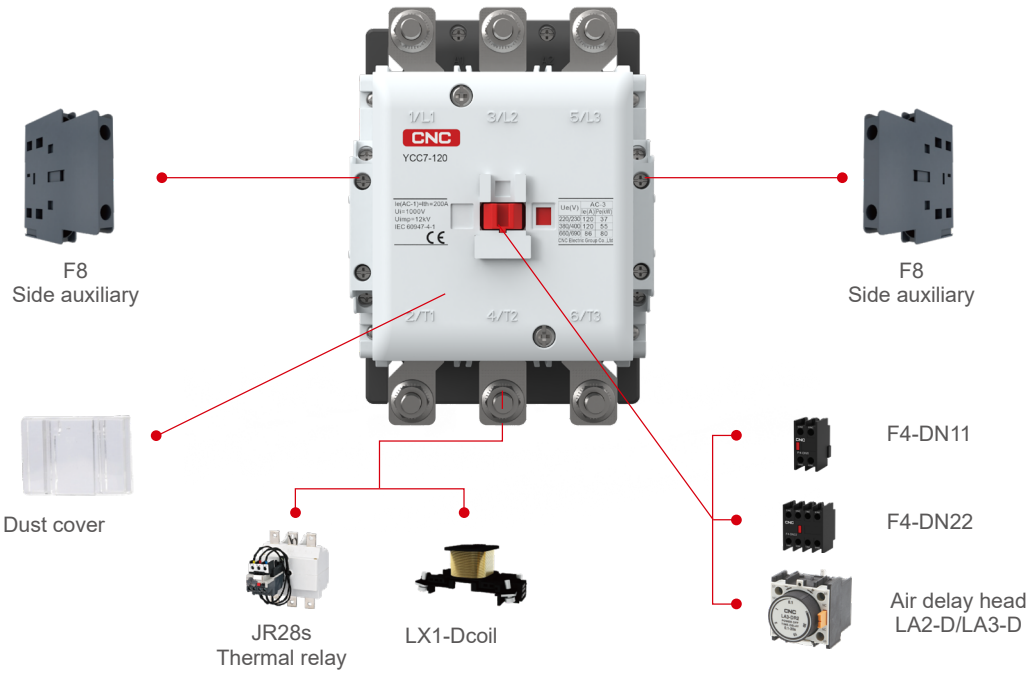

Standard two F8 Side auxiliary: To realize 2NO + 2NC auxiliary requirements, and top auxiliary can be configured as needed.

YCC7 AC Contactor

F4-DN, LA2-D, LA3-D Contact Block

Type	Product	Configuration of contacts	
		Number of N/O contact	Number of N/C contact
F4-DN20 F4-DN11 F4-DN02		2 1 0	0 1 2
F4-DN40 F4-DN31 F4-DN22 F4-DN13 F4-DN04		4 3 2 1 0	0 1 2 3 4
Type		Time-delay range	Number of time-delay contacts
LA2-DT0 LA2-DT2 LA2-DT4		0.1s~3s 0.1s~30s 10s~180s	NO+NC NO+NC NO+NC
LA3-DR0 LA3-DR2 LA3-DR4		0.1s~3s 0.1s~30s 10s~180s	NO+NC NO+NC NO+NC

YCC7 AC Contactor

LX1S Coil

Type	Product	Coil voltage Us(V) / Frequency (Hz)	24	36	42	48	110	127	220	230	240	380	400	415	440	600
LX1S-D2 09-18 LX1S-D4 25-38 LX1S-D6 40-65 LX1S-D8 80-95		AC 50Hz	B5	C5	D5	E5	F5	G5	M5	P5	U5	Q5	V5	N5	R5	X5
		AC 60Hz	B6	C6	D6	E6	F6	G6	M6	P6	U6	Q6	V6	N6	R6	X6
		AC 50/60Hz	B7	C7	D7	E7	F7	G7	M7	P7	U7	Q7	V7	N7	R7	X7
YCC7-120-225	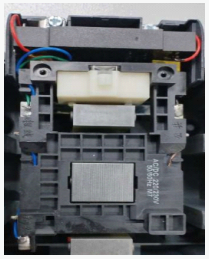	50/60Hz	AC/DC 220V, AC/DC 380V													
YCC7-265-400		50/60Hz	AC/DC 220V, AC/DC 380V													
YCC7-500-630		50/60Hz	AC/DC 220V, AC/DC 380V													
LX1S-D2 09-18 LX1S-D4 25-38	Wide voltage	AC 50/60Hz DC	AC/DC 100–240V (Pick-up: 90%–105%, Drop-out: 20%–85%)													

C

YCC7 AC Contactor

Derived Products When The Contactor is Assembled With Following Accessory Module

Derived products	Contactor	Accessory module	Picture
Time-delay Contactor			
Reversing Contactor	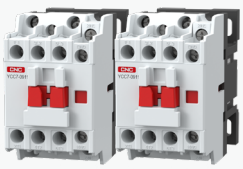		
Magnetic Starter			
Front Auxiliary Contact			
Side Auxiliary Contact			
Changeover Capacitor AC Contactor			
Dust Cover			

YCC7 AC Contactor

Wiring diagram

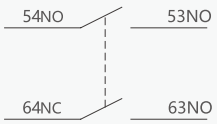

F4-DN20

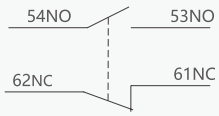

F4-DN11

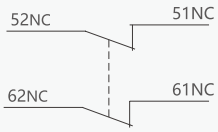

F4-DN02

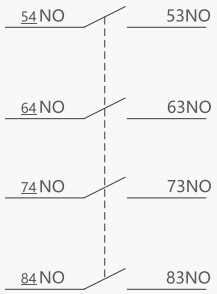

F4-DN40

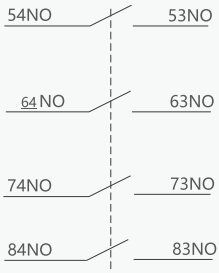

F4-DN31

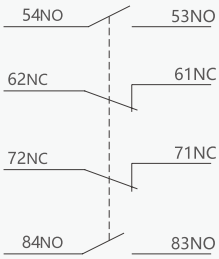

F4-DN22

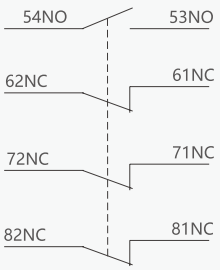

F4-DN13

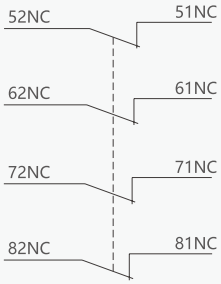

F4-DN04

C

YCC7 AC Contactor

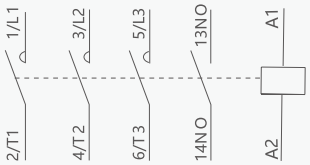

YCC7-M06-16(10)

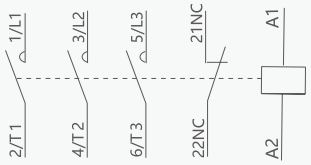

YCC7-M06-16(01)

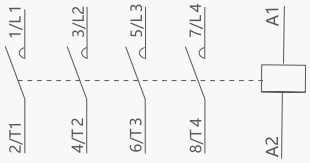

YCC7-M06-16(04)

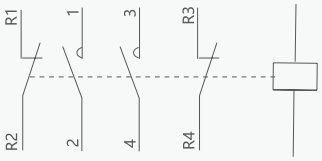

YCC7-M06-16(08)

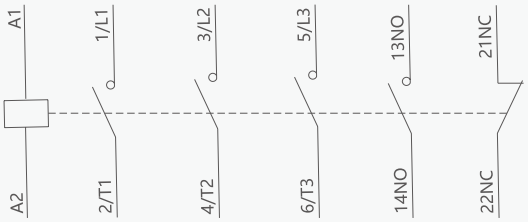

YCC7-09-110

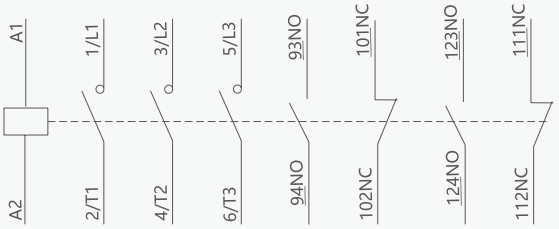

YCC7-120-630

CKJ5-125~630 Series Vacuum AC contactor



General

CKJ5 series vacuum AC contactors (hereinafter referred to as contactors) are mainly used in circuits with AC 50Hz, rated working voltage up to 1140V, and rated working current up to 630A. They are used for long-distance connection and disconnection of circuits, and can be combined with appropriate thermal overload relays or electronic protectors to form vacuum electromagnetic starters. They are particularly suitable for forming isolated vacuum electromagnetic starters.

Type designation

C K J 5 □

- Rated working current(AC-3)
- DesIgn Serial Number
- Exchange
- Vacuum
- Contactor

Operating Conditions

1. The ambient air temperature is -5°C~+40°C, and its average value within 24 hours does not exceed+35°C.
2. Altitude not exceeding +2000m.
3. Atmospheric conditions: When the maximum temperature is+40°C, the relative humidity of the air does not exceed 50%. Higher relative humidity can be allowed at lower temperatures, such as reaching 90% at 20°C.Special measures should be taken for occasional condensation caused by temperature changes.
4. Pollution level: Level 3.
5. Installation category: Class III.
6. Installation conditions: Vertical installation, with an inclination of no more than ± 5 ° between the installation surface and the horizontal or vertical plane.
7. Impact vibration: The product should be installed and used in a place without significant shaking, impact, and vibration.

Features

1. Main specifications:
2. Divided by current grade: 125,160,250,400,630,
3. According to the contactor coil rated control power supply voltage Us divided: exchange 50Hz: 36V,110V,127V,220V,380V.
4. Technical parameters:
5. The rated working voltage (Ue) and rated insulation voltage (Ui) of the contactor are 1140V;
6. 4.2.2 The main parameters and technical performance indicators of the contactor are shown in Table 1.

CKJ5-125~630 Series Vacuum AC contactor

Table 1

Contactor model		CKJ5-125	CKJ5-160	CKJ5-250	CKJ5-400	CKJ5-630
Agreed free air heating current Ith (A)		125	160	250	400	630
Rated operational voltage Ue(V)		380/660/1140				
The maximum power (kW) of a controllable three-phase squirrel cage motor under the AC-3 usage category	380V	62	80	125	200	315
	660V	110	140	220	350	560
	1140V	185	235	370	590	930
Rated working current Ie (A)	1140V AC-3	125	160	250	400	630
	1140V AC-4	100	130	200	330	500
Mechanical life	Operating frequency (times/h)	1200	1200	1200	1200	1200
	Number of times($x10^4$)	300	300	300	300	300
Electrical lifespan(400V)	Operating frequency (times/h)	600	600	600	120	120
	Number of times($x10^4$)	60	60	60	60	60
Coil power(W)	Suction power ≤	287	287	430	703	1212
	Holding power ≤	16	16	19	21	41
Number of wires		1~2	1~2	1~2	1~2	2
Wire cross-sectional area(mm^2)		25~50	35~70	70~120	150~240	150~200
Copper Bar(mm^2)		-	-	-	-	40x5
Connecting bolts(mm^2)		M8	M8	M10	M10	M12
Tightening torque(N·m)		6	6	10	10	14
Matched SCPD		NT3 315A	NT3 315A	NT3 400A	NT3 500A	NT3 630A
Basic parameters of auxiliary contacts		AC-15:380V/1.9A;DC-13:220V/ 0.31A; Ui=690V,Ith=10A,Uimp=12kV				
Number of auxiliary contacts		CKJ5-125~160 can be used with two normally open and one normally closed CKJ5-250~400 can be four normally open and three normally closed CKJ5-630 can be three normally open and two normally closed				

The auxlary contacts of CKJ5-125-400 products connected to the coil are the first set of normally closed auxliary contacts of NK2-1(A) type auxiliary contact group.The auxiliary contacts of CKJ5-630 connected to the coil are the first set of normally closed auxliary contacts of the auxiliary contact group and cannot be replaced. CKJ5-125-160 can be equipped with an additional set of two normally open and two normally closed auxiliary contacts,which need to be specially customized and specified.

4.3 Action range: The suction voltage is between 85% Us and 110% Us; The release voltage is between 10% Us and 75% Us.

Structural characteristics

The contactor consists of an electromagnetic svstem, a contact svstem, and auxiliary contacts. The CKJ5-125~400 contactor is a three-dimensional structure, with the upper part being the contact system and the lower part being the electromagnetic system. The electromagnetic system consists of a coil, iron core, and rectifer device, installed in a base made of cast aluminum alloy or DMC. The CKJ5-630 contactor is arranged in a flat structure, with a contact system on the left and an electromaanetic system on the right. The contact system consists of dynamic and static contacts and a vacuum arc extinguishing chamber, instaled in a base made of insulating materials. The electromagnetic system adopts an energy-saving scheme of DC dual coil and dual winding.The vacuum arc extinguishing chamber adopts a new type of contact material for one-time sealing and discharging. The product has a compact structure, making it easy to assemble explosion-proof electromagnetic starters and switchgear.

CKJ5-125~630 Series Vacuum AC contactor

Overall and mounting dimensions(mm)

The appearance and installation dimensions are shown in Figures 1 to 4 and Table 2.

Figure 1
CKJ5-125~160 Appearance and Installation Dimensions

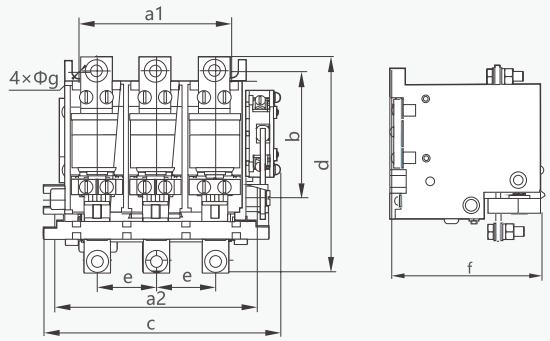

Figure 2
CKJ5-250 Appearance and Installation Dimensions

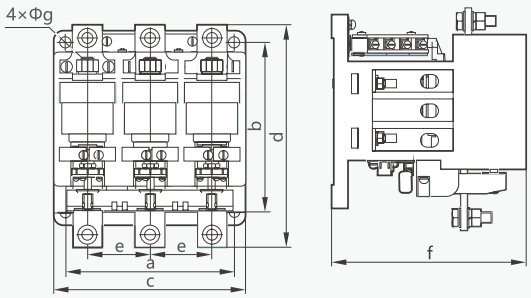

Figure 3
CKJ5-400 Appearance and Installation Dimensions

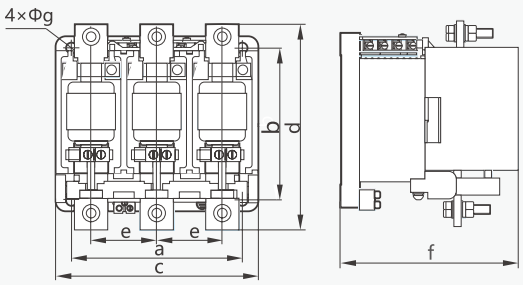

Figure 4
CKJ5-630 Appearance and Installation Dimensions

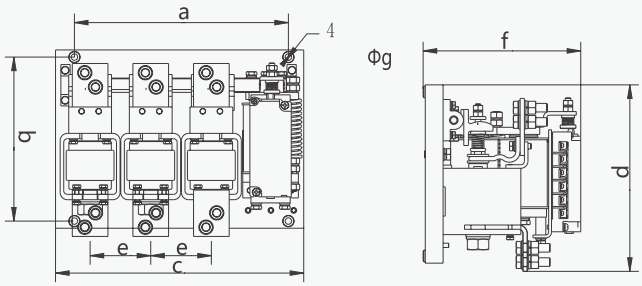

Table 2

Model / Parameter	a	b	c(max)	d(max)	e	f(max)	g
CKJ5-125	106±0.36/137±0.46	87±0.36	173	150	41	130	9
CKJ5-160	106±0.36/137±0.46	87±0.36	173	150	41	130	9
CKJ5-250	160±0.51	160±0.51	183	213	59	186	12
CKJ5-400	180±0.7	160±0.51	216	221	70	192	11
CKJ5-630	300±0.8	230±0.8	353	265	85	225	9

YCK Air Conditioning Contactor



C

General

YCK air conditioning contactor is an electrical component used to control the start and stop of electrical equipment in an air conditioning system, such as the compressor and fan. The main function of the contactor is to supply power to various devices in the air conditioning system by controlling the circuit switch.

Application: YCK air conditioning contactors are mainly used in central air conditioning systems, residential air conditioners, commercial air conditioners, and other air conditioning equipment to control the start and stop of devices like compressors, fans, and condensers.

Standards: IEC 60947-4-1

Type designation

YC K -30 /2 220V

- 220V — Voltage:220V
- 2 — Number of poles:Two poles
- 30 — Current:30A
- K — Air conditioner specific contactor
- YC — Company code

Product model: YCK-30/1,YCK-30/2,YCK-30/3,YCK-30/4,YCK-40/1,YCK-40/2,YCK-40/3,YCK-40/4,YCK-50/3,YCK-60/3,YCK-75/3,YCK-90/3

Operating conditions

1. Ambient temperature: -40°C~+65°C
2. Relative humidity: ≤20% at 40°C; ≤90% at 20°C
3. Altitude: ≤2000m
4. Environmental conditions: no harmful gases and vapors, no conductive or explosive dust, no severe mechanical vibration

Technical parameter

Ar extinguishing cover		Standard configuration
Insulation materials		130°C Class B
Temperature range		-40°C to+65°C,-40F to+150F
Weight		50-60FLA 0.91kg,75-90FLA 1.81kg
Terminal type		Aluminum pressure wire box
Wiring size		50/60FLA crimping box 14-2 75/90FLAcrimping box 14-1
Recommended locking torque	Crimping box	5.67N.m
Coil terminal	Quick connect terminal	Double.250 "insert or#6-32 screw/.250"insert
	Main circuit terminal	Double.250 "Insert

YCK Air Conditioning Contactor

Coil Voltage	YCK-30/1,YCK-40/1 One pole contactor				YCK-30/2,YCK-40/2 Two pole contactor			
	24	120	208/240	277	24	120	208/240	277
Coil resistance	18	420	1800	2500	11	237	1000	1600
Pull-in voltage	18	88	177	221	18	88	177	221
Release voltage	6-15	20-70	40-140	50-165	6-15	20-70	40-140	50-165
Power consumption ofsuction ·50Hz	31	31	31	31	33	33	33	33
Power consumption of suction ·60Hz	28	28	28	28	30	30	30	30
Maintain power consumption-50Hz	6	6	6	6	8	8	8	8
Maintain power consumption-60Hz	5	5	5	5	6.5	6.5	6.5	6.5
Maximum coil voltage	30	132	264	300	30	132	264	300

Coil Voltage	YCK-30/3,YCK-40/3 Triple pole contactor				YCK-30/4,YCK-40/4 Quadru pole contactor			
	24	120	208/240	277	24	120	208/240	277
Coil resistance	7	180	720	900	6	150	600	750
Pull-in voltage	18	88	177	221	18	88	177	220
Release voltage	6-15	20-70	40-140	50-165	6-15	20-70	40-140	65-185
Power consumption ofsuction ·50Hz	65	65	65	65	62	62	62	62
Power consumption of suction ·60Hz	60	60	60	60	59	59	59	59
Maintain power consumption-50Hz	7.5	7.5	7.5	7.5	9	9	9	9
Maintain power consumption-60Hz	6	6	6	6	7	7	6	7
Maximum coil voltage	30	132	264	300	30	132	264	300

Coil Voltage	YCK-50/3,YCK-60/3 contactor				YCK-75/3,YCK-90/3 contactor			
	24	120	208/240	277	24	120	208/240	277
Coil resistance	7	180	720	900	0.65	16	64	85
Pull-in voltage	18	93	177	235	18	88	177	220
Release voltage	6-15	20-70	40-140	50-165	6-15	20-70	40-110	65-185
Power consumption ofsuction ·50Hz	140	140	140	140	285	285	285	285
Power consumption of suction ·60Hz	132	132	132	132	240	240	240	240
Maintain power consumption-50Hz	20	20	20	20	42	42	42	42
Maintain power consumption-60Hz	14	14	14	14	27	27	27	27
Maximum coil voltage	30	132	264	300	30	132	264	300

YCK Air Conditioning Contactor

Overall and mounting dimensions(mm)

Dimensions of one pole in inches

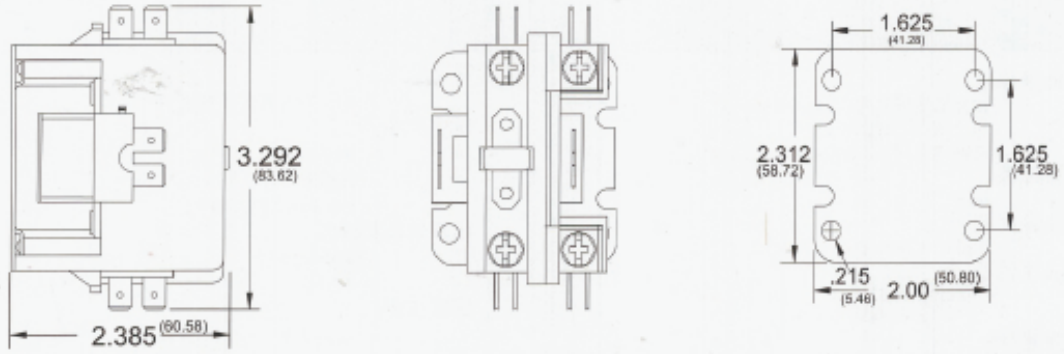

Dimensions of two pole in inches

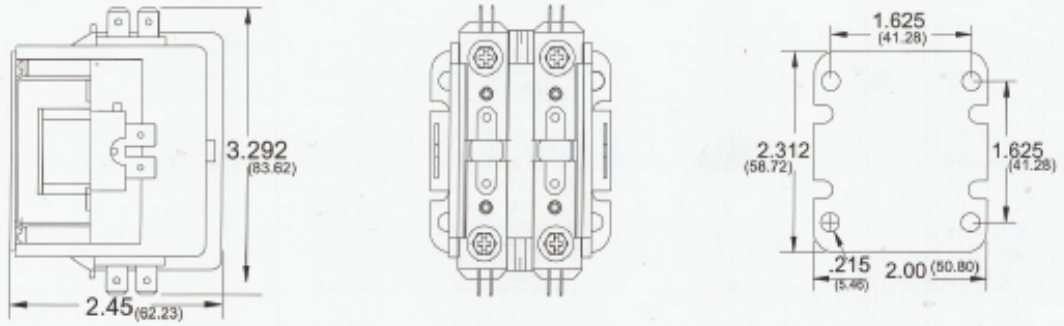

Three pole external dimensions in inches

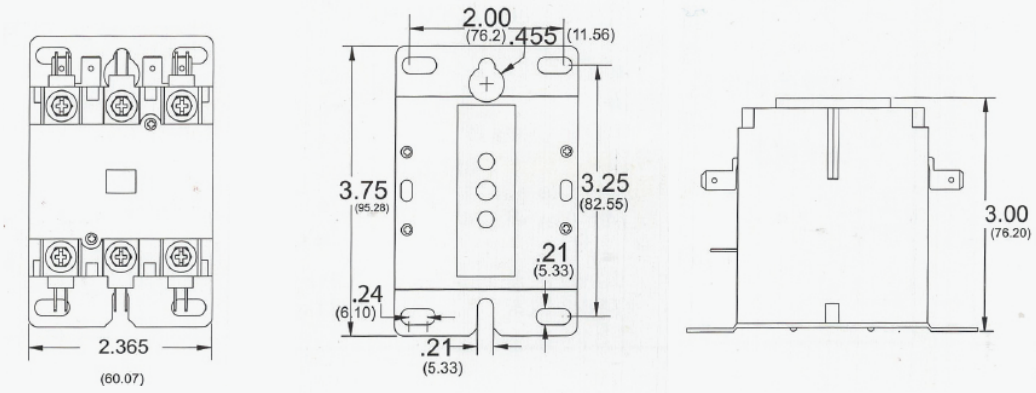

YCK Air Conditioning Contactor

50-60FLA external dimensionsin inches

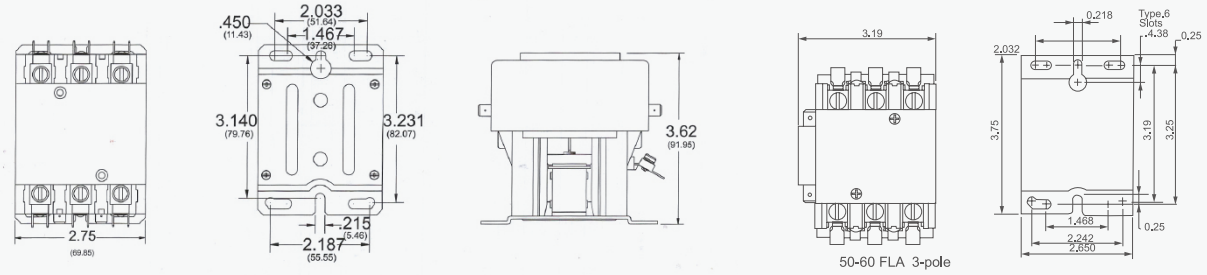

75-90FLA external dimensionsin inches

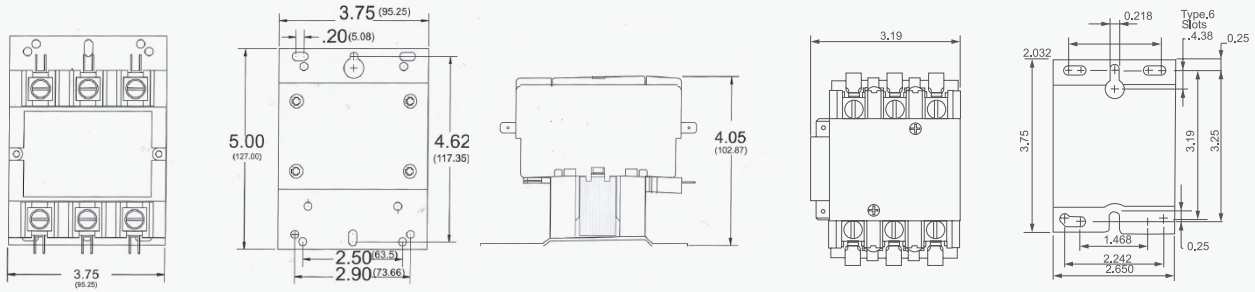

Quadrupole dimensions in inches

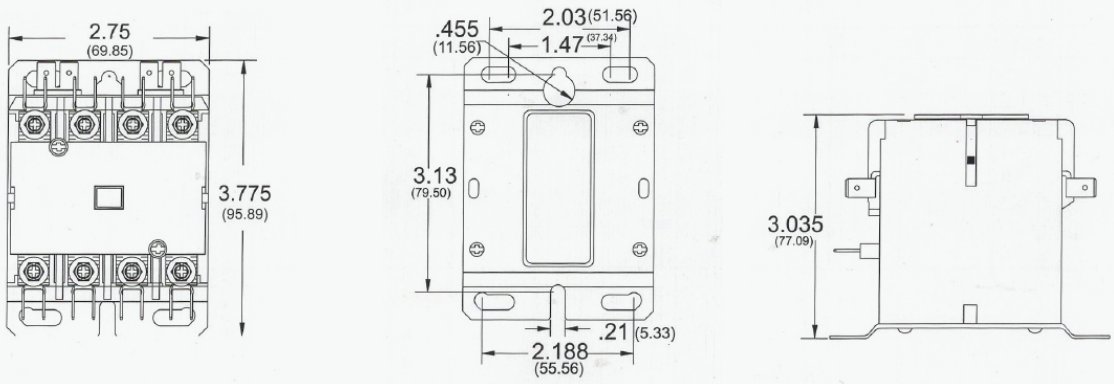

C

CJX2s-N(CJX2i-N) Mechanical Interlocking Contactor



CJX2s-N



CJX2i-N

C

Technical data

Type	Rated operation current(Ie)(A)	Rated thermal current(Ith)(A)	Rated operational power in category AC-3 (kW)	
			380V	660V
CJX2s(CJX2i)-09N	9	20	4	5.5
CJX2s(CJX2i)-12N	12	20	5.5	7.5
CJX2s(CJX2i)-18N	18	32	7.5	10
CJX2s(CJX2i)-25N	25	40	11	15
CJX2s(CJX2i)-32N	32	50	15	18.5
CJX2s(CJX2i)-38N	38	50	15	18.5
CJX2s(CJX2i)-40N	40	50	18.5	30
CJX2s(CJX2i)-50N	50	60	22	33
CJX2s(CJX2i)-65N	65	80	30	37
CJX2s(CJX2i)-80N	80	95	37	45
CJX2s(CJX2i)-95N	95	95	45	55

Overall and mounting dimensions(mm)

CJX2s(CJX2i)-09~38N

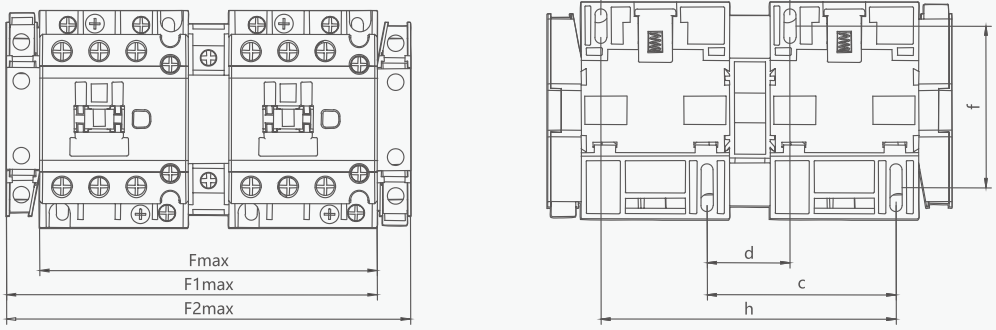

CJX2s(CJX2i)-40~95N

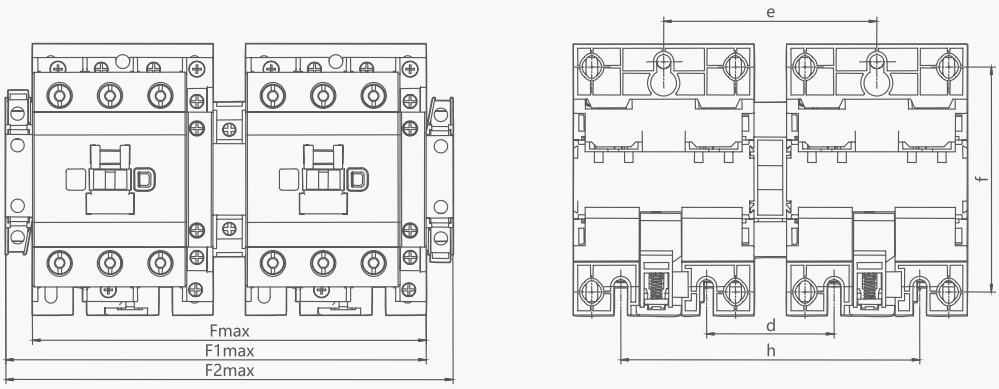

Type	Fmax	F1max	F2max	c	d	e	f	h
CJX2s(CJX2i)-09N, 12N, 18N	107	120	131	60	25	60	50/60	95
CJX2s(CJX2i)-25N, 32N, 38N	129	142	153	71	31.5	71	50/60	111.5
CJX2s(CJX2i)-40N, 50N, 65N	163	180	193	-	50	90	100/110	130
CJX2s(CJX2i)-80N, 95N	186	202	215	-	60	100	100/110	140

CJX2-F-N Mechanical Interlocking Contactor



Technical data

Type	Rated operation current (Ie) (A)	Rated thermal current (Ith) (A)	Rated operational power in category AC-3 (kW)		Rated insulation voltage(Ui) (V)
			380V	660V	
CJX2-F115N	115	200	4	55	1000
CJX2-F150N	150	200	5.5	75	1000
CJX2-F185N	185	275	7.5	90	1000
CJX2-F225N	225	275	11	110	1000
CJX2-F265N	265	315	18.5	132	1000
CJX2-F330N	330	380	22	160	1000
CJX2-F400N	400	450	30	200	1000
CJX2-F500N	500	630	37	250	1000
CJX2-F630N	630	800	45	335	1000
CJX2-F1250N	AC-1/1250A	1250	AC-1 No frequent operation. It is recommended to operate once a day.		1250

Overall and mounting dimensions(mm)

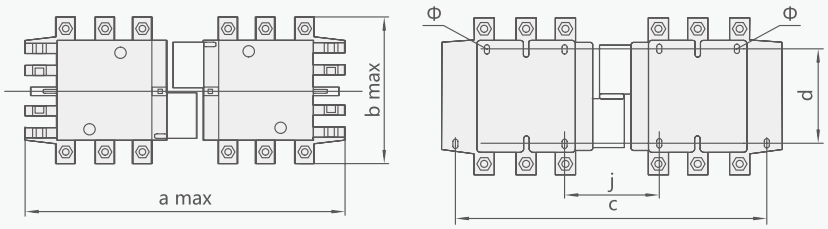

Type	Pole	a max	b max	c	d	j
CJX2 - F115N	3P	350	163	330	110~120	71
	4P	425	208	370		108
CJX2 - F150N	3P	350	171	330		71
	4P	425	211	370		111
CJX2 - F185N	3P	350	174	330		78
	4P	430	223	370		118
CJX2 - F225N	3P	350	197	330		78
	4P	430	243	370		118
CJX2 - F265N	3P	450	203	428		109
	4P	546	249	485		157
CJX2 - F330N	3P	450	206	428		124
	4P	546	251	485		172
CJX2 - F400N	3P	485	206	460	170~180	157
	4P	595	251	485		157
CJX2 - F500N	3P	485	238	460		156
CJX2 - F630N	3P	650	304	625	180~190	139
	4P	810	364	785		139
CJX2 - F800N	3P	650	304	625		139
CJX2 - F1250N	3P	810	338	785		139

JR28s/JR28se Thermal Relay

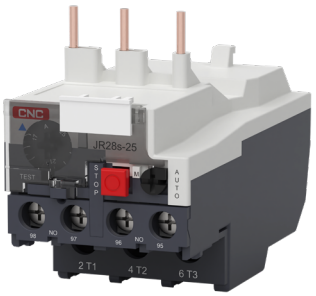

JR28se

General

JR28s/JR28se series thermal overload relay are suitable for overload and phase-failure protection of AC motors with frequency of 50/60Hz, voltage up to 690V, current up to 0.1-93A under 8-hours duty or uninterrupted duty.

Functions provided by these relays, are phase-failure protection, ON/OFF indication, temperature compensation, and manual/ automatic reset.

Standard: IEC 60947-4-1

The relays can be mounted onto contactors or installed as single units.

Technical data

NO.	Times the setting current		Release time	Test condition
1	1.05		>2h	Start from Cold status
2	1.2		<2h	Start from Heat status right after item no.1
3	1.5		<2min	
4	7.2		2s<Tp≤10s	Start from Cold status
	Any two phases	Another phase		
5	1.0	0.9	>2h	Start from Cold status
6	1.15	0	<2h	Start from Heat status right after item no.5

JR28-11.5

Products appearance	Rated current (A)	Matched fuse specifications(A)		Matched contactor model
		aM	gG	
	0.1~0.16	0.25	2	YCC7-M06 YCC7-M09 YCC7-M12 YCC7-M16
	0.16~0.25	0.5	2	
	0.25~0.4	1	2	
	0.4~0.63	1	2	
	0.63~1	2	4	
	1~1.6	2	4	
	1.25~2	4	6	
	1.6~2.5	4	6	
	2.5~4	6	10	
	4~6	8	16	
	5.5~8	12	20	
	7~10	12	20	
	9~13	16	25	
	12-18A	16	35	

JR28s/JR28se Thermal Relay

Selection

Products appearance	Rated current (A)	Matched fuse specifications(A)		Matched contactor model
		aM	gG	
 JR28se-25	0.1~0.16	0.25	2	YCC7-09 YCC7-12 YCC7-18 YCC7-25
	0.16~0.25	0.5	2	
	0.25~0.4	1	2	
	0.4~0.63	1	2	
	0.63~1	2	4	
	1~1.6	2	4	
	1.25~2	4	6	
	1.6~2.5	4	6	
	2.5~4	6	10	
	4~6	8	16	
	5.5~8	12	20	
	7~10	12	20	
	9~13	16	25	
	12~18	20	35	
	17~25	25	50	
	23-32	25	50	
 JR28se-36	23~32	40	63	YCC7-32 YCC7-38
	28~36	40	80	
 JR28se-93	23~32	40	63	YCC7-40 YCC7-50 YCC7-65 YCC7-80 YCC7-95
	30~40	40	100	
	37~50	63	100	
	48~65	63	100	
	55~70	80	125	
	63~80	80	125	
	80~93	100	160	

Products appearance	Name	Usage	Order Number
	JR28se-25 Base	Form an independent installation product with JR28-25	C030270
	JR28se-36 Base	Form an independent installation product with JR28-36	C030271
	JR28se-93 Base	Form an independent installation product with JR28-93	C030272

JR28s/JR28se Thermal Relay

Overall and mounting dimensions(mm)

JR28se-25

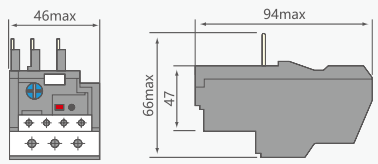

JR28se-36

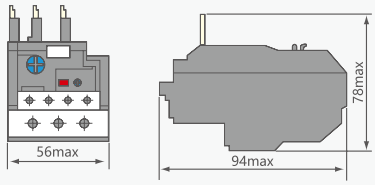

JR28se-93

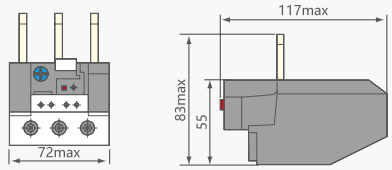

C

JR28se-25 with mounting base

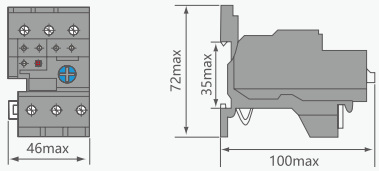

JR28se-36 with mountiong base

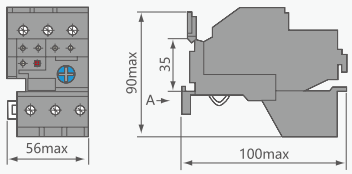

JR28se-93 with mounting base

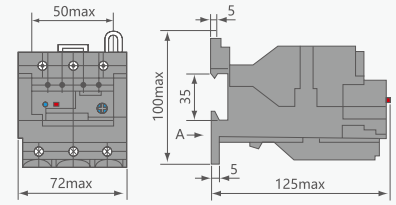

JR28-11.5

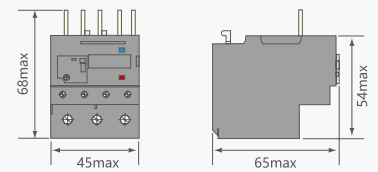

YCQ7 Series

Magnetic Starter



CE IP55

- High compatibility and high reliability
- Convenient maintenance and repair

CNC ELECTRIC

LE1 Magnetic Starter



General

LE1 Magnetic starter is suitable for using in the circuits the rated voltage up to 690V AC 50Hz or 60Hz.With AC-3 type,LE1 is used for starting or halting of three-phase squirrel case electromotor which rated working voltage is 380V and rated working current is from 9A to 95A. Combining with matchable thermal relay can protect the motor from overload and phase failure.

General

1. Ambient air temperature:-5°C~+40°C, average temperature of 24 hours must below +35°C
2. Altitude:≤2000m
3. Relative humidity: The maximum temperature of 40 degrees,the air relative humidity not exceed 50%,at a lower temperature can allow for a higher relative humidity.The humidest month's average lowest temperature must be below 25°C, the max relative humidity of that month should not exceed 90%.If humidity changes as a result of occasional gel generated,should eliminate it.
4. Pollution level: 3
5. Installation category: III
6. Installation position: The installation degree of the tilt and vertical plane should not exceed ±5°.
7. Shock vibration:Products should be installed and used without severe shake, shock and vibration of the place.



Technical data

Type	Maximum power AC3 duty (kW)			Rated current (A)	Matched thermal relay (A)	Setting current range (A)
	220V 230V	380V 400V	660V 690V			
LE1 - 09	2.2	4	5.5	9	JR28-25 JR28s-25	2.5~4, 4~6, 5.5~8
LE1 - 12	3	5.5	7.5	12	JR28-25 JR28s-25	7~10, 9~13
LE1 - 18	4	7.5	10	18		12~18
LE1 - 25	5.5	11	15	25		17~25
LE1 - 32	7.5	15	18.5	32		23~32
LE1 - 40	11	18.5	30	40	JR28-93 JR28s-93	23~32, 30~40 37~50, 48~65 55~70, 63~80 80~93
LE1 - 50	15	22	33	50		
LE1 - 65	18.5	30	37	65		
LE1 - 80	22	37	45	80		
LE1 - 95	25	45	45	95		

Overall and mounting dimensions(mm)

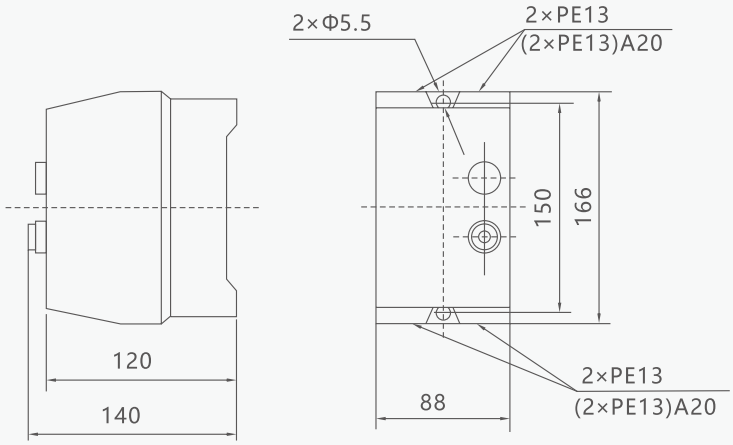

LE1-D09, D12, D18

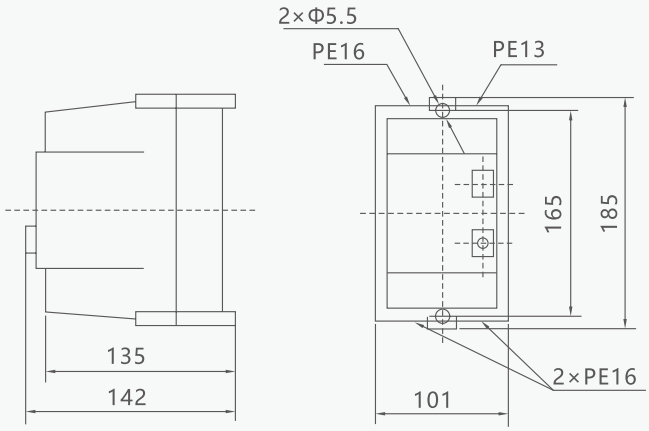

LE1-D25, D32

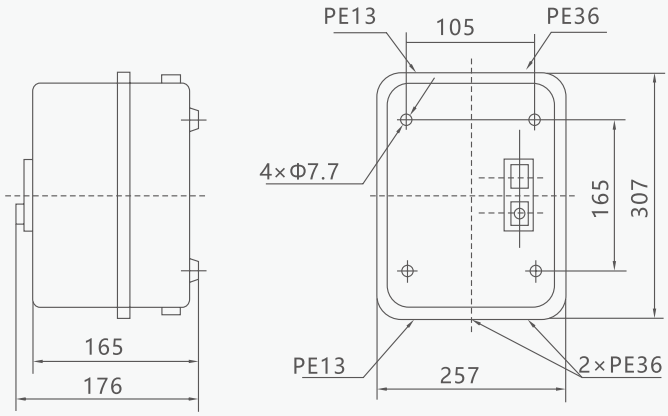

LE1-D40, D50, D65, D80, D95

C

YCQ7 Magnetic Starter

Overview

C



High reliability

Silver rivet and hot riveting process make electrical contact more reliable

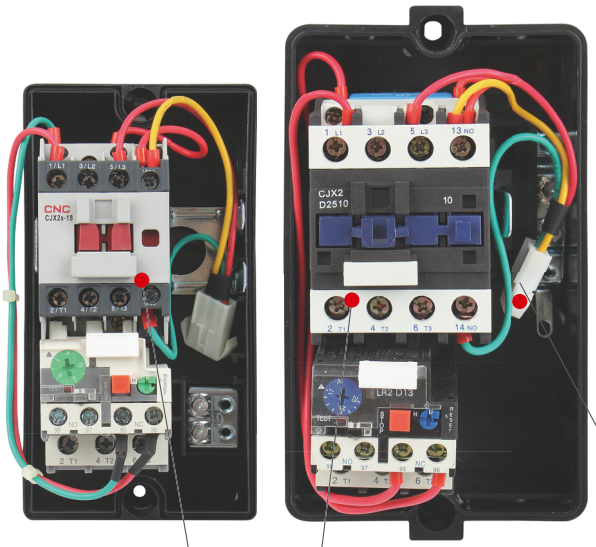

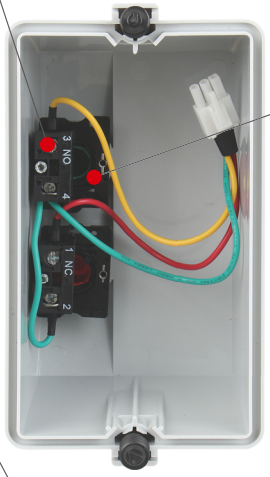

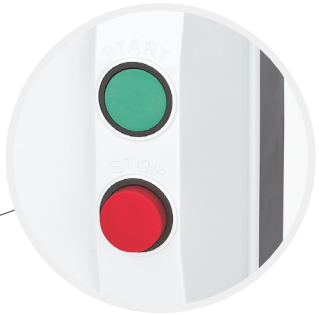

High compatibility

Optional for XB2-E series flat button, bullet button, Flat-headed button with light etc.

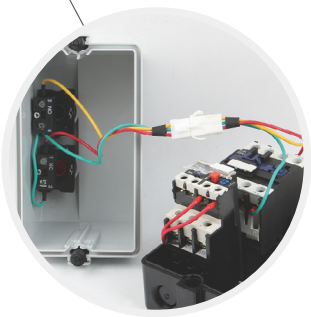

Convenient maintenance and repair

It is more convenient to replace the components by connecting the electrical circuit with connectors.



More options

CJX2-D and CJX2s series AC contactors are optional

YCQ7 Magnetic Starter



General

YCQ7 series magnetic starter is suitable for those circuits whose rated voltage is up to 660V, AC 50Hz or 60Hz, rated control power to 45kW and current to 95A. It is used to control the direct start and stop of the motor, and the starter with thermal overload relay protects the motor from overload and phase failure.

Standard: IEC/EN 60947-4-1.

Type designation

YC Q 7 -□

- Rated current
- Design code
- Magnetic starter
- Company code

Operating Conditions

1. Altitude:≤2000m.
2. Ambient air temperature:-5°C~+40°C,average temperature of 24 hours must below+35°C.
3. Relative humidity: The maximum temperature is 40 degrees, and the relative humidity of the air should not exceed 50%.Higher relative humidity can be allowed at lower temperatures. The average minimum temperature in the wettest month must be below 25°C and the maximum relative humidity of the month should not exceed 90%.If the humidity changes because of occasional gel generation, it should be eliminated.
4. Installation position: The installation degree of the tilt and vertical plane should not exceed 5°.
5. In a non-explosive hazardous medium and without enough position in the medium to corrode metals, destroy insulating gases and conductor dust.
6. Where there is rain and snow protection and no steam.
7. Shock vibration: Products should be installed and used without severe shake, shock and vibration of the place.



Technical data

1. Coil rated control power supply voltage Us can be divided into AC 50Hz or 60Hz:36V, 110V, 220V, 380V.
2. Operating condition: Coil pull-in voltage is (85%~110%) Us; Release voltage is(20%~75%)Us.

YCQ7 Magnetic Starter

Table 1

Type	Rated current Ie A	Maximum power duty (kW) AC-3			Matched AC contactor type	Matched thermal relay	Setting current range (A)
		660V	380V	220V			
YCQ7-09	9	5.5	4	2.2	CJX2-D09/CJX2s(CJX2i)-09	JR28-25 JR28se-25	2.5~4, 4~6, 5.5~8
YCQ7-12	12	7.5	5.5	3	CJX2-D12/CJX2s(CJX2i)-12	JR28-25 JR28se-25	7~10, 9~13
YCQ7-18	18	10	7.5	4	CJX2-D18/CJX2s(CJX2i)-18		12~18
YCQ7-25	25	15	11	5.5	CJX2-D25/CJX2s(CJX2i)-25		17~25
YCQ7-32	32	18.5	15	7.5	CJX2-D32/CJX2s(CJX2i)-32		23~32
YCQ7-40	40	18.5	18.5	11	CJX2-D40/CJX2s(CJX2i)-40	JR28-93 JR28se-93	23~32, 30~40 37~50, 48~65 55~70, 63~80 80~93
YCQ7-50	50	22	22	15	CJX2-D50/CJX2s(CJX2i)-50		
YCQ7-65	65	30	30	18.5	CJX2-D65/CJX2s(CJX2i)-65		
YCQ7-80	80	37	37	22	CJX2-D80/CJX2s(CJX2i)-80		
YCQ7-95	95	45	45	25	CJX2-D95/CJX2s(CJX2i)-90		

C

Product features

The starter adopts a protective structure with a protective cover of IP55 and is internally composed of a CJX2 AC contactor and a JR28 thermal overload relay. The entry and exit wiring of the starter adopts the knockout type wiring hole, and the user can selectively knock and connect the four knockout holes according to the wiring requirements. The cover and the base of the starter can be completely separated, and it is very convenient for users to install and maintain; the button adopts the XB2 series push button switch assembly to realize the start and stop of the starter, and it will be safe and reliable.

In order to improve the protective performance of the starter, the starter must be installed vertically. The mounting screws should be selected according to the size of the mounting hole. The screws should not be less than M5, and spring washers, flat washers and sealing rubber rings should be added to ensure the fastening of the starter. In addition, the knockout terminal holes should be equipped with corresponding water-proof terminals.

Overall and mounting dimensions(mm)

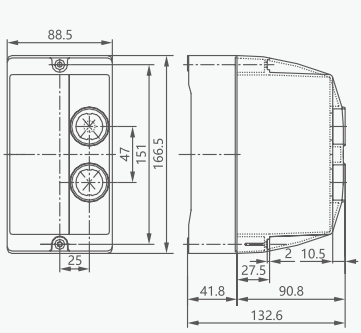

YCQ7-09~18

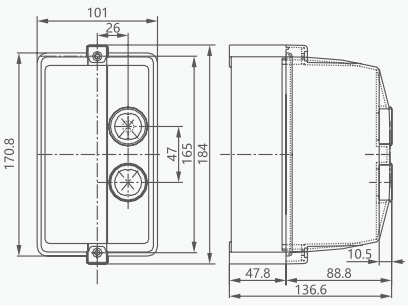

YCQ7-25~32

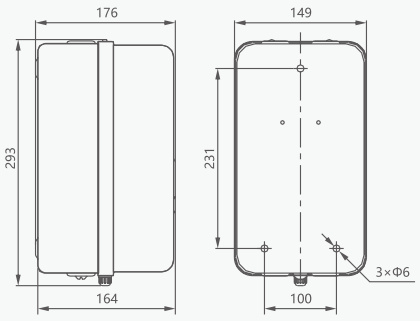

YCQ7-40~95

YCQJ7 Motor Controller



General

YCQJ7 series motor controller (hereinafter referred to as controller) is mainly used in circuits with a frequency of AC 50Hz (or 60Hz), a rated operational voltage of up to 380V and a rated control power of up to 18.5kW (current up to 38A) to control the direct start and stop of water pumps ormotors, provide motors with overload and phase failure protection, and realize automatic liquid level control for civil water towers and reservoirs.This product is not applicable to the liquid level control of low-conductivity liquids, such as oil, purified water ,inflammable and explosive chemical liquids and high-density sewage.

Standards:IEC 60947-4-1.

Type designation

YCQJ 7 - □ □

- Function code
  Blank: without liquid level relay
  W:with liquid level relay
- Rated Working Current
- Design Serial Number
- Model

Operating conditions

1. Altitude: the altitude of the mounting location should not exceed 2000m;
2. Ambient temperature: -5°C~+40°C, and the average temperature in 24h should not exceed +35°C;
3. Atmospheric conditions: The relative air humidity at the mounting location should not exceed 50% at the maximum
4. temperature of +40°C. The relative humidity may be higher at lower temperatures.Special measures should be taken if condensation occurs on the product occasionally due to temperature variation;
5. Pollution degree: 3;
6. Installation category: III;
7. In places where there is no significant vibration or impact;
8. In non-explosive media that do not contain a sufficient amount of gas or dust to cause metal corrosion or insulation failure;
9. In places where rain and snow protection is provided;
10. The inclination from the vertical plane should not exceed 5°

Features

The controller consists of a CJX2s series Ac contactor, a JD-8 series motor comprehensive protector and an YCL8 liquid levelrelay in a protective enclosure and is divided into two types, with liquid level relay and without iquid level relay. Products with iquid levelrelay are used to control the start and stop and automatic pumping and drainage of water pumps and provide and stop and automatic pumping and drainage of water pumps and provide overload and phase failureprotection. Products without liquid level relay are used to control the start and stop of motors and provide overload and phase failureprotection.

Setting of the motor comprehensive protector in the controller is required before it is connected and put into use.

YCQJ7 Motor Controller

Technical data

Main data and technical characteristics

Type	Conventional heating current (A)	Max. rated power (kW) AC-3		Model of matching AC contactor	Model of matching motor protector	Setting current range (A)	Number of turns of protector (turn)
		380V	220V				
YCQJ7 0.72A~2.4A	2.4	1.1	0.55	CJX2s-09	JD-8/0.5A~5A	0.72~2.4	5
YCQJ7-W 0.72A~2.4A							
YCQJ7 3.5A~11A	12	5.5	3	CJX2s-12	JD-8/2A~20A	3.5~11	1
YCQJ7-W 3.5A~11A							
YCQJ7 10A~16A	16	7.5	4	CJX2s-18	JD-8/2A~20A	10~16	1
YCQJ7-W 10A~16A							
YCQJ7 20A~25A	25	11	5.5	CJX2s-25	JD-8/20A~80A	20~25	1
YCQJ7-W 20A~25A							
YCQJ7-W 30A~38A	38	18.5	9	CJX2s-38	JD-8/20A~80A	30~38	1
YCQJ7-W 30A~38A							

1. Rated control supply voltage Us: AC220V, AC380V.
2. Protection degree: IP55.
3. Protection characteristics of the controller.
   - 3.1. Phase failure protection characteristics of the controller: In case of failure of any phase of the three-phase main circuit passing through the center hole of the motor comprehensive protector in the controller, the motor comprehensive protector operates for a period of ≤5s.
   - 3.2. Overload protection characteristics of the controller under balanced three-phase load.

No.	Setting current multiple	Operation time			Starting conditions
1	1.05	No operation within 2h			Cold state start
2	1.2	Operation within 2h			Start after No.1
3	1.5	Tripping class	30	≤12min	Start after applying a 1.0 times setting current for 2h
4	7.2	Tripping class	30	9s<Tp≤30s	Cold state start

4. Down-lead distance of liquid level control electrode: 200m max.
5. Mounting type: installation type.

YCQJ7 Motor Controller

Wiring diagram

a. Connection diagram of YCQJ7-W in case both the control circuit voltage and the main circuit voltage are AC380V

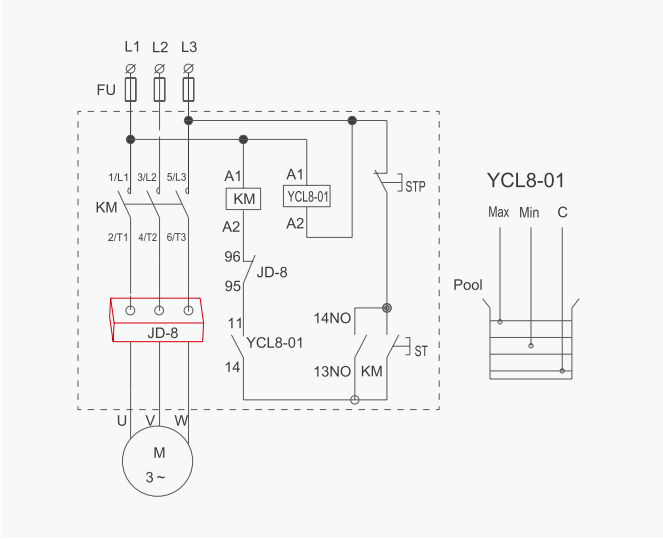

b. Connection diagram of YCQJ7-W in case the main circuit voltage is AC380V and the control circuit voltage is AC220V

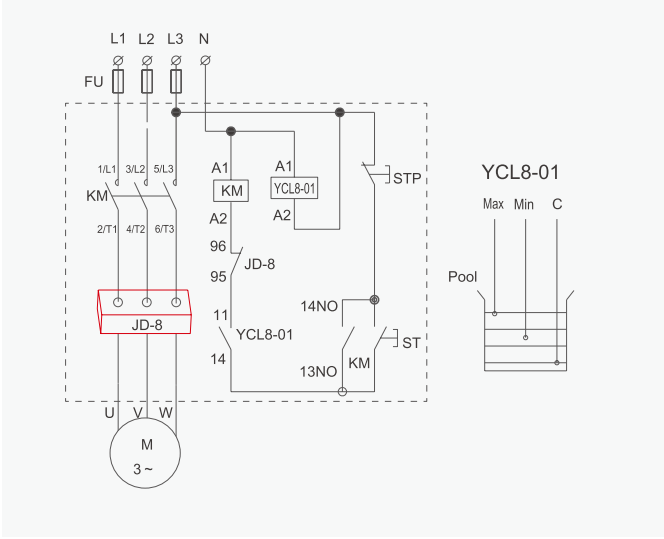

c. Connection diagram of YCQJ7 in case both the control circuit voltage and the main circuit voltage are AC380V

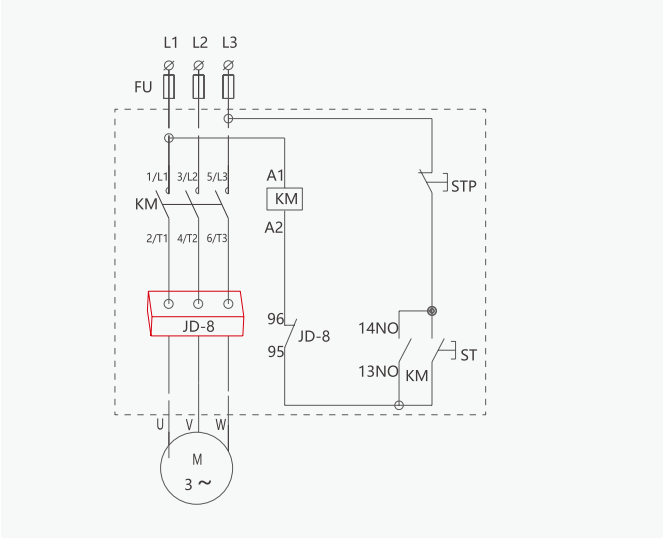

d. Connection diagram of YCQJ7 in case the main circuit voltage is AC380V and the control circuit voltage is AC220V

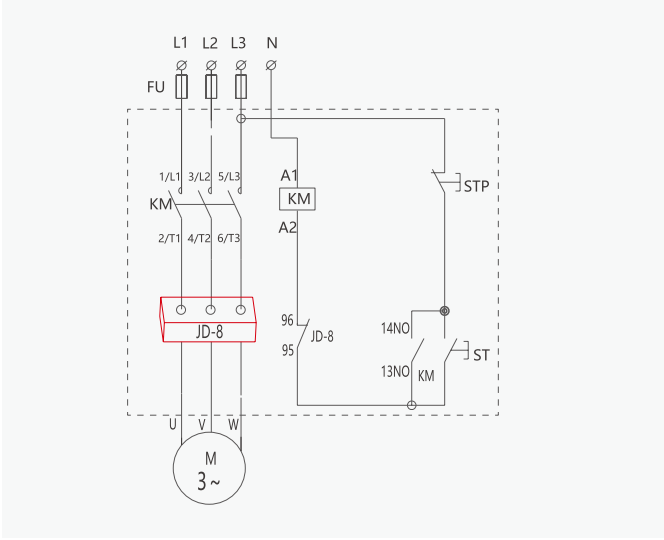

C

YCQJ7 Motor Controller

C

Overall and mounting dimensions(mm)

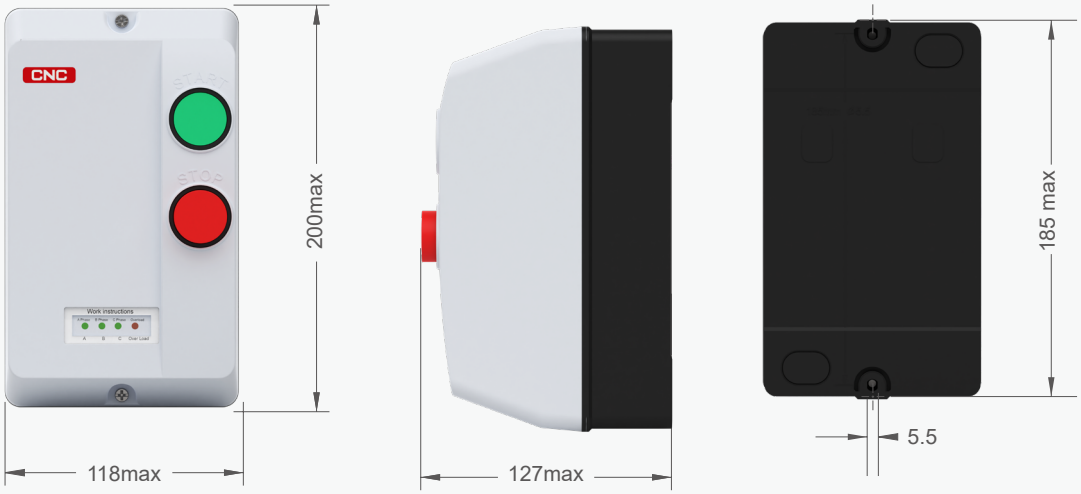

YCQD7 Series Integrated Star Delta Starter

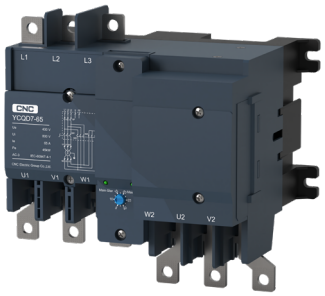

General

The YCQD7 series intelligent integrated star delta starter (hereinafter referred to as the starter) is suitable for three-phase squirrel cage induction motors with AC 50Hz, rated voltage of 380V/400V, and rated working current of up to 265A (phase current when the starter is delta connected), controlling power up to 90kW. It is used to control the start, operation, and stop of the stator winding from star to delta conversion, in order to reduce the impact of starting current and motor starting on the transmission network.

The starter adopts a modular design and integrated structure, integrating contactors, intelligent controllers, and auxiliary contacts. The intelligent controller can automatically control the starter to run according to the predetermined program, thereby completing the star delta starting of the motor.

C

Type designation

YC Q D7 110 □

- Functional module:
  Unmarked (automatic type)
  S (mechanical emergency type)
  Z (Multi functional)
- Shell current: 110A
- Design serial number
- Starter
- Enterprise characteristic code

Technical data

Parameter		Unit	YCQD7-265															
Rated working current:Ie(AC -3)		A	18	25	32	40	50	65	75	85	95	100	110	120	160	185	225	265
Rated working voltage:Ue		V	380V/400V															
Rated insulation voltage:Ui		V	600					800							1000			
Number of poles		P	3															
Mechanical lifespan		ten thousand cycles	600															
Mechanical emergency (manual operation)		second	10000															
Suggest controllable operating power of three-phase squirrel cage motor (AC-3)		kw	11	18.5	22	30	37	45		55		75	90	110	132	160	185	
Supporting fuse body		A	20	32		63	80	100				125		160	200	250	300	
Ability of wiring terminals to connect wires		mm^2	16					35		50				75			150	
Coil parameters	Rated control voltageUs	V	220V/380V															
	pull-in voltage	%Us	80%~110%															
	Release voltage	%Us	20%~75%															
	Coil suction	VA	230															
	Maintain power	VA	19					32						92				

YCQD7 Series Integrated Star Delta Starter

Technical data

Function	Automatic type	Smechanical emergency type	Zmultifunctional
Star Triangle Conversion	■	■	■
Adjustable star running time	■	■	■
Mechanical emergency (manual forced start)	-	■	-
Overload protection	-	-	■
Locked rotor protection	-	-	■
Phase loss protection	-	-	■
Three-phase imbalance protection	-	-	■
Overvoltage protection	-	-	■
Undervoltage protection	-	-	■
Trouble display	-	-	■
Fault alarm	-	-	■
Status display	-	-	■
Communication function	-	-	□

Annotation: - Indicates not possessing, □ Indicating optional options, ■ Indicating standard configuration

Normal working and installation conditions

The altitude of the installation site shall not exceed 2000m.

The upper limit value of the normal operating environment temperature shall not exceed +40 °C, the lower limit value shall not be lowerthan -5 °C, and the average temperature value within 24 hours shall not exceed+35 °C; When the ambient temperature exceeds the range, users need to negotiate with the manufacturer.

Vertically installed starters have power terminals facing upwards and load terminals facing downwards; The inclination angle between the installation surface and the vertical surface of all starters shall not exceed ± 5 °, which does not affect their performance.

No abnormal vibration or impact.

Pollution level: Level 3.

Fixation method: screw installation.

Structural features and working principles

Star Delta Start: When the control coil is energized with a 220V control voltage, the main contactor of the product closes, forming a star circuit with the star contactor. The motor starts running at reduced voltage. When the operating time reaches the set switching time and the motor speed approaches normal speed, the main contactor automatically disconnects and then simultaneously closes with the angle contactor, forming a triangular circuit, and the motor runs at full voltage.

Mechanical emergency: When the signal line or the control line of the fire pump control box malfunctions, making it impossible to automatically or manually start the fire pump, the mechanical emergency start device on the fire pump control box door can be used to manually close the main and corner contactors of the fire pump to start the fire water pump.

YCQD7 Series Integrated Star Delta Starter

Appearance and installation dimensions

Automatic Star Delta Starters

YCQD7-110 65A, 75A, 85A, 95A automatic models(S)

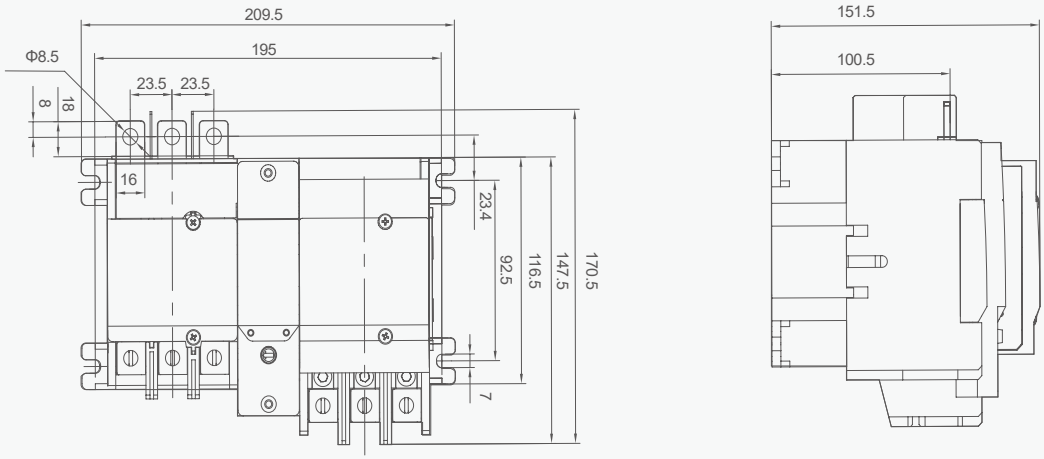

YCQD7-110 100A, 110A automatic type(S)

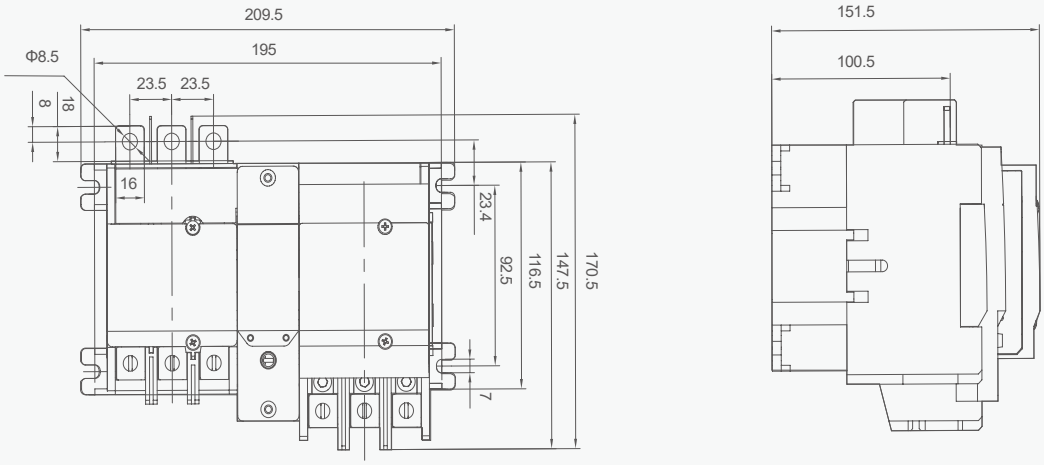

C

YCQD7 Series Integrated Star Delta Starter

C

Mechanical emergency star delta starter

YCQD7-110 65A, 75A, 85A, 95A mechanical emergency type(Z)

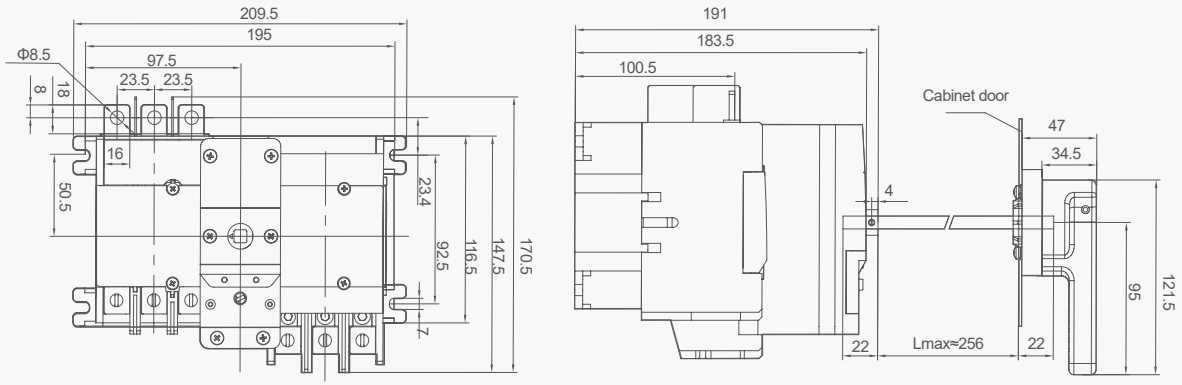

(Handle A with padlock function)

Number	External dimensionstype	Handle length
1	Handle A with padlock function	L=122mm
2	Handle B with padlock function	L=152mm
3	Equipped with lock function C	L=140mm

YCQD7-110 100A, 110A mechanical emergency type

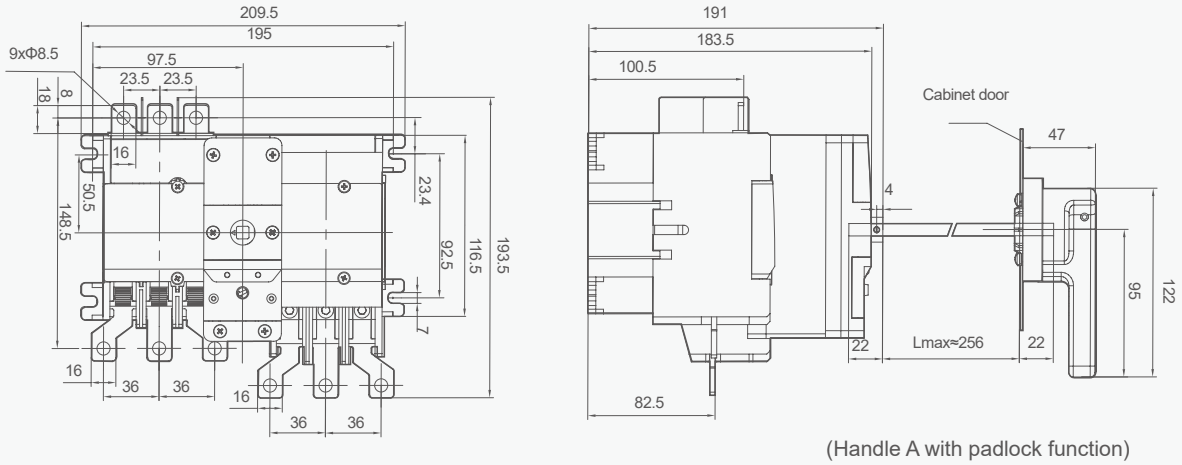

(Handle A with padlock function)

YCQD7 Series Integrated Star Delta Starter

Opening diagram of handle A and B with padlock function

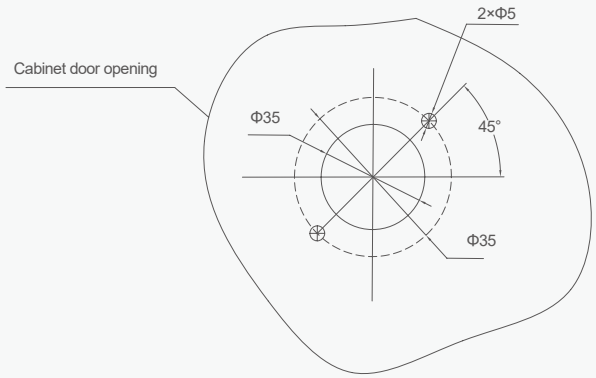

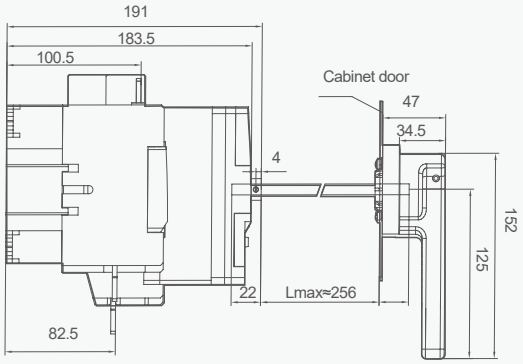

(Handle B with padlock function)

YCQD7-110 65A, 75A, 85A, 95A mechanical emergency type

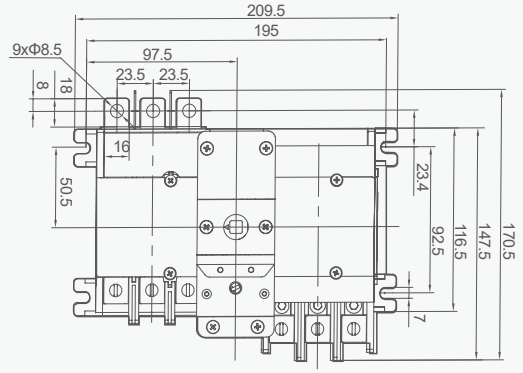

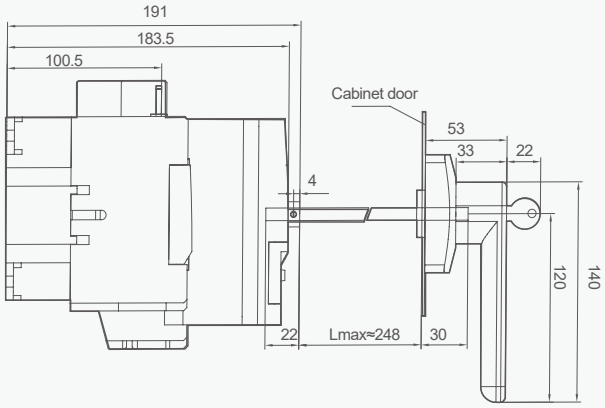

(Equipped with lock function handle C)

YCQD7-110 100A, 110A mechanical emergency type

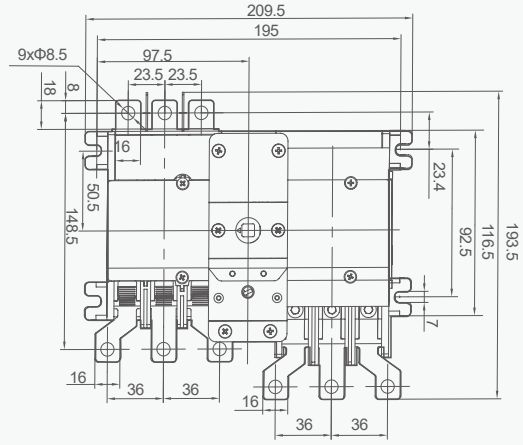

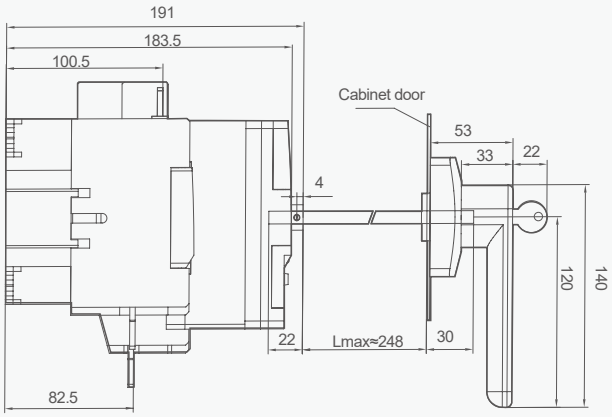

(Equipped with lock function handle C)

YCQD7 Series Integrated Star Delta Starter

Opening diagram of handle C with built-in lock function

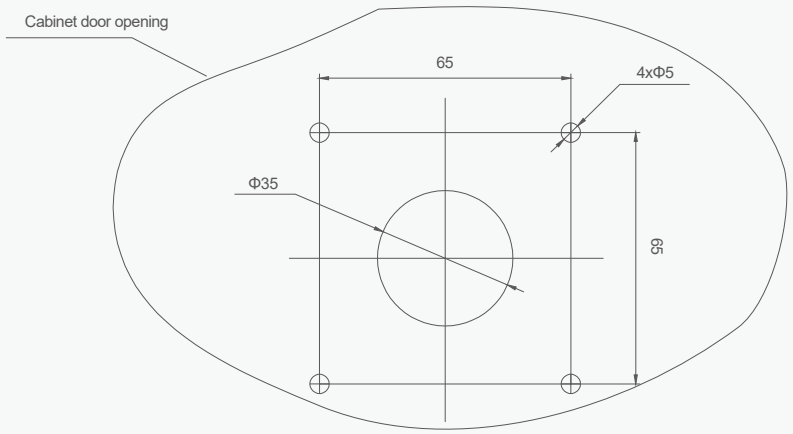

YCQD7 multifunctional model

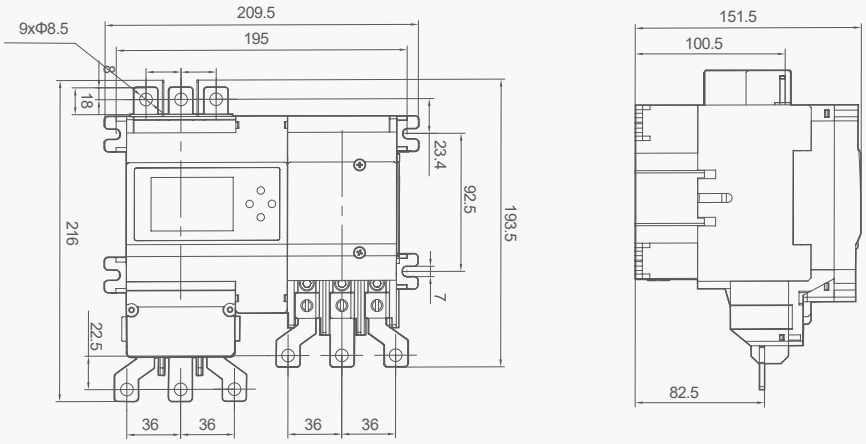

YCP5 Series

Motor Starter



Waterproof Box Without Button
YCP5-25-MC



YCP5



YCP5-25-MC01

- **YCP5-25 With waterproof box: IP55**

CNC
ELECTRIC

YCP5 Motor Starter



General

YCP5 series AC Motor Starter is suitable for circuits whose alternating voltage is up to 690V, current up to 80A. The product works to control the overload, phase loss, short circuit protection and infrequent starts of a three-phase squirrel cage asynchronous motor. The Motor Starter can protect the distributing line for infrequent load transfer, and it can also works as an isolator.

Operating conditions

1. Installation altitude≤2000m
2. Ambient air temperature -5°C ~+40°C average temperature of 24 hours must be below +35°C
3. Relative humidity below 90% when the temperature is +25°C±5°C
4. Ambient pollution level: 3
5. Installation category of the starter: III

Acting characteristic of each phase in distribution circuit breaker in the load balanced condition

No.	Multiple of setting current	Acting time	Initial state	Ambient air temperature
1	1.0In	≤2h non-tripping	Cold state	+40°C±2°C
2	1.2In	≤2h tripping	Start after 1	+40°C±2°C

Technical data

Rated insulation voltage Ui(V):690;

Rated work voltage Ue(V):230/240,400/415,440,550,690;

Rated frequency Hz:5 0/60;

The grade rated current of shell Inm(A): 80;

The rated voltage of disjointer In(A);

The adjusting range of commuting current(A);

The cutting capacity for rated limit short circuit Icu(kA);

The cutting capacity for rated work short circuit Ics(kA);

The bearable voltage for rated shock Uimp(V): 600;

Electrical life AC-3: 2000;

Mechanical life: 10000.

Table 1

The adjusting range of commuting current	The cutting capacity for rated limit short circuit Icu,the cutting capacity for rated work short circuit Ics							
	230/240V		415V		500V		660V	
	Icu(kA)	Ics, %Icu(kA)	Icu(kA)	Ics, %Icu(kA)	Icu(kA)	Ics, %Icu(kA)	Icu(kA)	Ics, %Icu(kA)
YCP5-25								
0.1-0.16	100	100	100	100	100	100	——	——
0.16-0.25	100	100	100	100	100	100	——	——
0.25-0.4	100	100	100	100	100	100	——	——
0.4-0.63	100	100	100	100	100	100	——	——
0.63-1	100	100	100	100	100	100	——	——
1-1.6	100	100	100	100	100	100	——	——
1.6-2.5	100	100	100	100	100	100	3	75
2.5-4	100	100	100	100	100	100	3	75
4-6.3	100	100	100	100	50	100	3	75
6-10	100	100	100	100	10	100	3	75
9-14	100	100	15	50	6	75	3	75
13-18	100	100	15	50	6	75	3	75
17-23	50	50	15	50	4	75	3	75
20-25	50	50	15	50	4	75	3	75
24-32	50	50	10	50	4	75	3	75
YCP5-80								
6-10	/	/	100	50	8	100	4	100
10-16	/	/	100	50	8	100	4	100
14-20	/	/	100	50	8	100	4	100
16-25	/	/	100	50	8	100	4	100
25-40	/	/	35	50	8	75	4	75
40-63	/	/	35	50	8	75	4	75
56-80	/	/	15	50	4	100	2	100

YCP5 Motor Starter

Protection properties

Over-load Protection Properties

Series No.	Multip le of setting current	Initial status	Time		Expected results	Ambient temperature
1	1.05	Cold status	t≥2h		Non-tripping	+20°C±2°C
2	1.20	Heat status (right after test.1)	t<2h		Tripping	+20°C±2°C
3	1.50	Heat status (right after test.1)	Tripping class	10A t<2min 10 t<4min	Tripping	+20°C±2°C
4	7.20	Cold status	Tripping class	10A 2s<t≤10s 10 4s<t≤10s	Trippin	+20°C±2°C

C

Phase failure protection properties

Series No.	Multiple of setting current		Initial status	Time	Expected results	Ambient temperature
	Any 2 phase	The other phase				
1	1.0	0.9	Cold status	t≥2h	Non-tripping	+20°C±2°C
2	1.15	0	Heat status (right after test.1)	t<2h	Trippin	+20°C±2°C

Overall and mounting dimensions(mm)

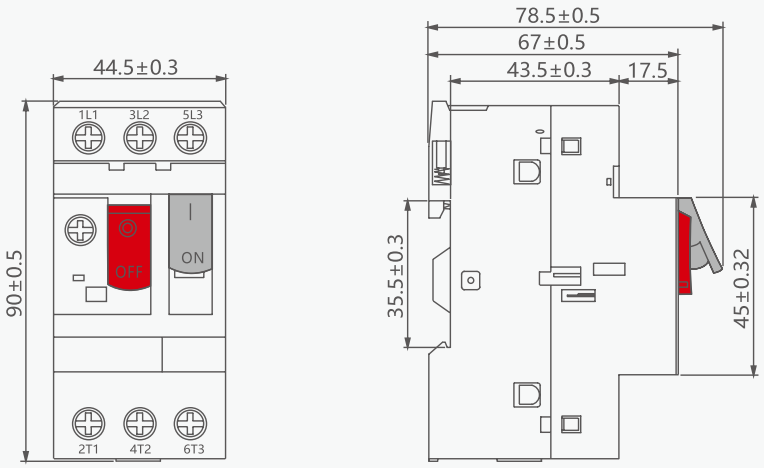

YCP5-25

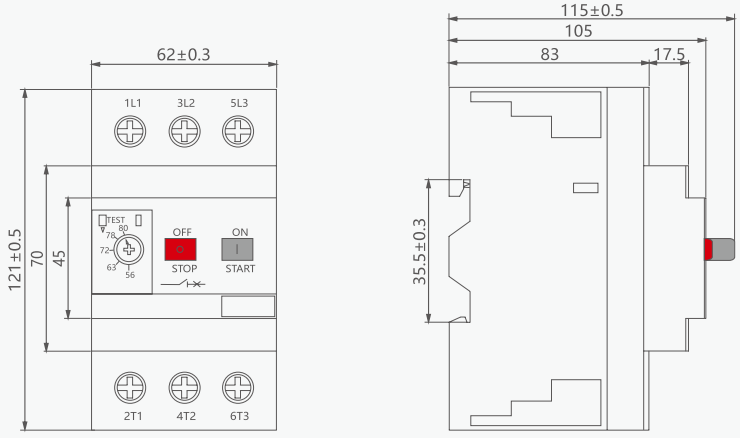

YCP5-80

YCP5 Motor Starter

Table 2

Type	Standard power ratings of 3-phase molors 50/60Hz in category AC-3						Current setting range
	220V	380V	415V	440V	500V	660V	
	kW	kW	kW	kW	kW	kW	
YCP5-25-ME01	-	-	-	-	-	-	0.1-0.16
YCP5-25-ME02	-	-	-	-	-	-	0.16-0.25
YCP5-25-ME03	-	-	-	-	-	-	0.25-0.4
YCP5-25-ME04	-	-	-	-	-	0.37	0.4-0.63
YCP5-25-ME05	-	-	-	0.37	0.37	0.55	0.63-1
YCP5-25-ME06	-	0.37	-	0.55	0.75	1.1	1-1.6
YCP5-25-ME07	0.37	0.75	0.75	1.1	1.1	1.5	1.6-2.5
YCP5-25-ME08	0.75	1.5	1.5	1.5	2.2	3	2.5-4
YCP5-25-ME10	1.1	2.2	2.2	3	3.7	4	4-6.3
YCP5-25-ME14	2.2	4	4	4	5.5	7.5	6-10
YCP5-25-ME16	3	5.5	5.5	7.5	7.5	9	9-14
YCP5-25-ME20	4	7.5	9	9	9	11	13-18
YCP5-25-ME21	5.5	11	11	11	11	15	17-23
YCP5-25-ME22	5.5	11	11	11	15	18.5	20-25
YCP5-25-ME32	7.5	15	15	15	18.5	26	24-32
YCP5-80-ME10	1.1	2.2	2.2	3	3.7	4	6-10
YCP5-80-ME16	2.2	4	4	4	5.5	7.5	10-16
YCP5-80-ME20	4	7.5	7.5	7.5	10	11	14-20
YCP5-80-ME25	5.5	11	11	11	15	18.5	16-25
YCP5-80-ME40	11	18.5	22	22	25	33	25-40
YCP5-80-ME63	15	30	33	33	40	55	40-63
YCP5-80-ME80	22	40	45	45	55	63	56-80

YCP5 Motor Starter

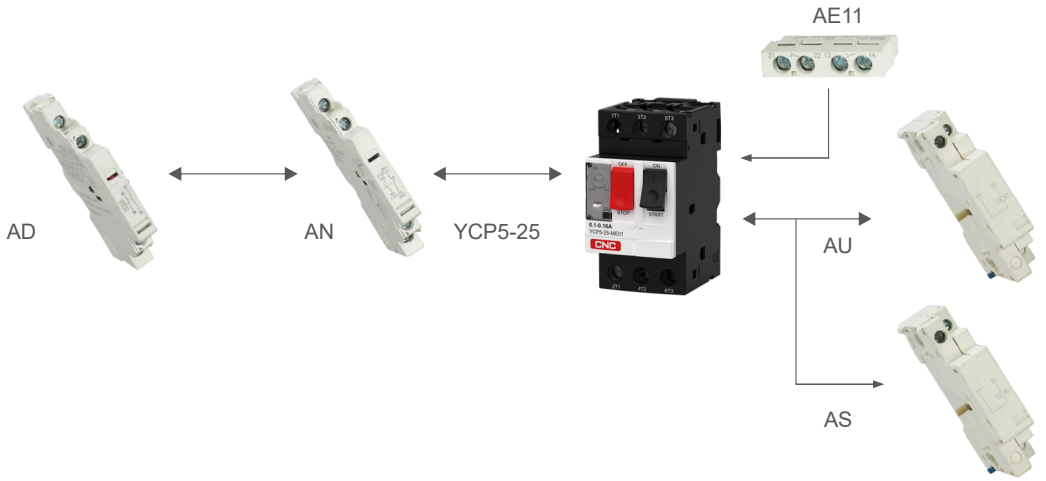

YCP5-25 Accessories

Table 3

Names of accessories	Code	Ae11		Installation place
Instantaneous auxiliary contacts	AE11	1NO+NC		The front of breaker (1PCS can be installed)
	AE20	2NO		
	AN11	1NO+1NC		The left of breaker (2PCS can be installed)
	AN20	2NO		
Fault signal contact + Instantaneous auxiliary contacts	AD1010	Fault signal contact NO	NO	
	AD1001		NC	
	AD0110	Fault signal contact NC	NO	
	AD0101		NC	

Table 4

Names of accessories	Code	Ae11	Installation place
Under voltage release	AU115	100-127V 50Hz	The right of breaker (1 PCS can be installed)
	AU225	220-240V 50Hz	
	AU385	380-415V 50Hz	
Shunt release	AS115	100-127V 50Hz	
	AS225	220-240V 50Hz	
	AS385	380-415V 50Hz	

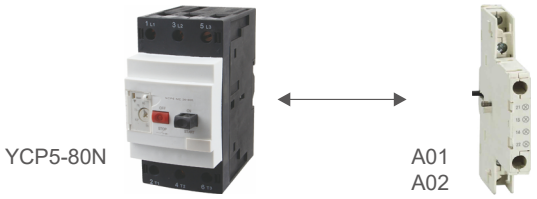

YCP5-80 Accessories

Table 5

Names of accessories	Code	The type of contacts	Installation place
Instantaneous auxiliary contacts	A01	1NO+1NC	The right of breaker (1 PCS can be installed)
	A02	2NO	

YCP6 Motor Starter



YCP6-32P



YCP6-80P

General

YCP6 series Motor protection circuit breaker (also known as: Motor Protector or Motor starter, hereinafter referred to as “circuit breaker”)is suitable for AC voltage to 690V, the highest current to 80A circuit, is a circuit breaker integrating the functions of isolation switch, circuit breaker and thermal relay with isolation protection, overload protection, temperature compensation, phase failure protection, short circuit protection. Application range: three-phase mouse cage asynchronous motor direct start and control, distribution line protection and infrequent load conversion.

Standard: IEC60947-2, 60947-4-1.

Type designation

Model		Frame current	Operating method	Rated current
YCP6	-	32	P	0.16
Motor Circuit Breaker		32:32A 80:80A	P: Knob operation	32A: 0.16 0.25 0.4 0.63 1 1.6 2.5 4 6.3 10 14 18 23 25 32 80A: 25 32 40 50 65 73 80

Operating Conditions

1. The altitude of the installation site is generally not more than 2000m.
2. The lower limit of ambient air temperature is generally not lower than -5°C, and the upper limit is generally not higher than +40°C.
3. The relative humidity of the air is not more than 50% when the temperature is +40°C, and the minimum monthly temperature of the wettest month is 25°C, and the monthly average maximum relative humidity is not more than 90%.
4. The surrounding environment pollution level is 3.
5. Starter installation categories are III.
6. The inclination of the mountion surface and the vertical plane is not more than ±5°.
7. Rated working system: uninterrupted working system, intermittent working system.

YCP6 Motor Starter

Technical data

1. Rated insulation voltage Ui(V): 690
2. Rated impulse withstand voltage Uimp(kV): 8
3. Rated operating voltage Ue(V): 230/240, 400/415, 440, 500, 690
4. Rated frequency(Hz): 50, 60
5. Frame rated current Inm(A): 80A
6. Rated current In(A): see Table 1

Hot component setting current adjustment range: rated limit and rated operating short-circuit breaking capacity see Table 1.

Table 1.

Model	Rated currentIn (A)	Setting current adjustment range (A)	Rated ultimate short-circuit breaking capacity ICU, rated operating short-circuit breaking capacity ICS (KA)								Flashover distance (mm)
			Standard Breaking Capacity				High Breaking Capacity				
			400/415V		690V		400/415V		690V		
			ICU	ICS	ICU	ICS	ICU	ICS	ICU	ICS	
YCP6-32P-0.16	0.16	0.1-0.16	100	100	100	100	100	100	100	100	40
YCP6-32P-0.25	0.25	0.16-0.25	100	100	100	100	100	100	100	100	40
YCP6-32P-0.4	0.4	0.25-0.4	100	100	100	100	100	100	100	100	40
YCP6-32P-0.63	0.63	0.4-0.63	100	100	100	100	100	100	100	100	40
YCP6-32P-1	1	0.63-1	100	100	100	100	100	100	100	100	40
YCP6-32P-1.6	1.6	1-1.6	100	100	100	100	100	100	100	100	40
YCP6-32P-2.5	2.5	1.6-2.5	100	100	3	2.25	100	100	8	8	40
YCP6-32P-4	4	2.5-4	100	100	3	2.25	100	100	8	8	40
YCP6-32P-6.3	6.3	4-6.3	100	100	3	2.25	100	100	6	6	40
YCP6-32P-10	10	6-10	100	100	3	2.25	100	100	6	6	40
YCP6-32P-14	14	9-14	15	7.5	3	2.25	100	100	6	6	40
YCP6-32P-18	18	13-18	15	7.5	3	2.25	50	25	4	4	40
YCP6-32P-23	23	17-23	15	6	3	2.25	50	25	4	4	40
YCP6-32P-25	25	20-25	15	6	3	2.25	50	25	4	4	40
YCP6-32P-32	32	24-32	10	6	3	2.25	50	25	4	4	40
YCP6-80P-25	25	17-25	/	/	/	/	100	100	6	3	50
YCP6-80P-32	32	23-32	/	/	/	/	100	100	6	3	50
YCP6-80P-40	40	30-40	/	/	/	/	50	50	6	3	50
YCP6-80P-50	50	37-50	/	/	/	/	50	50	6	3	50
YCP6-80P-65	65	48-65	/	/	/	/	50	50	6	3	50
YCP6-80P-73	73	62-73	/	/	/	/	50	30	6	3	50
YCP6-80P-80	80	70-80	/	/	/	/	50	30	6	3	50

Table 2.

Type	Standard power ratings of 3-phase molors 50/60Hz in category AC-3						Current setting range
	230/240V	400V	415V	440V	500V	690V	
	kW	kW	kW	kW	kW	kW	
YCP6-32P-0.16	-	-	-	-	-	-	0.1-0.16
YCP6-32P-0.25	-	-	-	-	-	-	0.16-0.25
YCP6-32P-0.4	-	-	-	-	-	-	0.25-0.4
YCP6-32P-0.63	-	-	-	-	-	0.37	0.4-0.63
YCP6-32P-1	-	-	-	0.37	0.37	0.55	0.63-1
YCP6-32P-1.6	-	0.37	-	0.55	0.75	1.1	1-1.6
YCP6-32P-2.5	0.37	0.75	0.75	1.1	1.1	1.5	1.6-2.5
YCP6-32P-4	0.75	1.5	1.5	1.5	2.2	3	2.5-4
YCP6-32P-6.3	1.1	2.2	2.2	3	3.7	4	4-6.3
YCP6-32P-10	2.2	4	4	4	5.5	7.5	6-10
YCP6-32P-14	3	5.5	5.5	7.5	7.5	9	9-14
YCP6-32P-18	4	7.5	9	9	9	11	13-18
YCP6-32P-23	5.5	11	11	11	11	15	17-23
YCP6-32P-25	5.5	11	11	11	15	18.5	20-25
YCP6-32P-32	7.5	15	15	15	18.5	25	24-32
YCP6-80P-25	5.5	11	11	11	15	18.5	17-25
YCP6-80P-32	7.5	15	15	15	18.5	22	23-32
YCP6-80P-40	/	18.5	18.5	/	/	30	30-40
YCP6-80P-50	/	30	30	/	/	45	37-50
YCP6-80P-65	/	30	30	/	/	45	48-65
YCP6-80P-73	/	37	37	/	/	55	62-73
YCP6-80P-80	/	37	37	/	/	55	70-80

The enclosure protection class is IP20.

The enclosure protection class is IP20.
The operating performance of the circuit breaker is shown in Table 3.

Table 3.

Type	Frame size rated current Inm	Hourly operation cycles	Operation cycle number	
			Electrical life	Mechanical life
YCP6-32P	32	120	10000	100000
YCP6-80P	80	120	10000	20000

C

Overcurrent action protection

See Table 4, Table 5, and Table 6 for the action characteristics of the circuit breaker when each phase is balanced and unbalanced.

Table 4 Operating characteristics of the circuit breaker when the phases are balanced (Distribution protection)

Type	Distribution breaker			Circumstance temperature
	Setting current multiple	Tripping time	Status	
YCP6-32P YCP6-80P	1.05	1h non-tripping	Initial	+20°C±2°C
	1.3	1h tripping	Following serial 1	
	1.5	< 2min tripping		

Table 5 Action characteristics of balanced load of each phase of the circuit breaker (Motor protection)

Type	Distribution breaker			Circumstance temperature
	Setting current multiple	Tripping time	Status	
YCP6-32P YCP6-80P	1.05	2h non-tripping	Initial	+20°C±2°C
	1.2	2h tripping	Following serial 1	
	1.5	Action within 2 minutes		
	7.2	2~10s 2h tripping	Initial	

Table 6 The action characteristics of the circuit breaker when the load is unbalanced (phase break)

Type	Setting current multiple		Status	Specified time	Expected results	Circumstance temperature
	Any two-phase	Third phase				
YCP6-32P YCP6-80P	1.0	0.9	Cold state	t ≥ 2h	non-tripping	+20°C±2°C
	1.15	0	Thermal state (In immediate order 1.)	t ≤ 2h	tripping	

Table 7 The instantaneous electromagnetic buckle action characteristics of short circuit device are shown

Type	Test current	Start status	Specified time	Expected results	Circumstance temperature
YCP6-32P YCP6-80P	0.8×12×In	Cold state	t ≥ 0.2s	non-tripping	+20°C ± 5°C
	1.2×12×In	Cold state	t ≤ 0.2s	tripping	+20°C ± 5°C

YCP6 Motor Starter

Accessories

Attachment Name	YCP6-32P/YCP6-80P	Accessory Specifications	
Undervoltage release	YCP6-AU115	110~150V, 50Hz; 127V, 50Hz	
	YCP6-32P AU225	220~240V, 50Hz	
	YCP6-32P AU385	380~400V, 50Hz; 400V, 60Hz	
Shunt release	YCP6-32P AS115	110~150V, 50Hz; 127V, 60Hz	
	YCP6-32P AS225	220~240V, 50Hz	
	YCP6-32P AS385	380~400V, 50Hz; 440V, 60Hz	
Instantaneous auxiliary contacts (front hanging)	YCP6-32P AE20	2NO	
	YCP6-32P AE11	1NO+1NC	
Instantaneous auxiliary contacts (side hanging)	YCP6-32P AN20	2NO	
	YCP6-32P AN11	1NO+1NC	
Fault signal contacts and instantaneous auxiliary contacts	YCP6-32P AD1010	Fault signal contact NO	NO
	YCP6-32P AD1001		NC
	YCP6-32P AD0110	Fault signal contact NC	NO
	YCP6-32P AD0101		NC



Undervoltage release

Performance of the YCP6-32 AU115, AU225, AU385 of the Undervoltage stripper: Rated insulated voltage Ui (V): 690.

Motion Characteristics:
When the voltage drops to the range of 70% and 35% of the rated voltage, the undervoltage stripper shall act;
The Undervoltage stripper shall be able to prevent the starter from closing when the supply voltage is less than 35% of the rated voltage of the stripper, and the undervoltage stripper shall be able to ensure the closure of the starter when the supply voltage is equal to or greater than 85% of the rated voltage



Shunt release

Performance of the YCP6-32 AS115, AS225, AS385 of the shunt release.
Rated insulated voltage Ui (V): 690

Action characteristics:
The operating voltage range of the shunt release stripper is 70%~110% of the rated operating voltage.



Upper auxiliary
AE-11,AE-20

Performance of instantaneous auxiliary contact YCP6-32 AE20, AE11 (front hanging):
Rated insulated voltage Ui (V): 250;
Agreed heating current Ith (A): 2.5;
The use category of instantaneous auxiliary contacts, rated operating voltage and rated operating current are shown in the table below.

YCP6 Motor Starter

Working with categories	AC-15				DC-13		
Rated operating voltage Ue (V)	24	48	110/127	230/240	24	48	60
Rated operating current Ie (A)	2	1.25	1	0.5	1	0.3	0.15
Normal working power P (W)	48	60	127	120	24	15	9

The abnormal connection and breaking ability of fault signal contacts and instantaneous auxiliary contacts are shown in the following table

Working with categories	Connected			Division			Number of cycles and operating frequencies of the pass- through operation		
	I/Ie	U/UE	cosΦ or T0.95	I/Ie	U/UE	cosΦ or T0.95	Number of Operation Loops	Number of operation cycles per minute	Electrified time
AC-14	24	48	48	6	1.1	0.7	24	48	60
AC-15	2	1.25	1.25	10	1.1	0.3	1	0.3	0.15
DC-13	48	60	60	1.1	1.1	6Pe	24	15	9

YCP6-32P Knob type product extension handle

	Attachment Type	Function
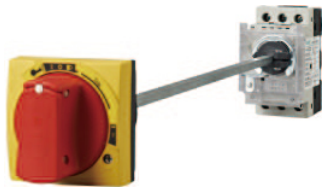	AP02	off position locked with padlock, IP54
	AP02	off position locked with padlock, IP54

Overall and mounting dimensions(mm)

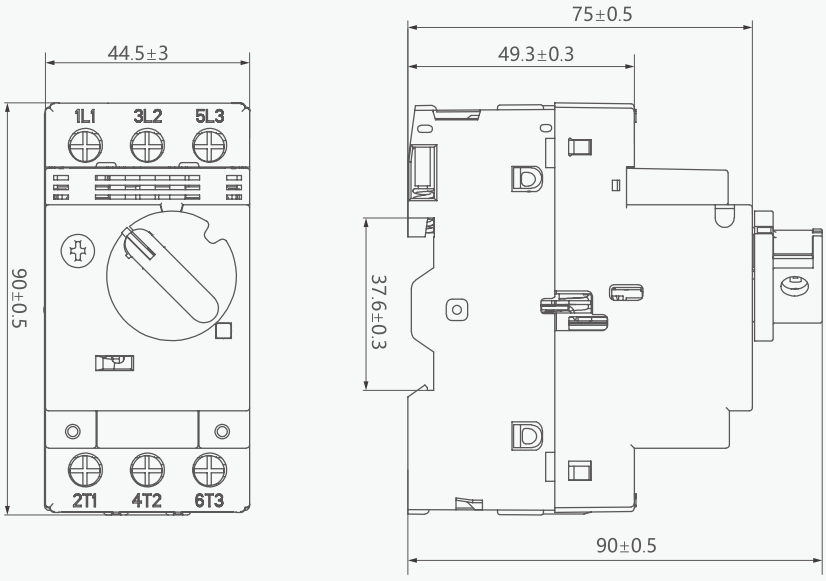

YCP6-32P

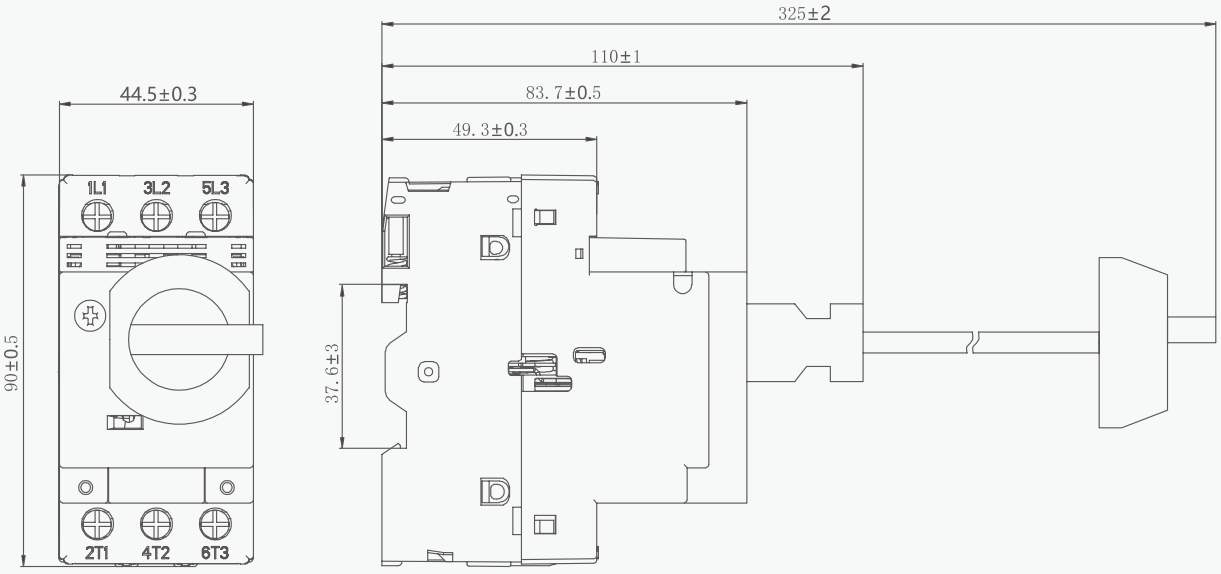

YCP6-32P

C

YCP6 Motor Starter

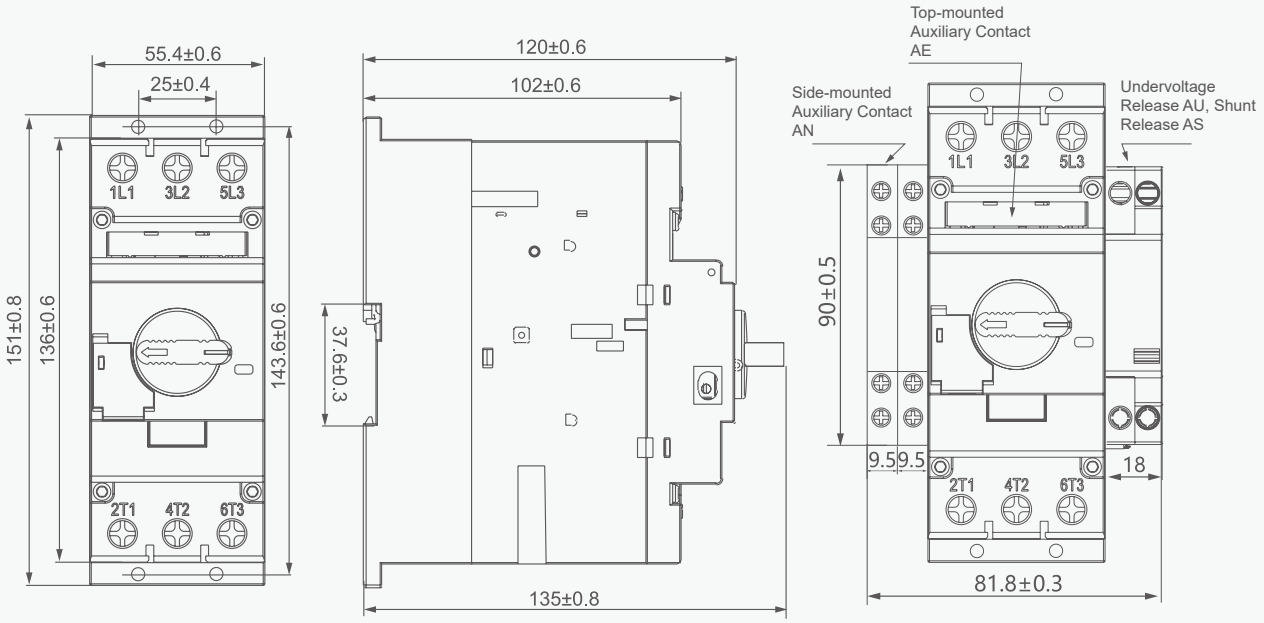

YCP6-80P

YCB600 Series Vector



General

An inverter is an electronic device used to control the speed of a motor. It achieves precise control of motor speed by changing the voltage and frequency that the motor receives.

Variable frequency drives are widely used in industrial applications for precise control of motor speeds, such as in fans, pumps, compressors, etc.

Operating condition

1. Ambient temperature: -10°C~+45°C
2. Relative humidity: ≤20% at 40°C; ≤90% at 20°C
3. Altitude: ≤2000m
4. Environmental conditions: no harmful gases and vapors, no conductive or explosive dust, no severe mechanical vibration

Type designation

YC B 600 2 S 0004G

- 0004G:0.4kW, 0007G:0.75kW, 0015G:1.5kW, 0022G:2.2kW, 0022G:2.2kW, 0030G:3kW, 0040G:4kW, 0055G:5.5kW, 0075G:7.5kW, 0110G:11kW
- S:Single-Phase T:Three-Phase
- 2:220V 4:380V
- Design number
- Frequency converter
- CNC

C

YCB600 Series Vector

Technical data

Inverter Model (A: Economy Type)	Input Voltage(V)	Rated OutputCurrent (A)	Adaptive motorPower (kw)
YCB600-2S0004G	220-240	2.4	0.4
YCB600-2S0007G	220-240	4.5	0.75
YCB600-2S0015G	220-240	7.0	1.5
YCB600-2S0022G	220-240	10.0	2.2
YCB600-2S0030G	220-240	11.0	3.0
YCB600-4T0007G	360-440	2.1	0.75
YCB600-4T0015G	360-440	3.7	1.5
YCB600-4T0022G	360-440	5.0	2.2
YCB600-4T0030G	360-440	7.0	3.0
YCB600-4T0040G	360-440	9.0	4.0
YCB600-4T0055G	360-440	13.0	5.5
YCB600-4T0075G	360-440	17.0	7.5
YCB600-4T0110G	360-440	25.0	11.0

Technical Indications

Item		Item Description
Input	Rated voltage & Frequency	Single-phase/3 Phase 200-240VAC,3 Phase 360-440VAC,50/60Hz
	Allowable voltage working range	Voltage fluctuation range:±10% Voltage unbalance rate:<3%,Frequency fluctuation:≤5%
Ouput	Rated voltage Frequency	3 Phase 0~Input voltage VAC
		0.0~600Hz
	Overload capacity	110% long-term,150% 1 minute,180% 5seconds
Control your performance	Control mode	V/F control,Simple vector control,Advanced vector control Torque contro
	Frequency resolution	Digital setting:0.1Hz Analog setting:Maximum frequency×0.1%
	Frequency accuracy	Digital setting:0.1Hz Analog setting:within 0.2%of the maximum output frequency
	V/F Voltage frequency characteristic	Three modes:the first is a linear torque characteristic curve, the second is a square torque characteristiccurve,and the third is a user-set V/F curve.
	Automatic limit current and limit voltage	No matter in the process of acceleration,deceleration or stable operation,it will automatically detect the motor stator current and voltage,and suppress it within the allowable range according to the unique algorithm,minimizing the possibility of system fault tripping.
	Vector voltage-frequency characteristics	Automatically adjust output voltage-frequency ratio according to motor parameters and uniquealgorithm.
	Torque characteristics	Starting torque: 100% rated torque at 5.0Hz(VF control) 150% rated torque at 1.0Hz(vectorcontrol)
	Current and suppression	Full current closed-loop control,completely avoid current impact,with perfect overcurrent and overvoltage suppression function

YCB600 Series Vector

Technical Indications(continued)

Item		Item Description
Control your performance	Under voltage suppression during operation	Especially for users with low grid voltage and frequent grid voltage fluctuations, even if the voltage is lower than the allowable range, the system can maintain the longest possible running time according to the unique algorithm and residual energy allocation strategy
	Slip compensation	Setting range:0~100%,can automatically adjust the output frequency of the inverter according to the motor load, and reduce the rotation speed change of the motor caused by the load change
	Carrier frequency	2.0~20.0KHz
	Automatic voltage regulation operation	Dynamic voltage stabilization, static voltage stabilization, and no voltage stabilization can be selected according to the need to obtain the most stable operation effect.
	Built-in PID	It can easily constitute a closed-loop control system, suitable for process control such as pressure control and flow control
Running	Acceleration and deceleration time	0.1~999.9s Continuous can be set
	Running command	Operation panel control, external terminal control, serial communication control
	Frequency setting	Panel potentiometer setting, panel key setting, external control terminal increase/ decrease setting, analog voltage or current signal setting,terminal combination setting, serial communication setting, etc.
	Output signal	One programmable relay output, one analog output
Brake	Energy braking	Energy braking initial start voltage,return voltage andenergy braking rate are continuously adjustable
	DC braking	Start and stop can be selected separately, action frequency 0.0~upper limit frequency, action current level 0~50%, action time 0~30s, continuous can be set
Other functions		Frequency upper and lower limit, reverse running limit, jog function, counter, skip frequency operation, instantaneous power failure restart, fault automatic reset, etc.
Protection function		Overcurrent,overload, overvoltage, undervoltage, overheating,short circuit, etc.
LED Display		Can display the real-time of inverter running status, monitoring parameters,function parameters,fault codes and other information
Optional Parts		Brake components, remote operation panel and connecting cable
Structure	Cooling method	Forced air cooling
	Installation method	Wall-mounted, rail-mounted

C

Wiring diagram

Basic Wiring Diagram of Inverter

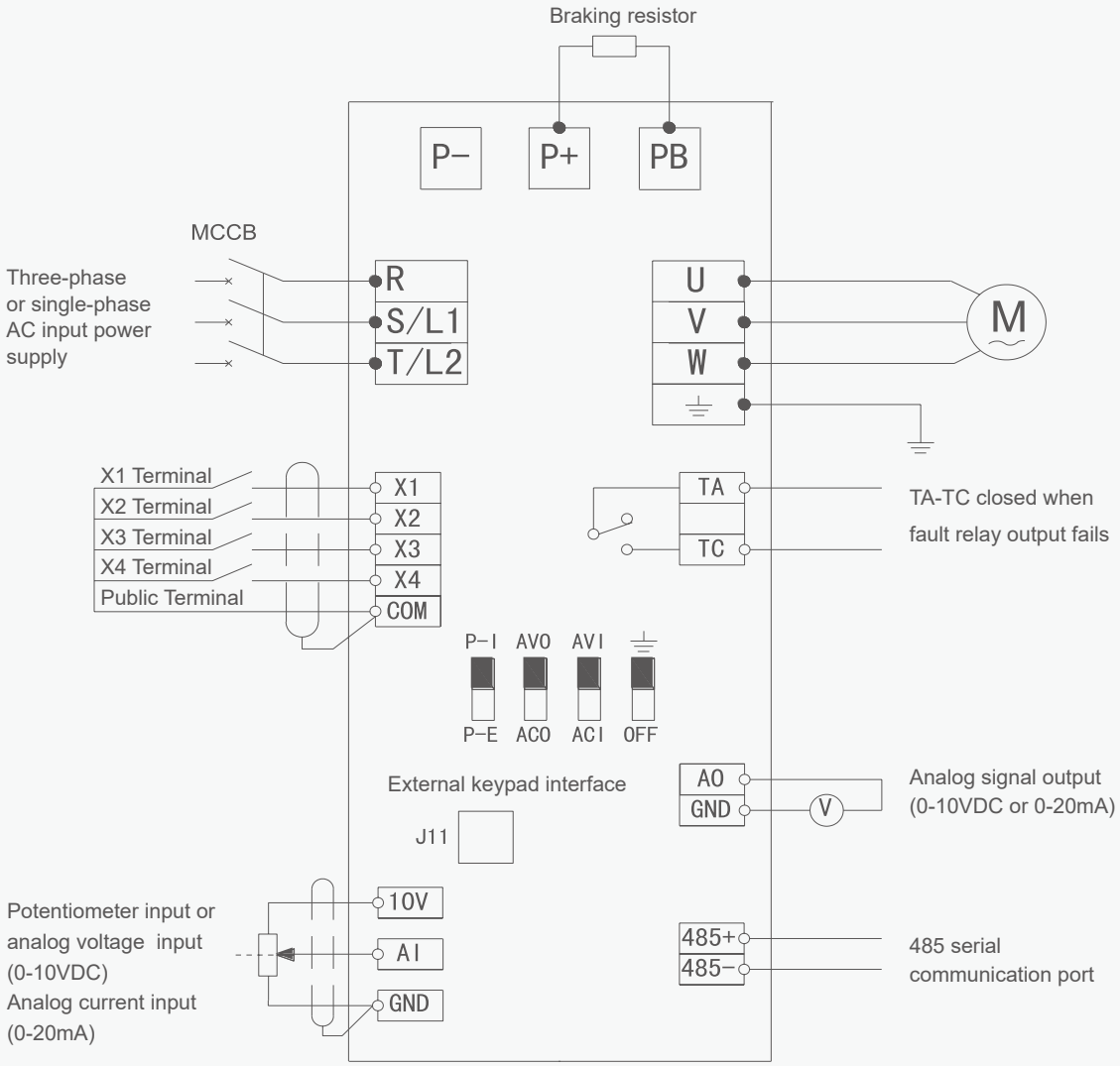

Basic Wiring Diagram

Dynamic voltage stabilization, static voltage stabilization, and no voltage stabilization can be selected according to the need to obtain the most stable operation effect.

C

Main terminal

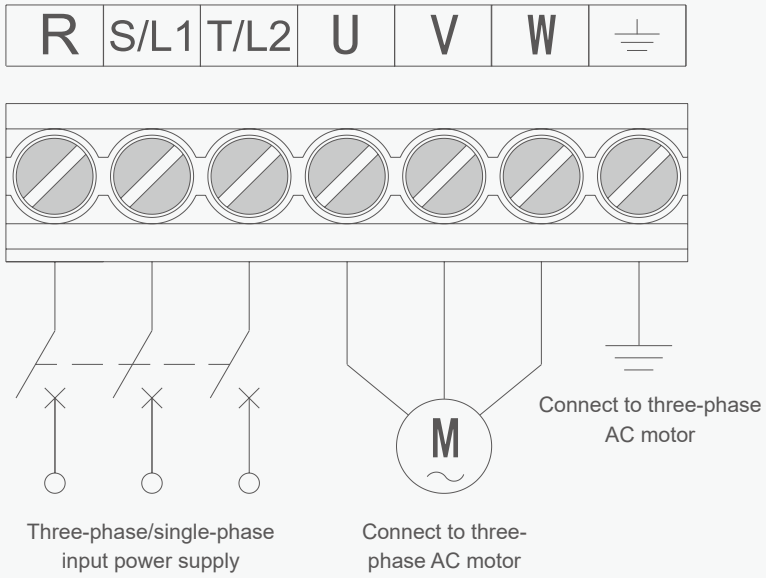

Main circuit terminal diagram 1

Applicable models: YCB600-2S0004G-YCB600-2S0022G
YCB600-4T0007G-YCB600-4T0030G

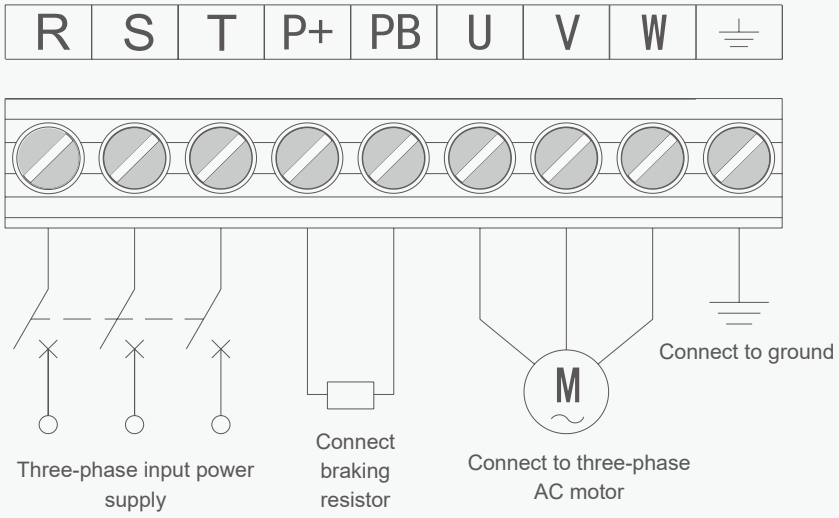

Main circuit terminal diagram 2

Applicable models: YCB600-2S0030G-YCB600-2S0055G
YCB600-4T0040G-YCB600-4T0110G

C

Control terminals

Control circuit terminals are shown in

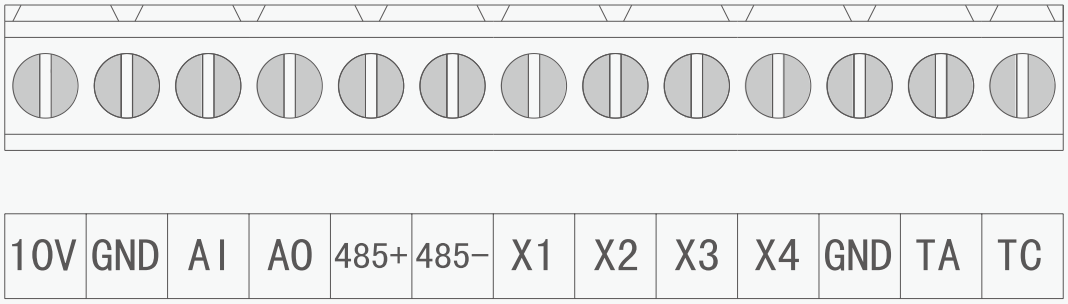

Control circuit terminals

Control circuit terminal

Category	Terminal label	Function Description	Electrical Specifications
Analog power terminal	10V	External analog given power supply, and GND, AL terminals connected to potentiometers, frequency setting can be performed	OUTPUT,10V/10mA DC voltage
Public end	GND	Signal common terminal	
Analog input terminal	AI	Analog voltage signalinput, reference ground isGND	INPUT, 0~10V DCvoltage
Analog output terminal	AO	Programmable analog voltage output,the function is set by parameter F2.10,the reference ground is GND	OUTPUT,0~10V DC voltage Or 0~20mA DC current
Communi cation terminal	485+	Positive end of communication signal	
	485-	Communication signaln negative terminal	

Control circuit

Category	Terminal label	Function Description	Electrical Specifications
Multi-funct ion inputterminal	X1	It is valid when Xn(n=1,2.3.4)-GND is short-circuited,and its functions are respectively set by parameters F2.13~F2.16	INPUT, 0~5V levelsignal, Active low, 5mA
	X2		
	X3		
	X4		
Programmable outputterminals	TA	Relay contact output,Normal: TA-TC disconnected;When in action: TA-TC is closed;The function is set byparameterF2.20	Contact Rating:NO: 240VAC-3A
	TC		

J1	
⏚ G	Indicates that the main control board is grounded
OFF	Indicates that the ground of the main control board isdisconnected
J2	
AVO	Indicates analog AO output voltage signal, 0-10V
ACO	Indicates analog AO output current signal, 0-20mA
J4	
P-I	Indicates that the built-in keyboard potentiometer is selected
P-E	Indicates the selection of an external keyboard potentiometer
J5	
AVI	Indicates analog AI input voltage signal, 0-10V
ACI	Indicates the analog AI input current signal, 0-20mA

C

Overall and mounting dimensions(mm)

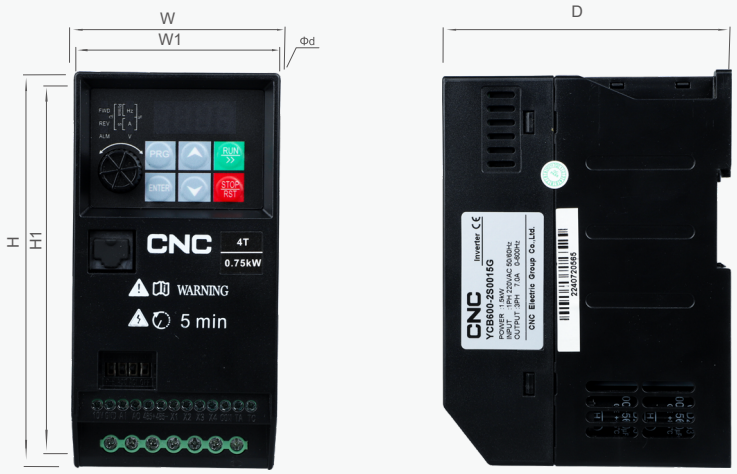

Inverter Qutline Dimension

Inverter Model	Power(kg)	Dimension(MM)					
		H	H1	W	W1	D	d
YCB600-2S0004G	0.4	146	136.5	72	63	105	Φ4.5
YCB600-2S0007G	0.75						
YCB600-2S0015G	1.5						
YCB600-2S0022G	2.2						
YCB600-4T0007G	0.75						
YCB600-4T0015G	1.5						
YCB600-4T0022G	2.2						
YCB600-4T0030G	3.0						
YCB600-2S0030G	3.0	182	172.5	87	78	127	Φ4.5
YCB600-4T0040G	4.0						
YCB600-4T0055G	5.5						
YCB600-4T0040G	4.0	240	229	118	106	155	Φ5.5
YCB600-4T0055G	5.5						
YCB600-4T0075G	7.5						
YCB600-4T0110G	11						

YCB600 Series Vector

Keypad Outline Dimension& Mounting holes Dimension

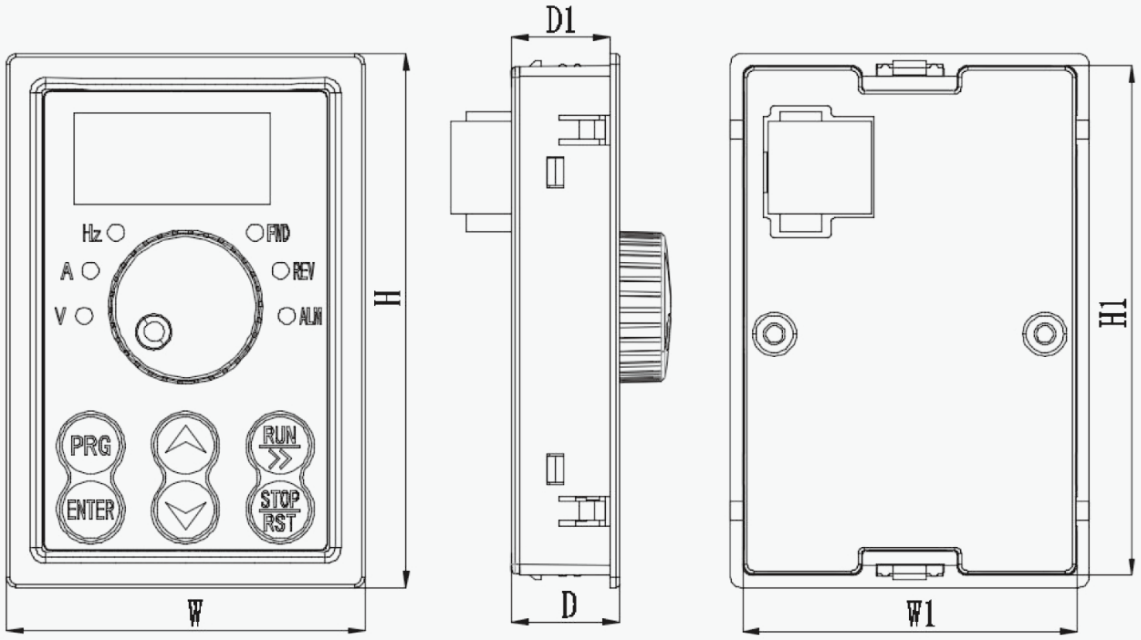

Keypad Dimension

Dimensions of keypad base holes				Keypad thickness	
W	W1	H	H1	D	D1
53mm	49.4mm	79mm	75.4mm	15.9mm	14.5mm

Tips:

- It needs to be equipped with an external display panel,WVhen the YCB600 series operation panel is led out.
- The opening size of the external display panel is:width 49.4mmx height 75.4mm.

YCB700 Series Mini Vector Inverter



General

YCB700 Series Mini Inverter is a compact and economical inverter can be used for textile, paper making, machine tools, packaging, fans, water pumps and a variety of automatic.

Type designation

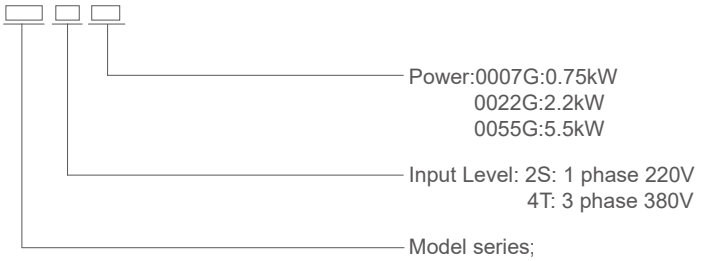

C

YCB700 Series Mini Vector Inverter

Technical Specifications

Model	Power Supply Capacity KVA	Input Current A	Output Current A	Adaptable Motor	
				KW	HP
One phase power supply:220V,50Hz/60Hz					
2S0007G	1.5	8.2	4.0	0.75	1
2S0015G	3.0	14.0	7.0	1.5	2
2S0022G	4.0	23.0	9.6	2.2	3
Three phase power supply: 380V, 50Hz/60Hz					
4T0007G	1.5	3.4	2.1	0.75	1
4T0015G	3.0	5.0	3.8	1.5	2
4T0022G	4.0	5.8	5.1	2.2	3
4T0040G	5,9	10,5	9	3,7	5
4T0055G	8.9	14.6	13	5.5	7

C

Wiring Diagram

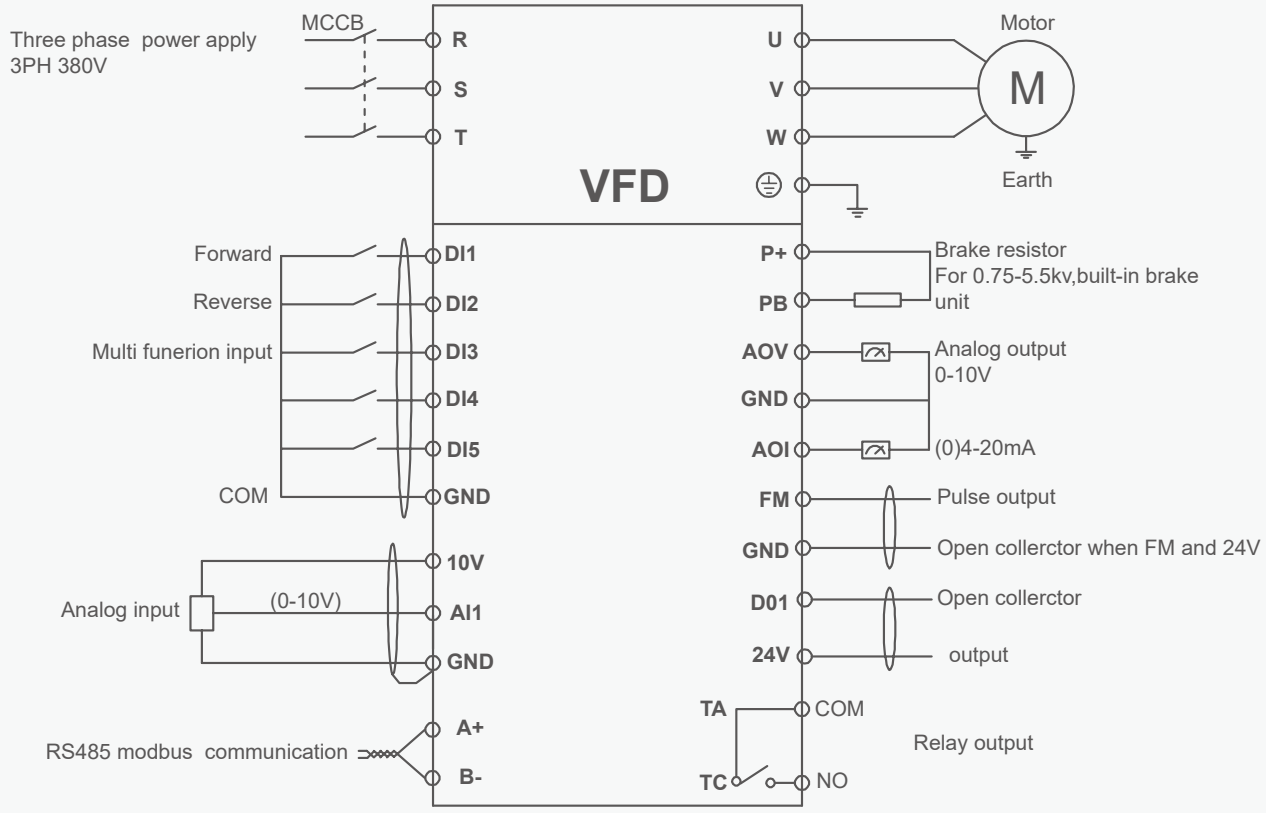

C

Technical Index

1. Installation Dimension Diagram of Outer Panel

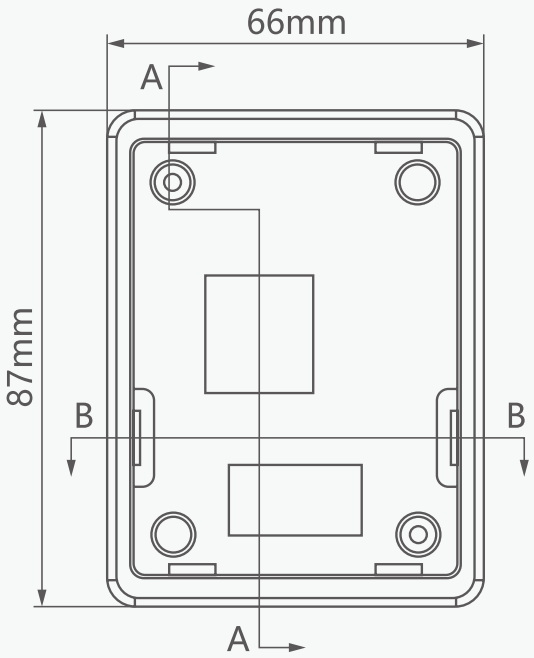

2. Product Dimension Diagram, Installation Diagram 0.75~2.2kW

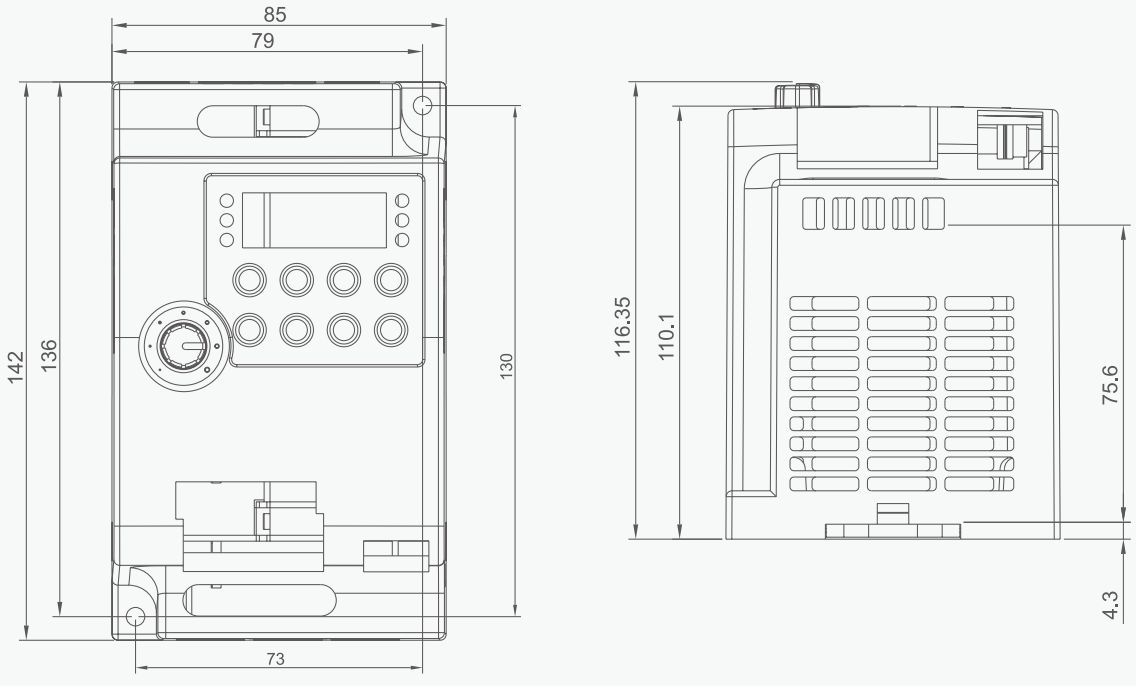

3. Product Dimension Diagram, Installation Diagram 4~5.5kW

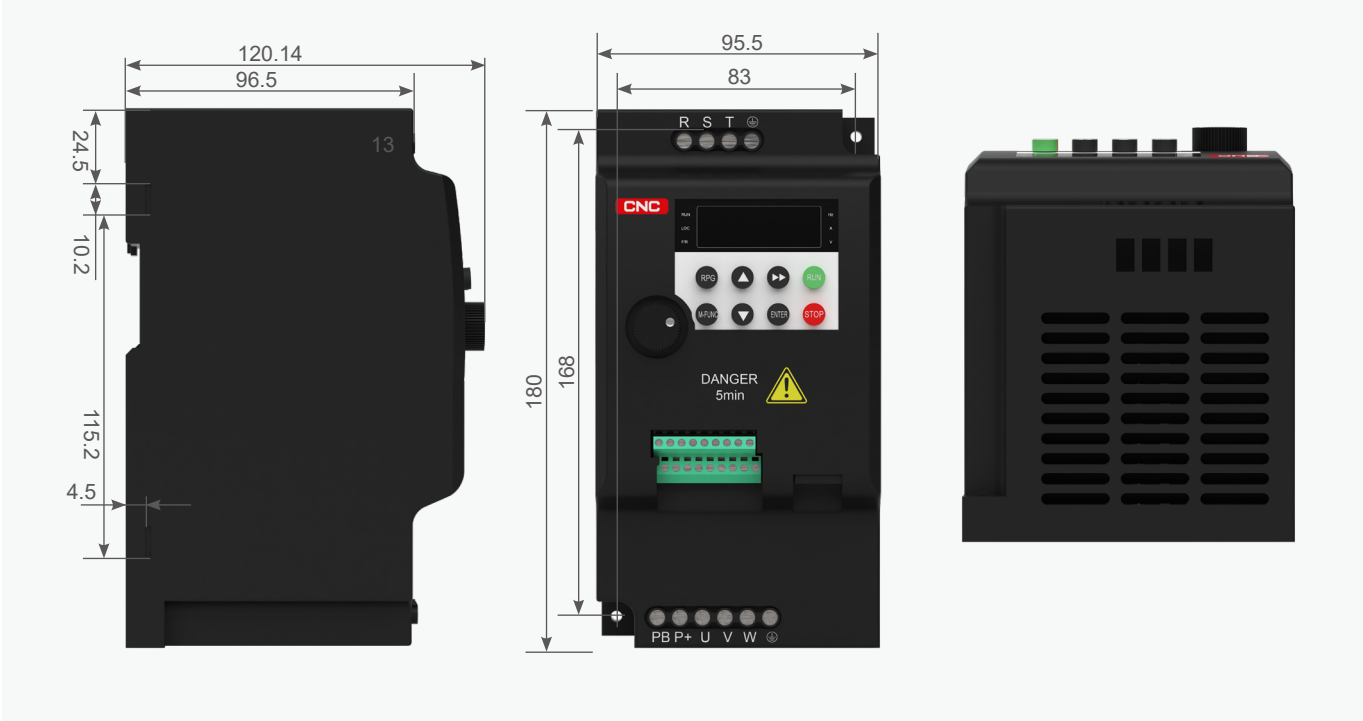

C

Technical Index

1.Interface and Terminal Instructions

1.1Main Circuit Terminal

Table 4-1 Interface and Terminal Function Description

Terminal	Name	Function Description
R、S、T	Ac power input terminal	Connect the input three-phase AC power supply,220V single-phase connect R, T
P+、PB	Brake resistor terminal	Connect brake resistor
U、V、W	Output terminal	Connect three-phase motor
⏚	Earth terminal	Grounding Connection

1.2 Control Circuit Terminal

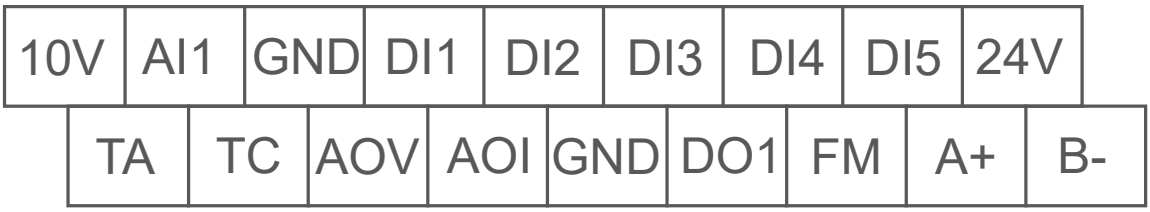

Sketeh 1 Control Circuit Terminal Diagram

Table 2 VFD Deseription of Control Circuit Terminals

Item	Terminal	Name	Function Description
Power supply	10V-GND	External 10V power supply	1kΩ-5kΩ Provide +10 V power supply to external unit.Generally, it provides power supply to external potentiometer with resistance range of 1-5 kΩ.Maximum output current: 10 mA
	24V-GND	External 24V power supply	Provide +24 V power supply to external unit.Generally, it provides power supply to DI/DO terminals and external sensors.Maximum output current: 200 mA
Anolog input	AI1-GND	Anolog input terminal 1	Input range: DC 0V~10V/0mA~20mA. decided by P4-39. Resistance input: 22 kΩ (voltageinput), 500 Ω(current input)
Digital input	DI1-GND	Digital input I	Resistance input:1kΩ Voltage range for level input: 5-30V
	DI2-GND	Digital input 2	
	DI3-GND	Digital input 3	
	DI4-GND	Digital input 4	
	DI5-GND	High-speed pulse Input terminal	Besides features of DII-DI4, it canbe used forhigh-speed pulse input.Maximum input frequency: 20 KHz
Analog output	AOV-GND	Analog output	Output voltage range: 0-10 V Output current range: 0-20 mA
	AOI-GND		
Digital output	DO1-GND	Digital output 1	Optical coupling isolation, dual polarity open collector output Output voltage range: 0-24V Output current range: 0-50 mA
	FM-GND	High-speed pulse output	It is limited by F5-00 (FM terminal output mode selection).As high-speed pulse output, the maximum frequency hits 20 kHz.As open-collector output, its specification is the same as that of DO1
	TA-TC	Relay NO terminal	Contact driving capacity: 250Vac,3A,COS0=0.4 30Vdc,1A
Communication terminal	A+-B-	485 communication terminal	MODBUS-RTU protocol communication input and output signal terminals

YCB1000 Variable Frequency Drive



General

1. Sensorless vector control with the best low frequency compensation ability
2. Designed with special radiator tree and switch power, all of such kinds of new technologies improve the performance
3. Several protective technologies and new component have been applied to the circuit, notably improve the anti-interference ability
4. Realize the preset frequency, or central frequency adjustable swing frequency function
5. Several phases speed operation controlled by build-in PLC or controlling terminal
6. Modulation mode: space vector pulse width modulation SVPWN
7. Automatic energy saving operation: automatically optimize V/F curve to save the energy
8. Switch input channel: forward and reversal roration control, 8 channel program switch input, 35 kinds of function
9. Strong overload performance: 150% rated corrent for 1 minute, 180% rated current for 3 seconds
10. Communication function: RS485 standard communication interface, support ASCII and RTU format MODBUS communication protocol

C

Type designation

Company code	Frequency inverter		Voltage level	Input voltage	Adaptive motor	Frequency inverter type number
YC	B1000	-	4	T	0015	G
CNC	/		2: 220V 4: 380V	S: Single phase T: Triple phase	0007: 0.75kW 0015: 1.5kW 0075: 7.5kW	G: Constant Torque P: Fan & Pump type

YCB1000 Variable Frequency Drive





Application

1. Applied with boiler drunm, induced draft fan, coal mine ventilator, etc.
2. Applied in central air-condition energy saving optimization, air compressor energy saving renovation, music fountain, etc.
3. Applied with water circulating pump, water supply pump, clear water pump, sewage pump, purification pump, constant pressure water supply, oilfield water injection pump, oil pump, etc.
4. Applied with mine conveyer, coal feeder, mixer, pulverizer, converter, blast furnace, etc.
5. Applied with extruder, bottle blowing machine, film blowing machine, film conveying belt, centrifugal separator, compressor, sprayer, etc.

Wiring diagram

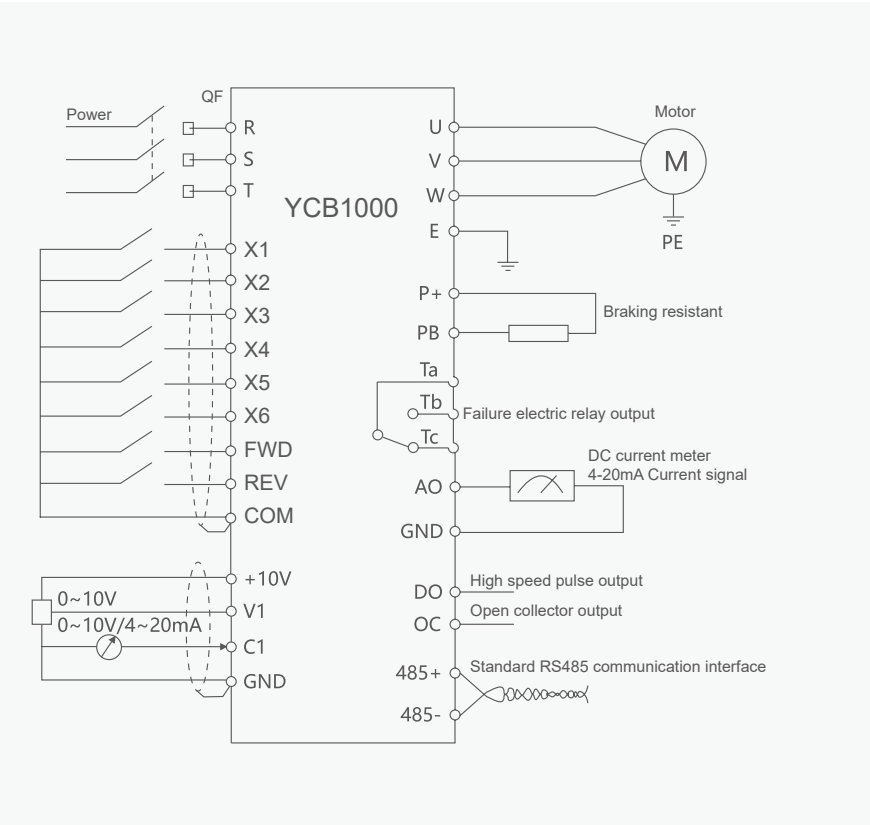

YCB1000 Variable Frequency Drive

Technical data

Item		Item Description
Inpu	Rated voltage, frequency	60
	Permissible working voltage	0.15
Output	Rated voltage	Three phases 0~input voltage
	Frequency	0~400Hz
Overloading capacity		G type: 110% long term, 150% 1min, 180% 1s, 200% instantaneous trip P type: 120% 1min, 150% 1s, 180% instantaneous trip
Control Function	Working mode	Electromagnetic vector PWM modulation
	Adjustment range	1:100
	Starting torque	100% rated torque at 3Hz
	Frequency accuracy	Digital setting: highest frequency×±0.01% Analog setting: highest frequency×±0.2%
	Frequency resolution	Digital setting: 0.01Hz; Analog setting: highest frequency×0.1%
	Torque	Automatically increase the torque according to the output current. Manually rise torque up, scope:1~30%
	V/F curve	1. Linear curve 2. Square curve
	Acceleration, slow-down time	0.1~600s/min continuous adjustment.
	Compensation for rotation error	Setting scope: 0~20%, it can auto adjust the output frequency of inverter according to the motor loading, to reduce speed changes caused by motor load fluctuations.
	Built-in PID	Easily form the loop control system, which is suitable for pressure control, flux control and etc.
	Auto voltage regulation	When network voltage change, it can auto adjust the output of PWM and keep output voltage constant
	Auto energy-saving run	As load change, it auto optimize the V/F curve, to realize the energy-saved running.
Running Function	Frequency setting	The setting of Potentiometer in the panel: operation panel / key setting, terminal of outer control Rise / Drop setting, ananlog voltage signal or outer potentiometer setting, analog current signal setting, ananlog combination setting, setting of 485 serial communication.
	Running command	Control of operation panel, control of outer terminals, control of serial communication
	Analog output terminal	0~10V DC voltage signal output, can realize the output of frequency, current and etc, physical parameters
	Input signal	Positive/megative rotation signal, multi-step signal, fault signal, reset signal
	Output signal	Programmable integrated circuit opening output, fault signal output
Braking Function	Braking by power consumption	External braking resistor, maximum braking torque 100%
	Brake by direct current	When starting or stopping, it is optional respectively, action frequency: 0-20Hz,action voltage level: 0-20%, action time 0-30s, continuously adjustable
Other Functions		Jumping frequency, point function, counter, rotation speed track, restart after instan-staneous power off, upper and lower frequency limit, acceleration and slow-down modes adjustable, cymometer and voltmeter output, multi-step / program running, two lines / three lines control, double polar control, selection of multifunctional input terminal, auto reset after fault, 485 serial communication
Protection Function		Input protection against phase failure, over-current protection, overloading protection, under-voltage protection, overheating protection, output short circuit protection and etc.
LED Display		It can display real-time working status, monitoring parameters, function data, fault codes and etc of the inverter
Optional Accessories		Braking parts, remote and operation panel and connection wire, communication panel

YCB1000 Variable Frequency Drive

Item		Item Description
Ambient Conditions	Working site	Indoor, without direct sunshine, no dust, corrosive gas, flammable and explosive gas, oil fog, steam, water drop, salty
	Altitude	Altitude less than 1000m
	Ambient temperature	-10-+45°C (The only machine: -10~+50°C)
	Humidity	20~90%RH, Without water condensation
	Vibration	<0.5G
	Storage temperature	-20~+60°C
	Protection grade	IP20
Structure	Cooling mode	Fan cooling
	Mounting mode	Wall hung type, standing type

C

Overall and mounting dimensions(mm)

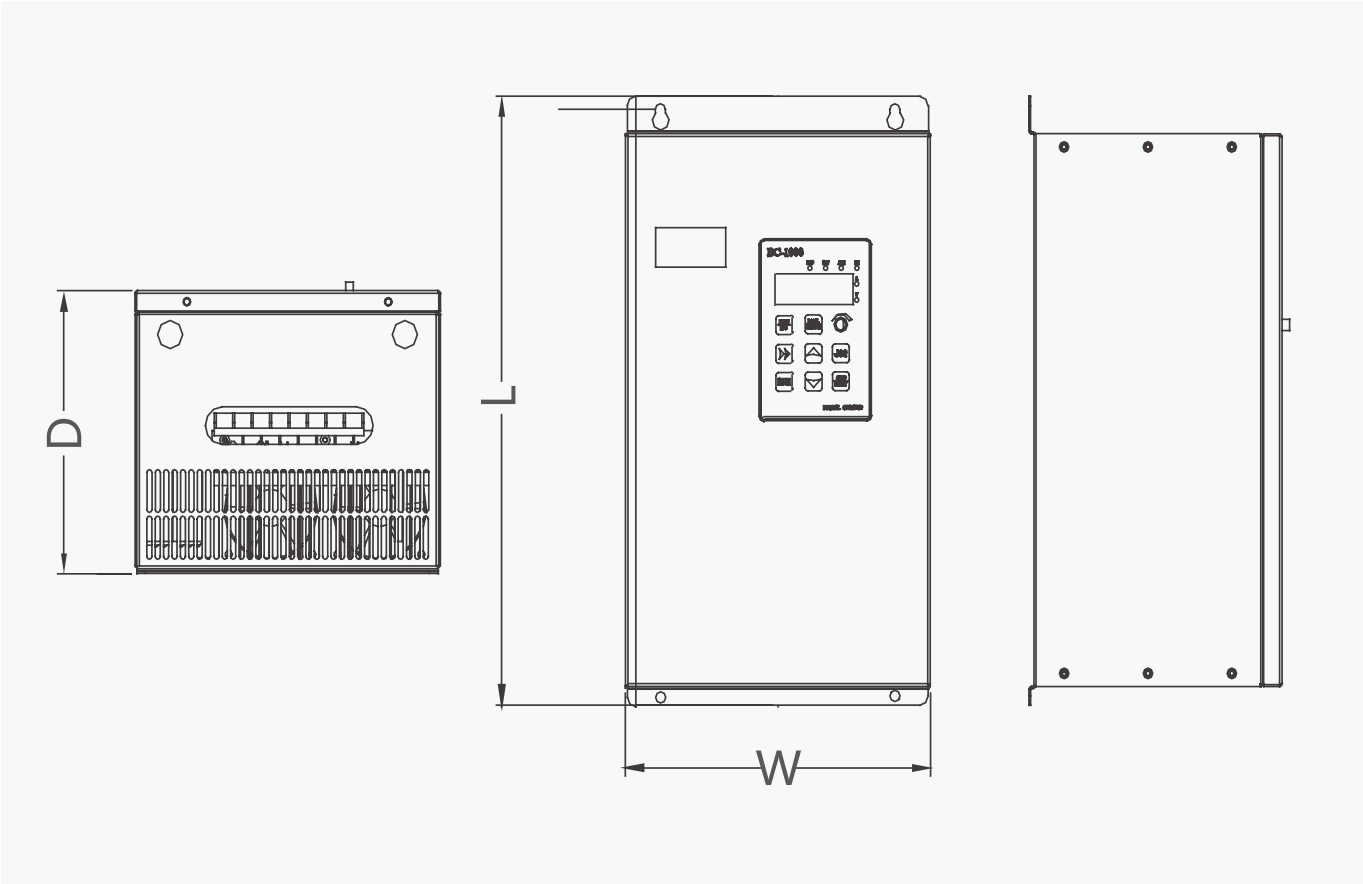

YCB1000 Variable Frequency Drive

Overall and mounting dimensions(mm)

YCB1000/380V three phase				Appearance Size (mm) L×W×D	Aperture Size of Panel (mm) L×H
No.	Model	Power	Voltage		
1	YCB1000	0.75kW	380V	169×125×170	Panel: 75×55 Panel Cover: 95×61
2		1.5kW			
3		2.2kW			
4		4kW			
5		5.5kW		245×150×188	Panel: 93×70 Panel Cover: 131×91
6		7.5kW			
7		11kW		320×220×210	Panel: 131×70 Panel Cover: 156×80
8		15kW			
9		18.5kW		395×260×215	
10		22kW			
11		30kW			
12		37kW		520×290×290	
13		45kW		570×290×280	
14		55kW			
15		75kW		600×325×310	
16		93kW			
17		110kW		630×380×380	
18		132kW			
19		160kW		880×510×400	
20		185kW		980×510×400	
21		200kW			
22		220kW			
23		260kW		1050×710×420	
24		280kW			
25		315kW			
26		350kW			
27		400kW		1200×860×400	
28		500kW			

YCB1000/220V single phase				Appearance Size (mm) L×W×D	Aperture Size of Panel (mm) L×H
No.	Model	Power	Voltage		
1	YCB1000	0.75kW	220V	142×85×122	Panel: 140×73 Panel Cover: 175×87
2		1.5kW			
3		2.2kW		185×96×150	

C

YCB3000 Variable frequency drive



General

1. YCB3000 series frequency converter is a general-purpose high-performance current vector frequency converter, which is mainly used to control and adjust the speed and torque of three-phase AC asynchronous motors. It adopts highperformance vector control technology, low-speed and high-torque output, and has the advantages of good dynamic characteristics, super overload capacity, stable performance, powerful protection function, simple human-machine interface, and easy operation.
2. It can be used for driving of weaving, papermaking, wire drawing, machine tool, packaging, food, fan, water pump and various automatic production equipment.

Type designation

Name	Power input voltage	Input phase line	Rated power of frequency converter	Load type
YCB3000 -	4	T	0015	G
YCB3000	2:AC220V 4:AC380V	S:Single phase T:Three phase	0007: 0.75kW 0015: 1.5kW 0022: 2.2kW	G: Constant torque load P: Fan and water pump loads



Note: The frequency converter YCB3000-2S and 2T are both G-type load types, The maximum power of the frequency converter YCB3000-2S reaches 5.5kW;YCB3000-2T maximum power to 7.5kW.

Operating conditions

Environment	
Where to use	Indoor, free from direct sunlight, no dust, corrosive gas, combustible gas, oil mist, water steam, dripping water or salt, etc
Above sea level	Below 1000m, 1% for 100m over 1000m, 1% over 3000m (Note: The highest elecation of 0.4~3kW drive is 2000m, if used above 2000m, please contact the manufacturer)
Ambient temperature	-10°C~+40°C, when the temperature exceeds 40°C. The decrease is 1.5% per 1C increase, and the maximum ambient temperature is 50°C
Humidity	Less than 95%RH, no condensation
Vibrate	Less than 5.9m/s²(0.6g)
Storage temperature	-20°C~+60°C

YCB3000 Variable frequency drive

Technical

Project	Technical specifications	
Input the frequency resolution	Number setting: 0.01Hz, simulation setting: maximum frequency 0.025%	
Control method	Open-loop vector control(SVC); closed-loap vector control(FVC); V/F control.	
Pull-in torque	0.25Hz/150%(SVC); 0Hz/180%(FVC)	
Speed range	1:200 (SVC)	1:1000 (FVC)
Steady speeda accuracy	+0.5% (SVC)	+0.02% (FVC)
Torque control accuracy	FVC: +3%, SVC: 5Hz above +5%	
Recurrent ascension	Automatic torque increase, manual torque increase of 0.1%-30.0%.	
V/F curve	Four ways: straight line, multi-point type; complete V y F separation; incomplete V y F separation.	
Add deceleration curve	Straight-line or S-curve acceleration and deceleration modeFour acceleration and deceleration times, acceleration anddeceleration time range 0.0.6500.0s	
DC injection braking	DC brake starting frequency:0.00Hz- maximum frequency; Brake time: 0.0s~36.0s; Brake action current value: 0.0%-100.0%	
Electronic contro	Tap movementfrequency range: 0.00Hz-50.00Hz;Tap action, acceleration and deceleration time is 0.0s-6500.0s	
Isimple PLC, multi-segment peedoperation	Up to 16 segments can be run with a built-in PLC or controlterminal.	
Built-in PID	It can easily realize the process control closed-loop controlsystem.	
Automatic VoltageAdjustment(AVR)	When the grid voltage changes, the output voltage constant.	
Over pressure overloss speed control	Automatic limit of current and voltage during operation toprevent frequent excessive flow pressure trip.	
Quick flow	Minimize the over current fault, and protect the normal	
Restriction function	operation of the frequency converter.	
Torque limit andcontrol	The characteristic of "excavator" automatically limits the torqueduring operation to prevent frequent current trip; the vectorcontrol mode can realize torque control.	
Instantly stop	In case ofinstantaneous power outage, the frequency converteris maintained to reduce the load feedback energy compensationvoltage in a short time.	
Fast flow limit	Avoid the frequent over current fault of the frequency converter.	
Invented IO	Five sets of virtual DIDO, which can achieve simple logic control.	
Timing control	Timing control function: set the time range of 0.0Min ~ 6500.0Mir	
Multi-motorswitching	Two sets of motor parameters, can realize two motor switchcontrol.	
Multithreaded bussupport	Support for six fieldbuses: Modbus, Profibus-DP CANlinkCANopen, Profinet, and EtherCAT.	
Motor overheatingprotection	With the IO extension card 1 option, the analog input AI3 acceptsthe motor temperature sensorinput(PT100, Pt1000).	
Multi-encodersupport	Support for differential, open-circuit collector, UVW, rotarytransformer,etc	

YCB3000 Variable frequency drive

Project	Technical specifications
Run instructions	Operation panelgiven, control terminal given, serialcommunication port given.It can be switched in many ways
Frequencyinstruction	10 frequency commands: digital given, analog voltage, analogcurrent, pulse, serial port given. You can be switched in manyways
Auxiliary frequencyinstruction	10 Auxiliary frequency commands.It can flexibly realize theauxiliary frequency fine-tuning and frequency synthesis
Input terminal	standard: • Five DI terminals, one of which supports a high-speedpulseinput ofup to 100kHz • Two AI terminals,1, one only supports 0-10V voltageinput,one supports 0-10V voltageinput or 0-20mAcurrentinput Extended ability: • The 5 DI terminals of the • One AI terminal, support-10V-10V,oltage input, andsupport PT100/PT1000 support
leading-outterminal	standard: • One high-speed pulse output terminal(optional as theopen-circuit collectortype), • Support the square-wave signal output of 0~100kHz • 1 DO terminal • One relay output terminal • One AO terminal with 0 to 20 mA current output or 0 to 10Vvoltage output Extended ability: • 1 DO terminal • One relay output terminal • One AD terminal with 0 to 20 mA current output or 0 to 10Vvoltage output utput
LED show	Display parameters
Parameter copy	Quick replication of the parameters is available through theLCD action paneloption
Key-lock andfunction selection	Part or all of the keys can be locked to define the scope ofsome keys to prevent misoperation
Lack ofphaseprotection	Input phase protection, output phase phase protection
Instant over currentprotection	Stop at over 250%% ofthe rated output current
Over voltagecrowbar	Stop when the main circuit DC current is above 820V
Under voltageprotection	Stop when the main circuit DC currentis below 350V
Overheat protection	Protection is triggered when the inverter bridge overheated
Overload protection	150%rated current for 60s shutdown (4T4500G: 130% ratedcurrent running for 60s shutdown)
Over currentpratection	Stop protection exceeding 2.5 times rated current
Brake protection	Brake unit overload protection, brake resistance short-circuitprotection
Short-circuitprotection	Dutput alternate with short circuit protection, output shortcircuit to ground pratection

YCB3000 Variable frequency drive

Wiring diagram

Three-phase 380V~480V standard wiring diagram

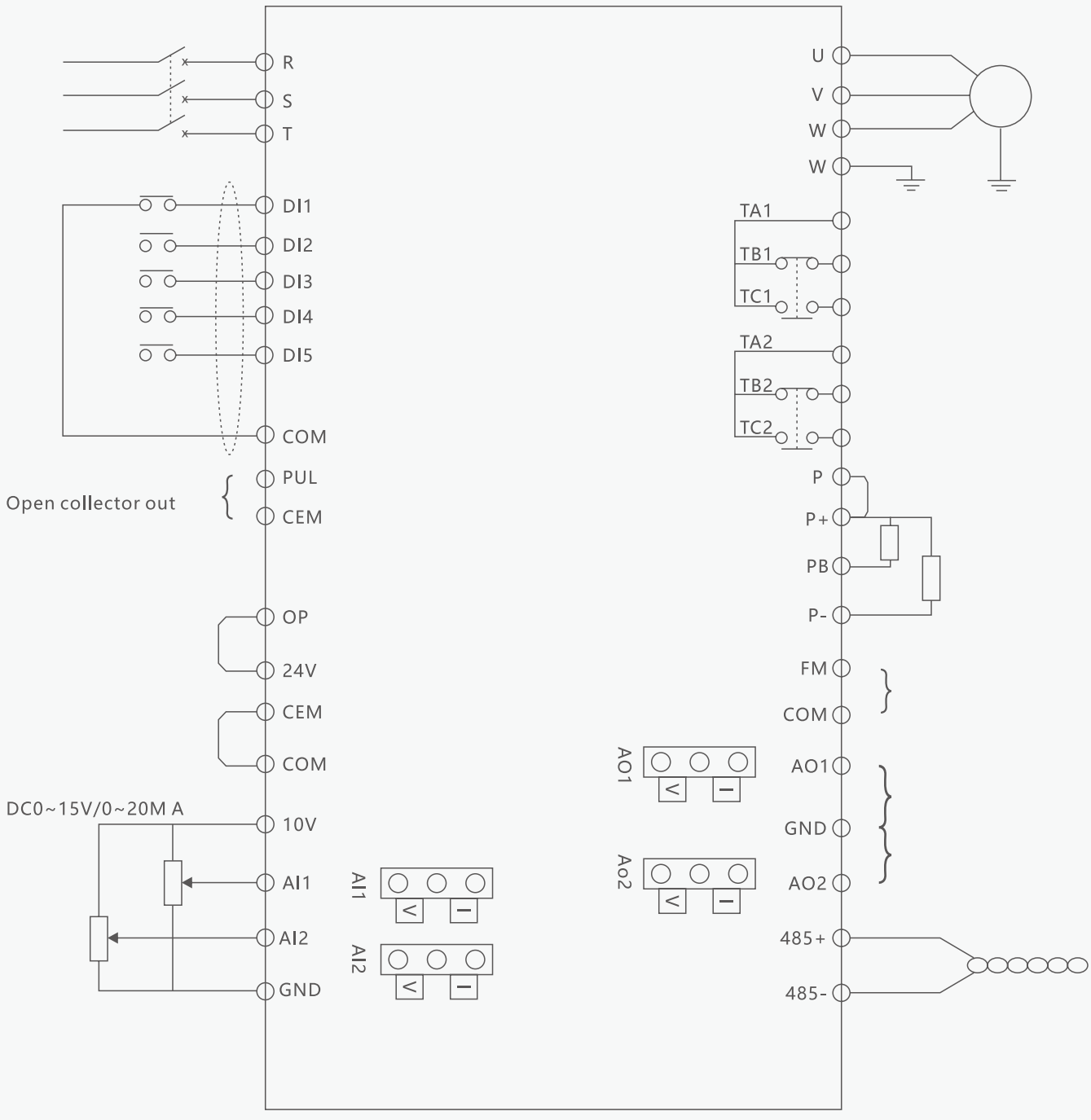

C

YCB3000 Variable frequency drive

Product adaptation table

Model	Power supply capacity is KVA	Input current (A)	Output current (A)	Adaptation motor	
				KW	HP
Single-phase power supply: 220V (-10%~+15%), 50/60Hz					
YCB3000-2S0007G	1.5	8.2	4.0	0.75	1
YCB3000-2S0015G	3.0	14	7.0	1.5	2
YCB3000-2S0022G	4.0	23	9.6	2.2	3
YCB3000-2S0040G	8.9	14.6	13	4.0	5
YCB3000-2S0055G	17	26	25	5.5	7.5
Three-phase power supply: 220V (-10%~+15%), 50/60Hz					
YCB3000-2T0007G	3	5	3.8	0.75	1
YCB3000-2T0015G	4	5.8	5.1	1.5	2
YCB3000-2T0022G	5.9	10.5	9	2.2	3
YCB3000-2T0040G	8.9	14.6	13	4.0	5
YCB3000-2T0055G	17	26	25	5.5	7.5
YCB3000-2T0075G	21	35	32	7.5	10
YCB3000-4T0110G	30	46.5	45	11	15
YCB3000-4T0150G	40	62	60	15	20
YCB3000-4T0185G	57	76	75	18.5	25
YCB3000-4T0220G	69	92	91	22	30
YCB3000-4T0300G	85	113	112	30	40
YCB3000-4T0370G	114	157	150	37	50
YCB3000-4T0450G	135	180	176	45	60
YCB3000-4T0550G	161	215	210	55	75
YCB3000-4T0750G	236	315	304	75	100

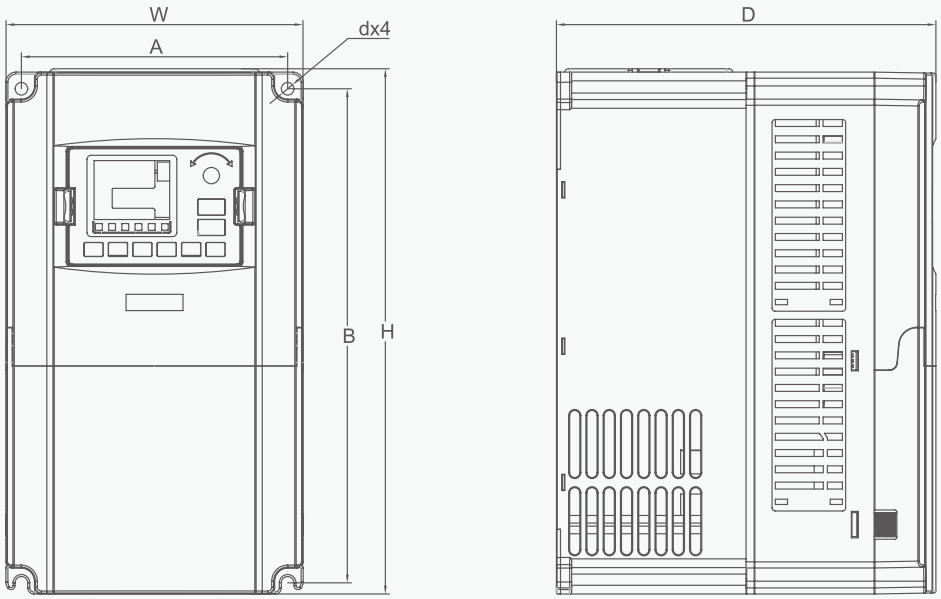

YCB3000 Variable frequency drive

Product adaptation table

Model	Power supply capacity is KVA	Input current (A)	Output current (A)	Adaptation motor	
				KW	HP
Three-phase power supply: 380V (-10%~+15%), 50/60Hz					
YCB3000-4T0015G	3.0	5	3.8	1.5	2
YCB3000-4T0022G	4.0	5.8	5.1	2.2	3
YCB3000-4T0030G	5.0	8.0	7.2	3.0	4
YCB3000-4T0040G	5.9	10.5	9	4.0	5
YCB3000-4T0055G	8.9	14.6	13	5.5	7.5
YCB3000-4T0075G	11	20.5	17	7.5	10
YCB3000-4T0110G	17	26	25	11	15
YCB3000-4T0150G	21	35	32	15	20
YCB3000-4T0185G	24	38.5	37	18.5	25
YCB3000-4T0220G	30	46.5	45	22	30
YCB3000-4T0300G	54	57	60	30	40
YCB3000-4T0370G	63	69	75	37	50
YCB3000-4T0450G	81	89	91	45	60
YCB3000-4T0550G	97	106	112	55	75
YCB3000-4T0750G	127	139	150	75	100
YCB3000-4T0900G	150	164	176	90	120
YCB3000-4T1100G	179	196	210	110	150
YCB3000-4T1320G	220	240	253	132	180
YCB3000-4T1600G	263	287	304	160	210
YCB3000-4T1850G	305	323	340	185	240
YCB3000-4T2000G	334	365	377	200	260
YCB3000-4T2200G	375	410	426	220	285
YCB3000-4T2500G	404	441	465	250	320

Model	Power supply capacity is KVA	Input current (A)	Output current (A)	Adaptation motor	
				KW	HP
Three-phase power supply: 380V (-10%~+15%), 50/60Hz					
YCB3000-4T2800G	453	495	520	280	370
YCB3000-4T3150G	517	565	585	315	420
YCB3000-4T3550G	565	617	650	355	480
YCB3000-4T4000G	629	687	725	400	530
YCB3000-4T4500G	716	782	820	450	600
YCB3000-4T5000G	800	820	900	500	680
YCB3000-4T5600G	930	950	1020	560	750
YCB3000-4T6300G	1050	1050	1120	630	850
YCB3000-4T7200G	1200	1200	1300	720	960
YCB3000-4T8000G	1330	1380	1420	800	1060
YCB3000-4T10000G	1660	1650	1720	1000	1330

YCB3000 Variable frequency drive

Overall and mounting dimensions(mm)

Model	Install the holeposition of mm		External size: mm			Install aperture (mm)
	A	B	H	W	D	
YCB3000-4T0015G	79	154	164	89	125	Φ4
YCB3000-4T0022G	79	154	164	89	125	Φ4
YCB3000-4T0030G	79	154	164	89	125	Φ4
YCB3000-4T0040G	86	173	184	97	145	Φ5
YCB3000-4T0055G	86	173	184	97	145	Φ5
YCB3000-4T0075G	131	245	257	146.5	185	Φ6
YCB3000-4T0110G	131	245	257	146.5	185	Φ6
YCB3000-4T0150G	131	245	257	146.5	185	Φ6
YCB3000-4T0185G	151	303	320	170	205	Φ6
YCB3000-4T0220G	151	303	320	170	205	Φ6
YCB3000-4T0300G	120	385	400	200	220	Φ7
YCB3000-4T0370G	120	385	400	200	220	Φ7
YCB3000-4T0450G	200	493	510	260	252	Φ7
YCB3000-4T0550G	200	493	510	260	252	Φ7
YCB3000-4T0750G	200	493	510	260	252	Φ7
YCB3000-4T0900G	200	630	660	320	300	Φ9
YCB3000-4T1100G	200	630	660	320	300	Φ9
YCB3000-4T1320G	250	755	780	400	345	Φ12
YCB3000-4T1600G	250	755	780	400	345	Φ12
YCB3000-4T1850G	250	755	780	400	345	Φ12
YCB3000-4T2000G	300	872	900	460	355	Φ12
YCB3000-4T2200G	300	872	900	460	355	Φ12
YCB3000-4T2500G	360	922	950	500	355	Φ12
YCB3000-4T2800G	360	922	950	500	355	Φ12
YCB3000-4T3150G	500	1029	1050	650	365	Φ12
YCB3000-4T3550G	500	1029	1050	650	365	Φ12
YCB3000-4T4000G	500	1265	1300	650	385	Φ14
YCB3000-4T4500G	500	1265	1300	650	385	Φ14
YCB3000-4T5000G	500	1265	1300	650	385	Φ14
YCB3000-4T5600G	600	1415	1450	850	435	Φ14
YCB3000-4T6300G	600	1415	1450	850	435	Φ14
YCB3000-4T7200G	600	1415	1450	850	435	Φ14
YCB3000-4T8000G	1000	1415	1450	1100	465	Φ14
YCB3000-4T10000G	1000	1415	1450	1100	465	Φ14

DC Variable Frequency Drives

YCB2200PV Series DC Variable Frequency Drive





CNC ELECTRIC

YCB2200PV Series DC Variable Frequency Drive

Solar pumping system

The YCB2200PV solar pumping system serves to provide water in remote applicarions where electrical grid power is either unreliable or un-available. The system pumps water using a high-voltage DC power source such as aphotovoltaic array of solar panels. Since the sun is only available during certain hours of a day and only in good weather conditions, the water is generally pumped into a storage pool or tank for furher usage. And water sources are those natural or special such as river, lake, well or waterway, etc.

Solar pumping system is constituted by solar module array, combiner box,liquid level switch, solar pump erc. It aims at providing solutions for the region that suffers water shortage, no power supply or uncertain power supply.

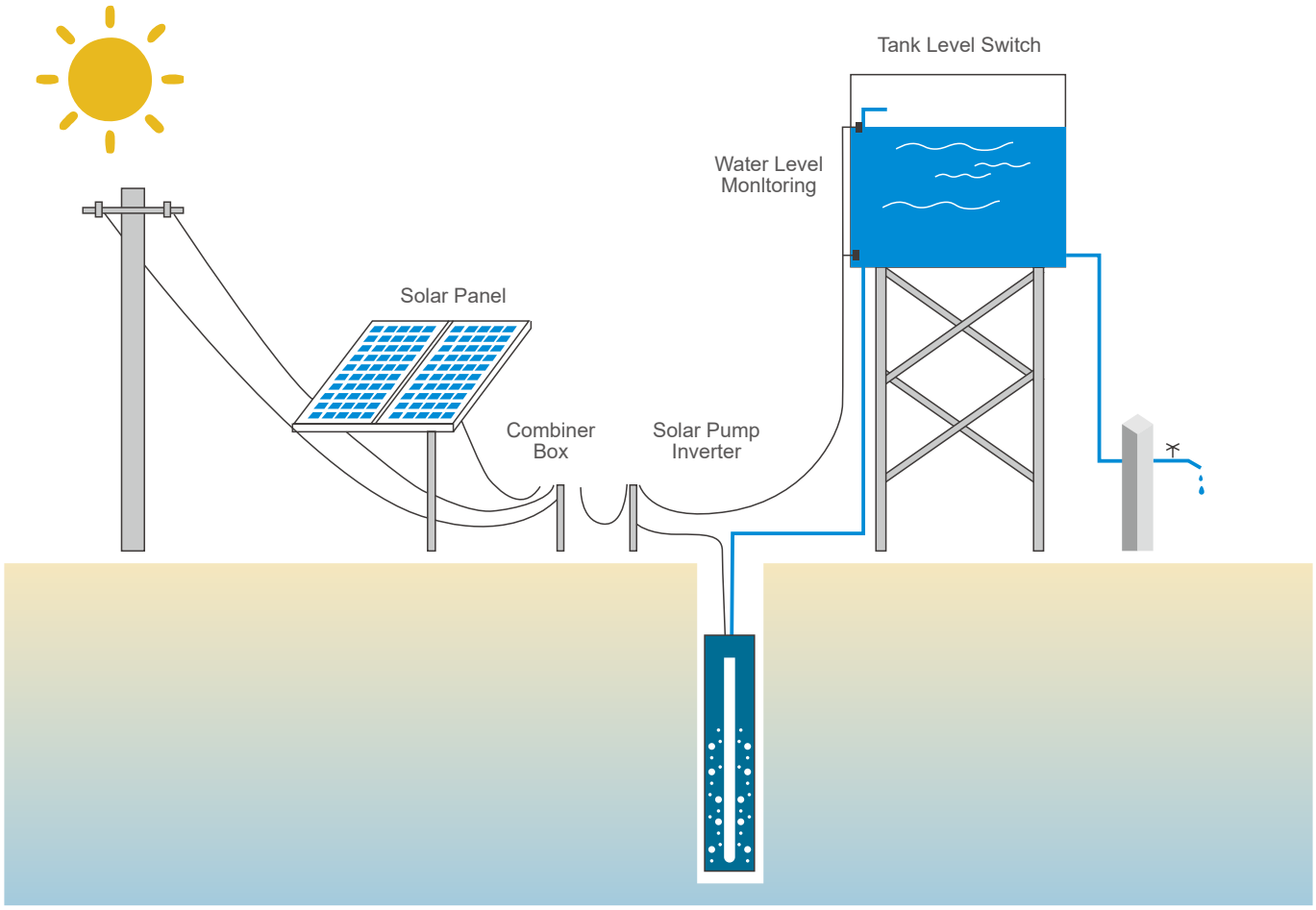

YCB2200PV Series DC Variable Frequency Drive

General

In order to satisfy the demands of various pumping applications, YCB2200PV solar pump controller adopts Max Power Point Tracking and proven motor drive technology to maximize output from solar modules. It supports both single phase or three-phase AC input such as a generator or inverter from battery. The controller provides fault detection, motor soft start, and speed control. YCB2200PV controller is designed to proceed these features with the plug and play, ease of installation.

Type designation

YCB2200PV - T 5D5 G

Model		Output voltage	Adaptive power	Load type
YCB2200PV	-	T	5D5	G
YCB2200PV		S: Three phase AC220V T: Three phase AC380V	0D75:0.75kW 1D5:1.5kW 2D2:2.2kW 4D0:4.0kW 5D5:5.5kW 7D5:7.5kW 011:11kW 015:15kW 110:110kW	G: Constant torque

C

YCB2200PV Series DC Variable Frequency Drive

Technical data

Input	rated voltage, frequency	Three-phase AC380V; 50/60Hz Single-phase AC220V; 50/60Hz	
	Voltage allows Range of changes	Three-phase AC360V~450V Single-phase AC190V~250V	
Output	voltage	0~460V,0~260V	
	frequency	Vector control: 0~500Hz V/F control: 0~500Hz	
	Overload capacity	Model G: 150% rated current for 60s; 180% rated current for 3s. P-type machine: 120% rated current 60s; 150% rated current for 3s.	
Control mode	V/F control, speed sensorless vector control (SVC)		
Control characteristics	Frequency setting resolution	Analog input	Maximum Frequency ×0.025%
		Digital settings	0.01Hz
	V/F control	V/F curves	Three ways: straight; Multi-point type; N-power V/F curve (1.2 power, 1.4 power, 1.6 power, 1.8 power, 2 power)
		V/F separation	2 ways: fully separated, semi-separated
		Torque boost	Manual setting: 0.0~30.0% of rated output Automatic lifting: Automatically determines the lifting torque according to the output current and combined with the motor parameters
		Automatic current and pressure limiting	Whether it is in the process of acceleration, deceleration or stable operation, it can automatically detect the stator current and voltage of the motor, and suppress it within the allowable range according to the unique algorithm, so as to minimize the possibility of system fault tripping
Control characteristics	Inductive vector control 45	Voltage and frequency characteristics	Automatically adjusts the output voltage-to-frequency ratio based on motor parameters and a unique algorithm
		Torque characteristics	Starting torque:150% rated torque at 3.0Hz (V/F control) 150% of rated torque at 0.25Hz (without speed sensor vector control) Steady-state accuracy of operating speed: ≤±0.2% of rated synchronous speed Speed fluctuation: ≤±0.5% of rated synchronous speed Torque Response: ≤20ms (without speed sensor vector control)
		The motor parameters are self-determined	Without any limitations, the automatic detection of parameters can be completed under both static and dynamic conditions of the motor to obtain the best control effect
		Current and voltage suppression	The whole process of current closed-loop control, completely avoid current impact, with perfect over-current and over-voltage suppression function
	Under-voltage suppression during operation	Especially for users with low grid voltages and frequent fluctuations in grid voltages, the system can maintain the maximum possible operating time according to a unique algorithm and residual energy allocation strategy, even if it is below the allowable voltage range	

YCB2200PV Series DC Variable Frequency Drive

Typical features	Multi-speed and swing frequency operation	16-stage programmable multi-speed control, a variety of operating modes are optional. Swing frequency operation: preset frequency, center frequency adjustable, state memory and recovery after power failure	
	PID control RS485 communication	Built-in PID controller (frequency can be preset), standard configuration RS485 communication function	
	Frequency setting	Analog inputs	DC voltage 0~10V, DC current 0~20mA (upper and lower limits optional)
		Digital inputs	The operation panel setting, RS485 interface setting, UP/DOWN terminal control, and can also be set in various combinations with analog input
	Output signal	Digital output	1 Y-terminal open collector output, 1 DO high-speed pulse output (optional open collector output), and two programmable relay outputs (TA, TB, TC) with up to 58 meaning options
		Analog output	2 analog signal outputs, the output range can be flexibly set between 0~20mA or 0~10V, and the output of physical quantities such as set frequency and output frequency can be realized
	Automatic voltage regulation operation	According to the need, you can choose three modes: dynamic voltage stabilization, static voltage stabilization, and unvoltage stabilization to obtain the most stable operation effect	
	Acceleration, deceleration Time setting	0.0s~6500.0s can be set continuously, S-type and linear mode are optional	
	brake	Energy consumption brake	The starting voltage, differential voltage and braking rate of energy consumption braking can be adjusted continuously
		direct current brake	Shutdown DC braking starting frequency: 0.00~[F00.10] maximum frequency Braking time: 0.0~100.0s, braking current: 0%~100% rated current
	Low-noise operation		The carrier frequency is continuously adjustable from 0.5KHz~16.0KHz to minimize motor noise
	RPM tracking speed Restart the function		It can realize the functions of smooth restart and instantaneous stop and restart of the motor during operation
	counter		An internal counter for easy system integration
	Run the function		Upper and lower limit frequency setting, frequency jump operation, reverse operation limit, slip frequency compensation, RS485 communication, frequency increment and decrease control, fault self-recovery operation, etc
display	The control panel is displayed	run state	Output frequency, output current, output voltage, motor speed, set frequency, module temperature, PID setting, feedback amount, analog input and output, etc
		alarm content	There are 8 operating parameters recorded, including output frequency, set frequency, output current, output voltage, DC voltage, module temperature, power-on time, and running time when three faults are tripped
Protection features			Overcurrent, overvoltage, undervoltage, module failure, electronic thermal relay, overheating, short circuit, phase loss of input and output, abnormal tuning of motor parameters, internal memory failure, etc
environment	Ambient temperature		-10°C~+40°C (Ambient temperature is 40°C~50°C, please derate it)
	Ambient humidity		5%~95%RH, no condensation of water beads
	Surroundings		Indoor (no direct sunlight, no corrosive, flammable gas, no oil mist, dust, etc.)
	elevation		For derating above 1000 meters, derating 10% for every 1000 meters of elevation
structure	Ingress protection		IP20
	Cooling method		Air-cooled with fan control
Installation:			Wall-mounted, cabinet-mounted

YCB2200PV Series DC Variable Frequency Drive

Overall and mounting dimensions(mm)

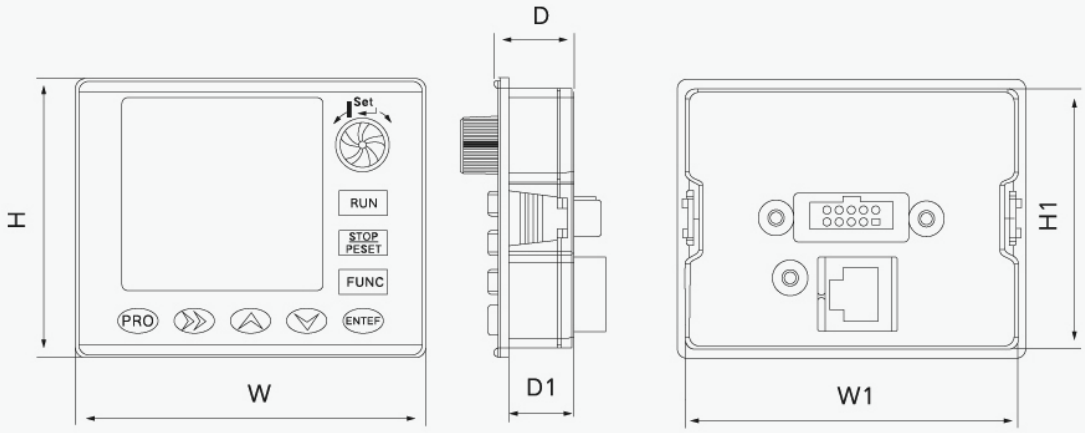

W	W1	H	H1	D	D1
74	70.4	59	55	17	14

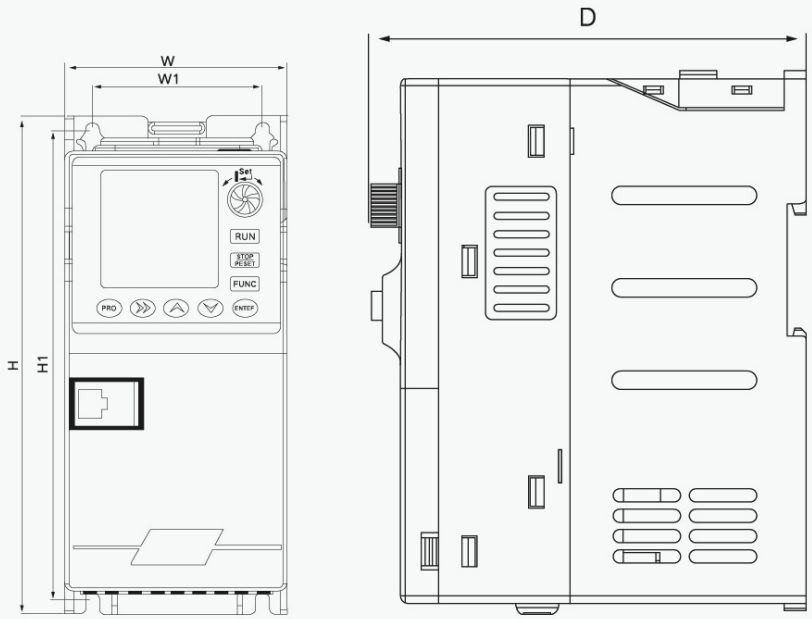

Overall and mounting dimensions(mm)

Models	H1(mm)	H2(mm)	W1(mm)	D1(mm)	H(mm)	W(mm)	D(mm)	Mounting holes (mm)
	Installation dimensions				Dimensions			
0.4kW-2.2kW	160.2	159	60	11	170	78	132.6	5
3.7kW-5.5kW	200	195	78	12.5	212	95	149.8	5
7.5kW-11kW	229	/	129	/	241.5	140	178.8	5.5
15kW-30kW	298	/	135	/	312	166	191.8	6
37kW	364	/	160	/	380	250	200	6
45kW-55kW	330	/	505	/	249	206	480	10
75kW-110kW	325	/	670	/	335	240	645	12

YCQR2 Soft Starter



General

AC squirrel-cage type asynchronous electric motor is a popular electric apparatus. By applying intelligence, the apparatus completes stable load making capacity and reduces impact strength to electrical network; it can work with stable and reliable performance. YCQR2 Model soft starter completes Human-machine interface. It can be applied to a scope of 5.5~500kW in thermal power plant, hydraulic power plant, metallurgy, chemical industry, architecture , cement plant ,mining industry as well as environmental protection projects. It's the ideal replacer of Y- △ Starter, reactor starter, auto-transformer starter etc.

The advanced technology applied prevents the heavy starting current of AC electric motor, influence to voltage quality and power consumption in loop as well as the impact strength to electric apparatus.

Microprocessor is the core of the YCQR2 soft starter. It controls big power thyristor components, to limit starting current, voltage ramp start, soft stop. Technical parameters can be set up to different load. It also has over current, overload and out-of-phase protections. Output voltage of soft start is ascending as per setups, then electric motor torque finishes starting according to optimized speed-up curve, thyristor components breaks, and bypass AC contact starts.

C



Functions

1. Double Single-chip machine automatic digital control;
2. Parameters like starting torsion current, voltage, and time to be set according to different load, to obtain optimal torque control feature.
3. Smooth and gradual starting process, to reduce the impact strength of electric network, vibration and noise of apparatus, to lengthen lifetime of mechanical driver and to improve working environment.
4. Starting current is adjustable as per load, to reduce starting consumption and to make optimal torque with smallest current.
5. Soft stop function – make long lifetime of electric contacts, meet mechanical requirements under various occasions.
6. Over-current protection, overload protection and thermal protection, outof–phase protection.
7. Extrocontrol interface to facilitate multi-functions: digital delayed start, transient stop control input, start output of time delay relay, fault relay output.
8. No special requirements on the phase sequence to input power.
9. Free stop and soft stop, soft stop time is adjustable.
10. Complete digital control and extrocontrol
11. Standard 485 interface
12. Output 0-20MA analog current
13. Innovative structure, small volume, stable performance, easy installation and operation.
14. Harvard type single-chip machine has strong anti-interruption capacity to prevent the control system from severe electric interruption.

YCQR2 Soft Starter

Technical data

Item No.	YCQR2
Electric motor power(400v.h)/kw	5.5-500kW
Rated working current Ie/A	10-1200
Rated working voltage / V	380V±15%
Frequency /Hz	50Hz
Continuous working current /A	115% Ie
Rated control voltage/V	AC 220V-240V/50Hz
Ambient temperature /°C	30°C/55°C

Item		Set Range	Factory Value	Illumination
Code	Name			
0	Start Voltage	30-80%	30%	Voltage mode effective
1	Rising Time	0-60S	10S	Voltage mode effective
2	Soft Stop Time	0-60S	2S	Stop freely when set as 0
3	Start Delay	0-240S	0S	Two lines way effective
4	Limiting Start Current	150-500%	250%	Limiting current mode effective
5	Interlock Delay	0-240S	0S	
6	Transient Stop Set	0-1	0	0:yes 1:no
7	Restart After Transient Stop	0-1	0	0:yes 1:no
8	Control Mode	0-1	1	0:limiting current 1:voltage
9	Control Way	1-6	1	1:keyboard 2:outer control 3:keyboard+outer control 4:PC 5:PC+keyboard 6:PC+outer control
A	0-20mA	0-1	0	0:full scale(20mA)corresponding to 400% 1:full scale(20mA)corresponding to 130%
B	Display Mode	0-132	0	0:by percent of rated voltage XXX:actual rated power value
C	Local Address	1-30	0	For serial-port communication
D	Set Parameter Modification	0-1	0	0:yes 1:no
E	Overload Multiple Set	50-200%	150%	
F	Out-of-phase Protection	0-1	0	0:yes 1:no
EY	Modification Set Protection	The data should not be modified in this condition		
-A	Start And Rising Condition	1.displaying current value XXXA or percent of rate value. 2.Delay start time displays time EOTTT		
-A	Operation Condition			
-A	Soft Stop Condition			

Note:Values XO-9
Even if using the voltage mode,the limiting current is still effective,and its value is 400%.

YCQR2 Soft Starter

Wiring diagram

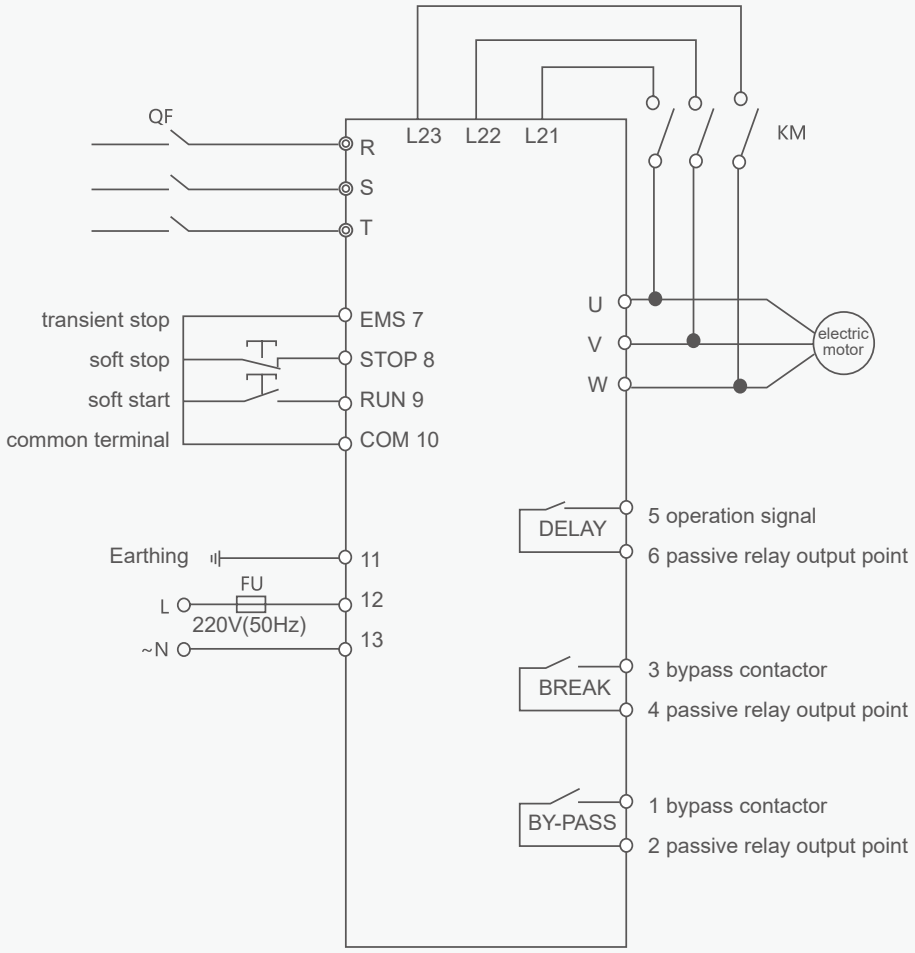

Overall and mounting dimensions(mm)

Plane Structure Picture And Size (see Picture 10.1and 10.2)
Plane Structure Picture Of Ycqr2 55kw Type

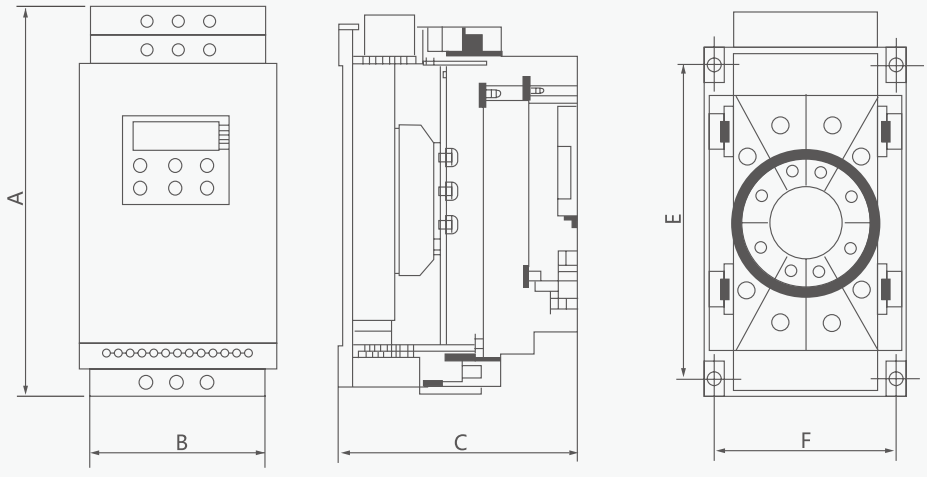

YCQR2 Soft Starter

YCQ2R 55kW Type

Model	Power (KW)	Rated Current (A)	Outline Size(mm)			Installing Size(mm)		Installing Hole Dimension
			A	B	C	E	F	
YCQR2	5.5-22	10-40	265	154	165	219	140	Φ6
YCQR2	30	54	265	154	165	219	140	Φ6
YCQR2	37	68	265	154	165	219	140	Φ6
YCQR2	45	80	265	154	165	219	140	Φ6
YCQR2	55	100	265	154	165	219	140	Φ6

C

YCQR2 75-500kW Type

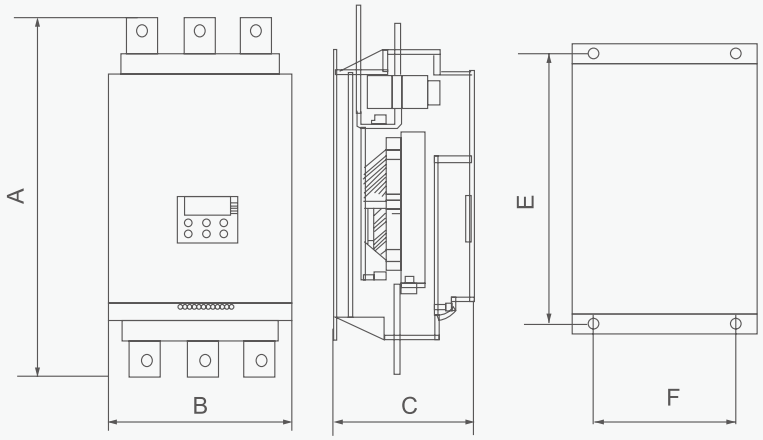

YCQR2 75-500kW Type

Model	Power (KW)	Rated Current (A)	Outline Size(mm)			Installing Size(mm)		Installing Hole Dimension
			A	B	C	E	F	
YCQR2	75	135	531	260	204	380	230	Φ8
YCQR2	90	160	531	260	204	380	230	Φ8
YCQR2	115	200	531	260	204	380	230	Φ8
YCQR2	132	250	531	260	204	380	230	Φ8
YCQR2	160	300	531	260	204	380	230	Φ8
YCQR2	200	360	564	290	204	260	260	Φ8
YCQR2	250	450	564	290	204	260	260	Φ8
YCQR2	320	560	564	290	204	260	260	Φ8
YCQR2	400	800	600	350	220	480	320	Φ8
YCQR2	500	1000	600	350	220	480	320	Φ8

YCQR7 Soft Starter



General

Read the YCQR7 installation instructions carefully before use. If you do not read the relevant instructions carefully, you will violate the relevant safety regulations, which may affect the normal use of the soft starter. To install the YCQR7, please prepare the following tools : small word screwdriver, wire cutter, wrench, etc.

Type designation

YC QR 7 □ □

- Voltage
- Power
- Design sequence number
- Soft-Starter
- Company code

Operating conditions

1. Incoming line power supply: AC 380V ± 5% 50/60 HZ
2. Power supply is applicable: mouse cage three-phase asynchronous motor
3. Cooling mode: forced air cooling
4. App licable temperature: -10°C ~ ± 40°C ,1°C,2%, + 50°C
5. App licable humidity: 90% without frost
6. Place of use: No corrosive gas without conductive dust indoor is well ventilated
7. Elevation vibration: The altitude is below 3000 meters, and the vibration power device is below 0.5G

YCQR7 Soft Starter

Technical data

Project name		performance index
Scope of application		3 phase rat cage asynchronous motor
Power bracket		5.5-450kW
Input voltage		380V ± 15%
Supply frequency		50/60Hz ± 5%
Overload capacity		400%60sec,120% continuous
Adjustable current multiple		From 1 to 5 times each time
Soft up time		1-90 Seconds
Module working mode		over a long period of time
Cooling-down method		forced air cooling
Secondary interace terminal	On-off input	3 Road
	Relay output	1 (programmable) or 3 (programmable)
	4-20MA	Route (extension is optional)
	RS485	1-way (extended as optional)
Protect		Short circuit speed break, overcurrent, overheat protection, reverse time overload, voltage phase deficiency, imbalance, transient stop, undervoltage, overvoltage, underload, starting failure, phase sequence error.
Host overload protection		Overload and reverse time limit, level 1 -5 is optional
Host current imbalance protection		Unbalanced trip standard: 5- 100% any two-phase unbalanced trip delay: 1-60 seconds can be set
Host short circuit protection		Quick break time . 0.18, can be set
Bus function		Interface : RS485 protocol · ModbusRTU
Human-computer interface		4 Line COG Screen
Language		Chinese, English

Technical data

Order number	Name	Set the scope	Windows default	Explain
Soft-up parameters				
A1	Start way	0~3	3	0: aging 1: voltage ramp 2: constant current3:current ramp
A2	Starting voltage	0~100%	45%	0,1,2 The starting mode is effective
A3	Initial current	0~2.5 Times	2.0 Times	Method 3 valid
A4	Flow limit multiple	1.8~6.0 Times	3.5 Times	Method 1,2,3 valid
A5	Sudden jump peak	0~100	90%	
A6	The jump cycle	0~2.0S	0.4S	
A7	Start delay	0~240.0S	0.0S	Delayed start time
A8	Soft up time	0~90.0S	20.0S	All starting modes are valid
A9	Soft stop time	0~60S	0S	Set to 0 no soft stop function, non-0 valid
A10	Joint control delay	0~240.0S	0.0S	Start the delay relay output, use with programmable relay
A11	mode of operation	0~6	3	0: Full open 1: keyboard 2: external control 3: keyboard + external control 4: Communication 5:Communication + keyboard 6:communication + external control
A12	Rated current	0~Current limit	100A	Set according to the rated current on the motor nameplate
A13	Upper limitcurrent	0~200%	120%	The relay is set to feed effectively
A14	Lower limit current	0~120%	90%	The relay is set to feed effectively
A15	actuation time	0~10.0S	1.0S	The relay is set to feed effectively
A16	Soft startplus time	0~60.0S	0	"Soft start time" does not complete the start, automatic extra time
A17	Soft strength	2.0 Times	0	"Soft start time" does not complete the start, automatic extra time
Protection parameters				
A18	Short circuit multiple	0~12.0 Times	5.5 Times	Set greater than (current limit multiple + soft starting force + 0.5), the whole process is effective
A19	Speed break time	0~2.00S	0.20S	Short circuit block (break) time
A20	Overflow multiple	0~8.0	1.2	Bypass effective
A21	Overflow time	0~60.0S	10.0S	If the overflow exceeds this value, block the silicon
A22	Overheat time	0~60.0S	10.0S	When oyerheating exceeds this value, blocking the SCR,the whole process is effective
A23	Overload curve	1~6	1	Motor reverse time limit protection, reverse time limit curve number, the larger the value, the longer the time, bypass (full pressure) after the effective
A24	Lack of phase time	0~60.0S	10.0S	If the voltage phase deficiency exceeds this value,the SCR is blocked, and the whole process is effective
A25	Current imbalance	0~100%	30%	Current imbalance ratio, soft rise, bypass, soft stop effective
A26	Imbalance time	0~60.0S	5.0S	If the accumulated time of imbalance exceeds this value, block the silicon controller
A27	Underpress ure lower limit	0~100%	70%	Full effective
A28	Overpressure time	0~60.0S	2.0S	If the accumulated time of underpressure exceeds this value, the thyristor is blocked
A29	Overpressure upper limit	0~150%	120%	Full effective
A30	Overpressure time	0~60.0S	2.0S	If the cumulative time of overpressure exceeds this value,the thyristors is blocked
A31	Under-load current	0~100%	50%	Lower undercurrent, bypass and full pressure effective
A32	Adue time	0~30.0s	2.0s	If the cumulative time exceeds this value, the thyristor is blocked

C

Order number	Name	Set the scope	Windows default	Explain
		Protection switch		
A33	Short-circuiting switch	Close, open	Open	Output short-circuit protection is enabled or prohibited
A34	Overflow switch	Close, open	Open	Overcurrent protection enables or forbids
A35	Overheat awitch	Close, open	Open	Overheat protection enables or prohibited
A36	overload cut-out	Close, open	Open	Motor overload protection is enabled or prohibited
A37	Lack of phases witch	Close, open	Open	Input voltage phase absence protection enabled or prohibition
A38	Imbalance switch	Close, open	Open	Current imbalance (output phase deficiency) protection enabled or prohibition
A39	Instantaneo us stop switch	Close, open	Open	External instantaneous stop fault protection enabled or prohibited, enabling can be set to self-recovery
A40	Undervoltag e switch	Close, open	Open	Input voltage protection enabled or prohibited
A41	Overvoltage switch	Close, open	Open	Input voltage overvoltage protection enable or prohibited
A42	Starting failure	Close, open	Open	Motor is not enabled or prohibited by full speed protection during bypass (or full pressure)
A43	Underload switch	Close, open	Open	Underload protection is enabled or prohibited
A44	Phase sequence switch	Close, open	Open	Phase order error protection enables or prohibition
		Communication parameters : not considered when not used		
A45	principal and subordinate	0,1,2	0	0:Close 1:Host 2:slave
A46	Stop number	0~32	1	
A47	Digit capacity	0~12	8	Usually set to 8
A48	Stop bit	0~2	0	Usually set to 1
A49	Even-odd check	0~2	1	Usually set to 0
A50	Baud rate	0~96	8	Actual baud rate-baud rate*1200
A51	Current range	0~600	1000	4 mA corresponds to 0 and 20 macorresponds to range values
		Control		
A52	Customer privilege			Password 10, go to the customer privilege menu
A53	Manufacturer setting			Password 111,enter the manufacturer setting menu

YCQR7 Soft Starter

Wiring diagram

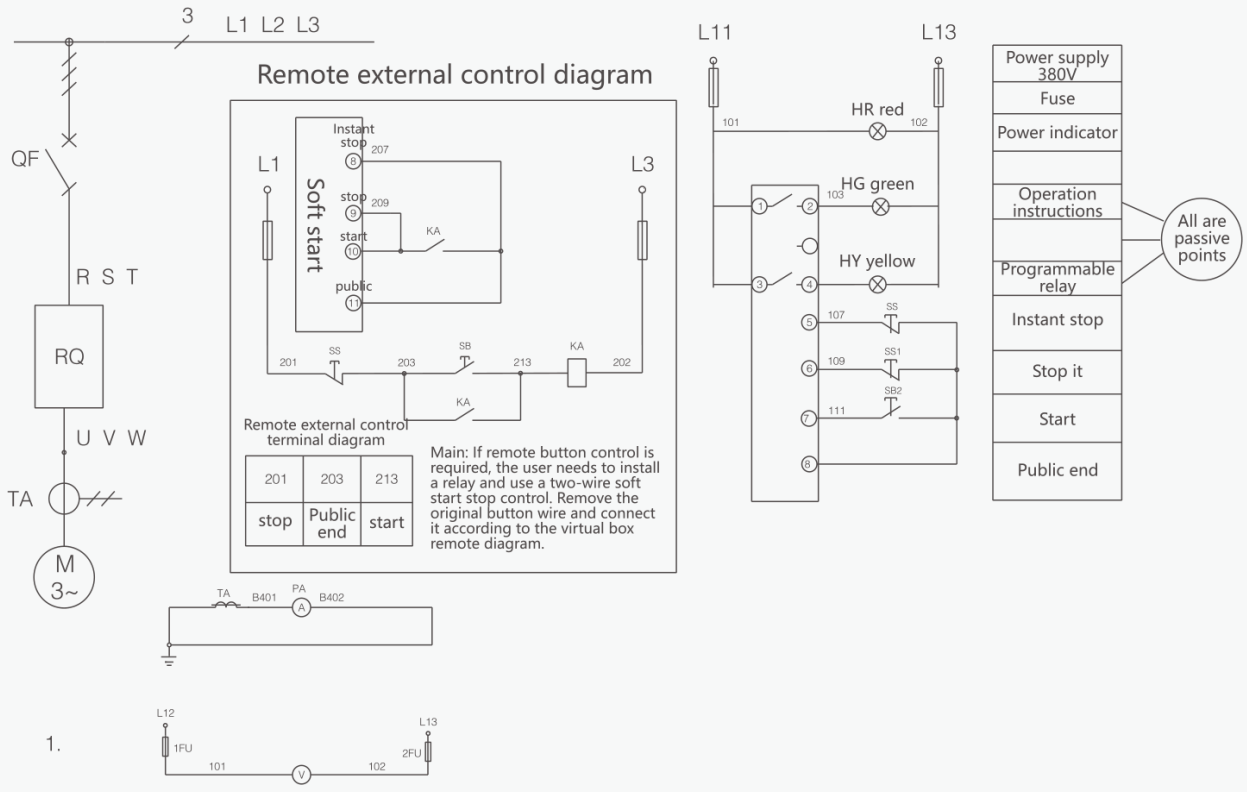

Overall and mounting dimensions(mm)

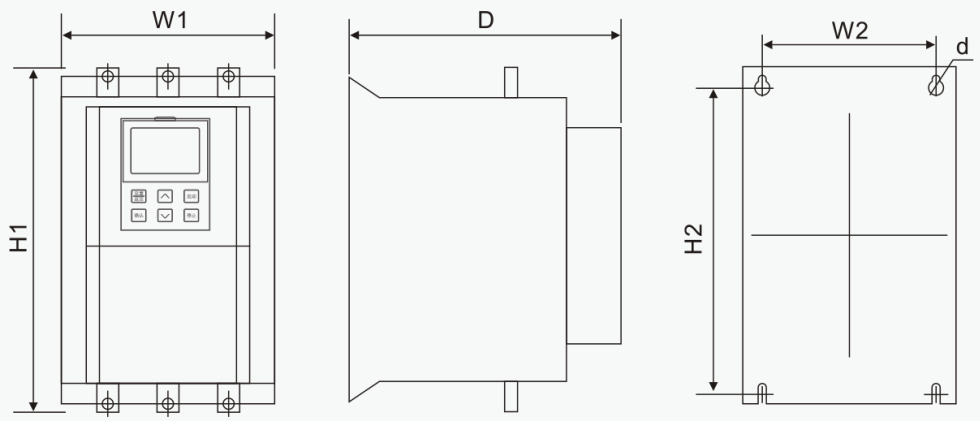

Specifications and models	Overall dimensions(mm)			Installation size(mm)		
	W1	H1	D	W2	H2	D
5.5kW-37kW	105	240	170	85	214	M6
45kW-75kW	150	280	179	117	240	M6
90kW-115kW	200	370	214	168	328	M6

YCQR8 Bypass Soft Starter



General

The main function of the built-in bypass soft starter is to reduce the pressure on the motor during startup by controlling the voltage and current changes, thereby increasing startup efficiency and extending the motor's lifespan. The built-in bypass soft starter typically includes bypass contactors and control power supplies, enabling a smooth transition to bypass mode during startup to prevent the motor from experiencing excessive current and voltage shocks.

Type designation

YC QR 8 □ □

- Voltage
- Power
- Design sequence number
- Soft-Starter
- Company code

Operating conditions

1. Incoming line power supply: AC 380V ± 5% 50/60 Hz
2. Power supply is applicable: mouse cage three-phase asynchronous motor
3. Cooling mode: forced air cooling
4. App licable temperature: -10°C ~ ± 40°C ,1°C,2%, + 50°C
5. App licable humidity: 90% without frost
6. Place of use: No corrosive gas without conductive dust indoor is well ventilated
7. Elevation vibration: The altitude is below 3000 meters, and the vibration power device is below 0.5G

Technical data

project name	performance index
Adaptation power range	The built-in bypass soft starter of YCQR8 series is adapted for power ranging from 5.5 to 630 kW.
Starting method	Supports multiple starting methods, including current-limiting start and voltage ramp start. It is also capable of applying programmable jog start and start current limiting under each method.
Protection functions	Equipped with various protection functions, including overcurrent protection, input/output phase loss protection, thyristor short-circuit protection, overheat protection, leakage detection, electronic thermal overload protection, etc.
Communication functions	Some built-in bypass soft starters support MODBUS-RTU communication, allowing connection with up to 32 devices, and enabling automatic communication through setting baud rate and communication address.
Adaptive power frequency	The built-in bypass soft starter features adaptive power frequency for 50/60Hz.
Other parameters	It has a 4-20mA current output function, suitable for various industrial environments, with strong anti-interference capabilities and easy adjustment methods

YCQR8 Bypass Soft Starter

Function description

Terminal wiring

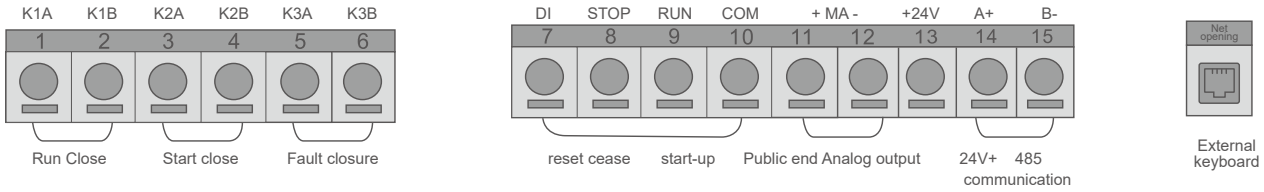

C

Classification	Terminal markings	Terminal name	Function Description
Contact out put(assive)	1,2	Start to the topNo delay inputOut (closed)	The built-in bypass soft starter of YCQR8 series is adapted for power ranging from 5.5 to 630 kW. 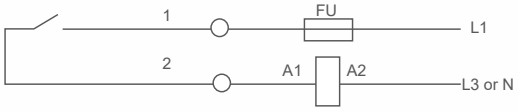
	3,4	Initiate a mission Lingshi (closed)	Supports multiple starting methods, including current-limiting start and voltage ramp start. It is also capable of applying programmable jog start and start current limiting under each method.
	5,6	Fault occurs Time(closed)	Equipped with various protection functions, including overcurrent protection, input/output phase loss protection, thyristor short-circuit protection, overheat protection, leakage detection, electronic thermal overload protection, etc.
Contact input(Active)	7	Instantaneous stop input	Some built-in bypass soft starters support MODBUS-RTU communication, allowing connection with up to 32 devices, and enabling automatic communication through setting baud rate and communication address.
	8	Soft stop input	The built-in bypass soft starter features adaptive power frequency for 50/60Hz.
	9	Start Input	Supports multiple starting methods, including current-limiting start and voltage ramp start. It is also capable of applying programmable jog start and start current limiting under each method.
	10	Public end	Equipped with various protection functions, including overcurrent protection, input/output phase loss protection, thyristor short-circuit protection, overheat protection, leakage detection, electronic thermal overload protection, etc.
Analog quantity output	11,12	Analog output	11,12 can measure the current signal that changes with the load, output 4-20mA, or 0-20mA optional,calibrationValue 100,calculation formula:D= $\frac{100}{16}$(Ix-4). Where Ixis the actual16measured current value (mA),and D is the motorLoad current (%)(can also be understoodas the rated current corresponding to the soft start setting of 20mA)
DC voltage output	13(24V+) 10(COM)		Can carry a 0.2A DC load, with 13 (24V+)as the positive pole of thepower supply and 10(COM)as the negative pole of the power supply
485 communi-cation	14,15		Please refer to 485 communication protocol for details

(1). Contact input terminal

a. Use external terminals to control the start and stop fuctions of the soft starter. Please set the start stop control to I (keyboard+terminal).

b. If remote control requirements are required, it is recommended to use the (second line) control method.

c. The input terminal and common terinal of the contact signal are generally in an 0N/0rF action, which can cause interference in soft start-ersmotors, and wiring, therefore wiring is necessaryPlease use shielded wires for cables that are as short as possible (less than 20m).

d. The wiring of control terminals must be as far away as posible from the wiring of the main cireuit. 0therwise, it may cause erroneous actionsdue to interference.

2. External control wiring method

C

Three line control mode

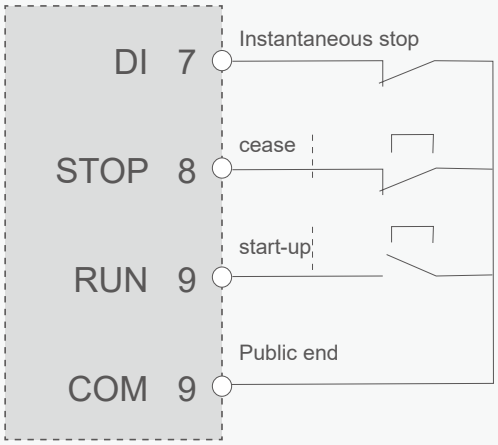

Control terminal wire 0.75~1.25mm²

Second line control mode

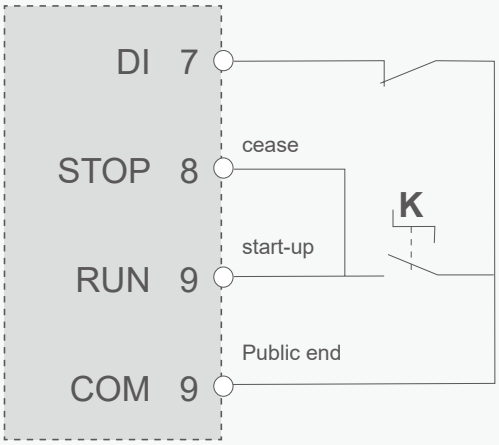

K is close to start running, open to stop

YCQR8 Bypass Soft Starter

3. Relay and remote control wiring diagram

Relay control mode

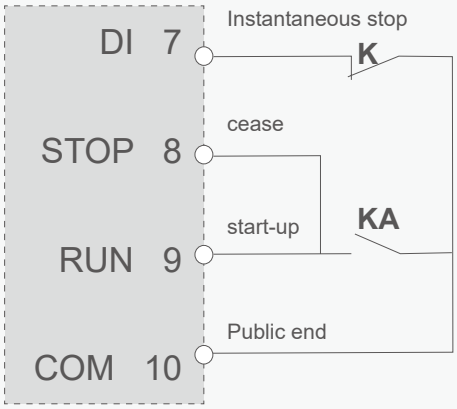

Remote control method

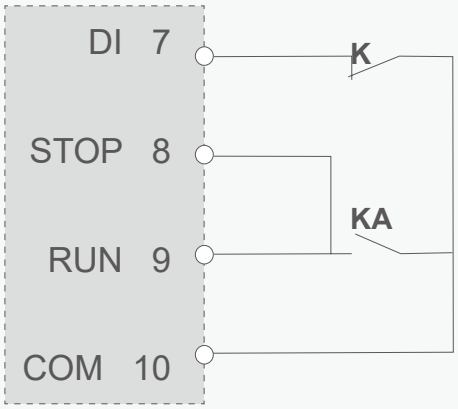

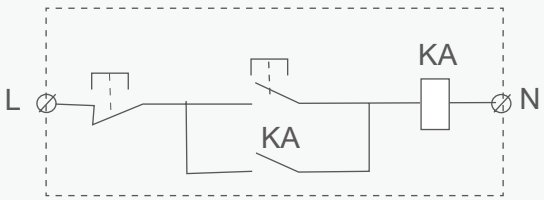

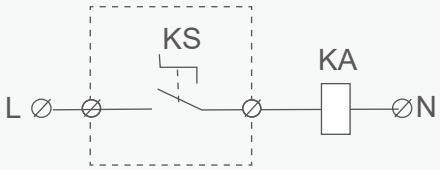

K is the normally closed point for connecting other protective devices (such as thermal protectors), which is short circuited when leaving the factory.

C

YCQR8 Bypass Soft Starter

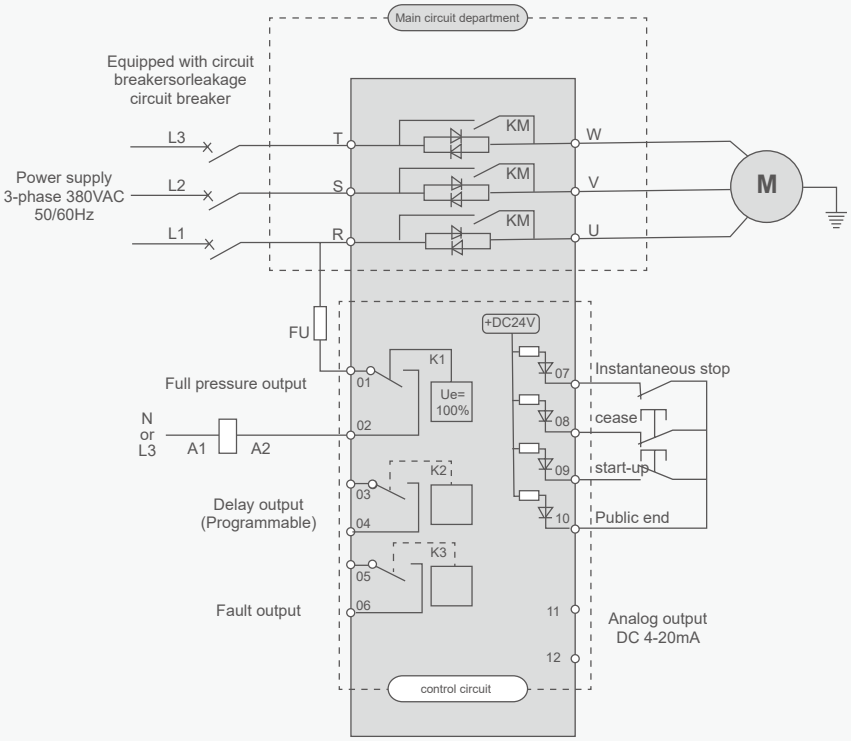



YCQR8 Bypass Soft Starter

Wiring diagram

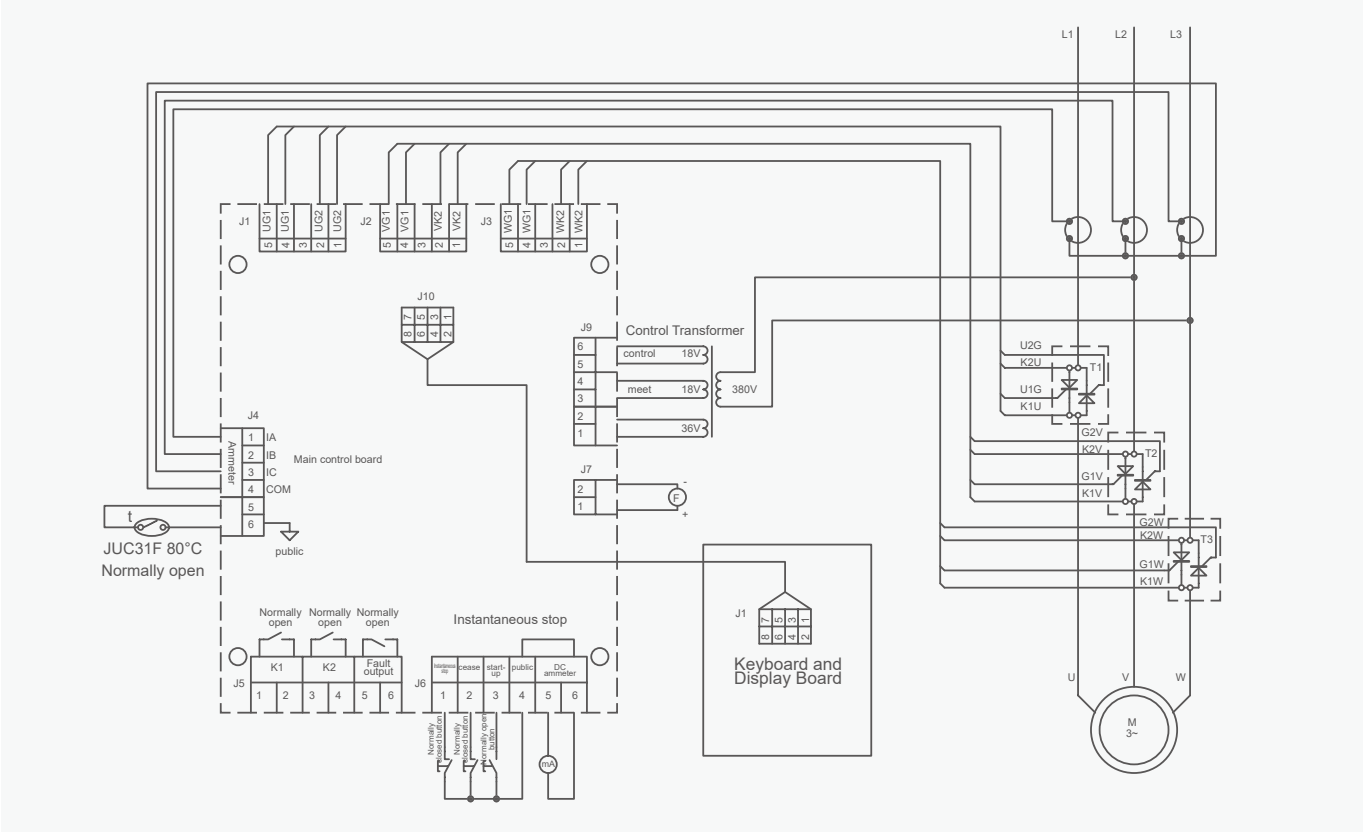

YCQR8 Bypass Soft Starter

C

Overall and mounting dimensions(mm)

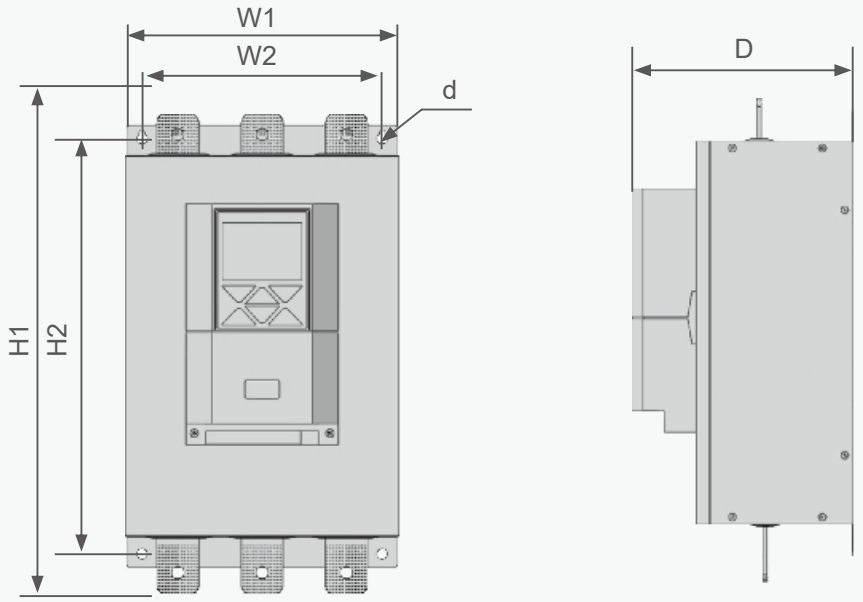

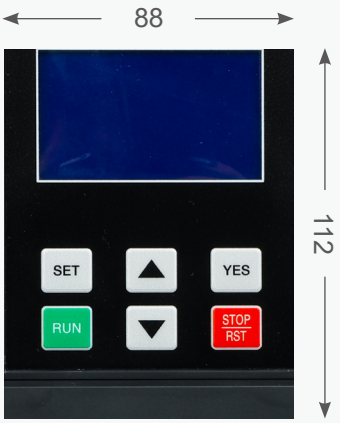

Model number	W1	H1	D
YCQR8-22kW-37kW AC220V	150	285	195
YCQR8-45kW-55kW AC220V	210	370	240
YCQR8-75kW-115kW AC220V	260	540	255
YCQR8-132kW-160kW AC220V	300	635	275
YCQR8-185kW-220kW AC220V	400	730	295
YCQR8-22kW-75kW AC380V	150	285	195
YCQR8-90kW-115kW AC380V	210	370	240
YCQR8-132kW-220kW AC380V	260	540	255
YCQR8-250kW-350kW AC380V	300	635	275
YCQR8-400kW-500kW AC380V	400	730	295

YCQR8s Bypass Soft Starter



General

This soft starter is an advanced digital soft start solution suitable for motors with power ranging from 0.37kW to 115kW. Provides a complete set of comprehensive motor and system protection functions, ensuring reliable performance even in the harshest installation environments.

Type designation

Company code		/	Current	Voltage
YC	-	QR8s	30	AC380V
Company code		Model	30kW	AC380V

Operating condition

1. Ambient temperature: -40°C~+65°C
2. Relative humidity: ≤20% at 40°C; ≤90% at 20°C
3. Altitude: ≤2000m
4. Environmental conditions: no harmful gases and vapors, no conductive or explosive dust, no severe mechanical vibration

YCQR8s Bypass Soft Starter

Technical data

Optional soft start curve

- Voltage ramp start
- Current Limit Start

Optional soft stop curve

- Free parking
- Timed soft parking

Expandedinput and output options

- Remote controlinput
- Relay output
- RS485 communication output

Models that meet aconnectivity re-quirements

- 0.37-115kW(rated)
- 220VAC-380VAC
- Star shaped connection or innertri-angle connection

Customizable protection

- Input phase loss
- Output phaseloss
- Running overload
- Starting overcurrent
- Running overcurrent
- Underload

Easy to read display with comprehensive feedback

- Removable operation panel
- Built-in Chinese + English display

YCQR8s Bypass Soft Starter

Instructions for External Terminalsof Built in Bypass intelligent Motor Soft Start

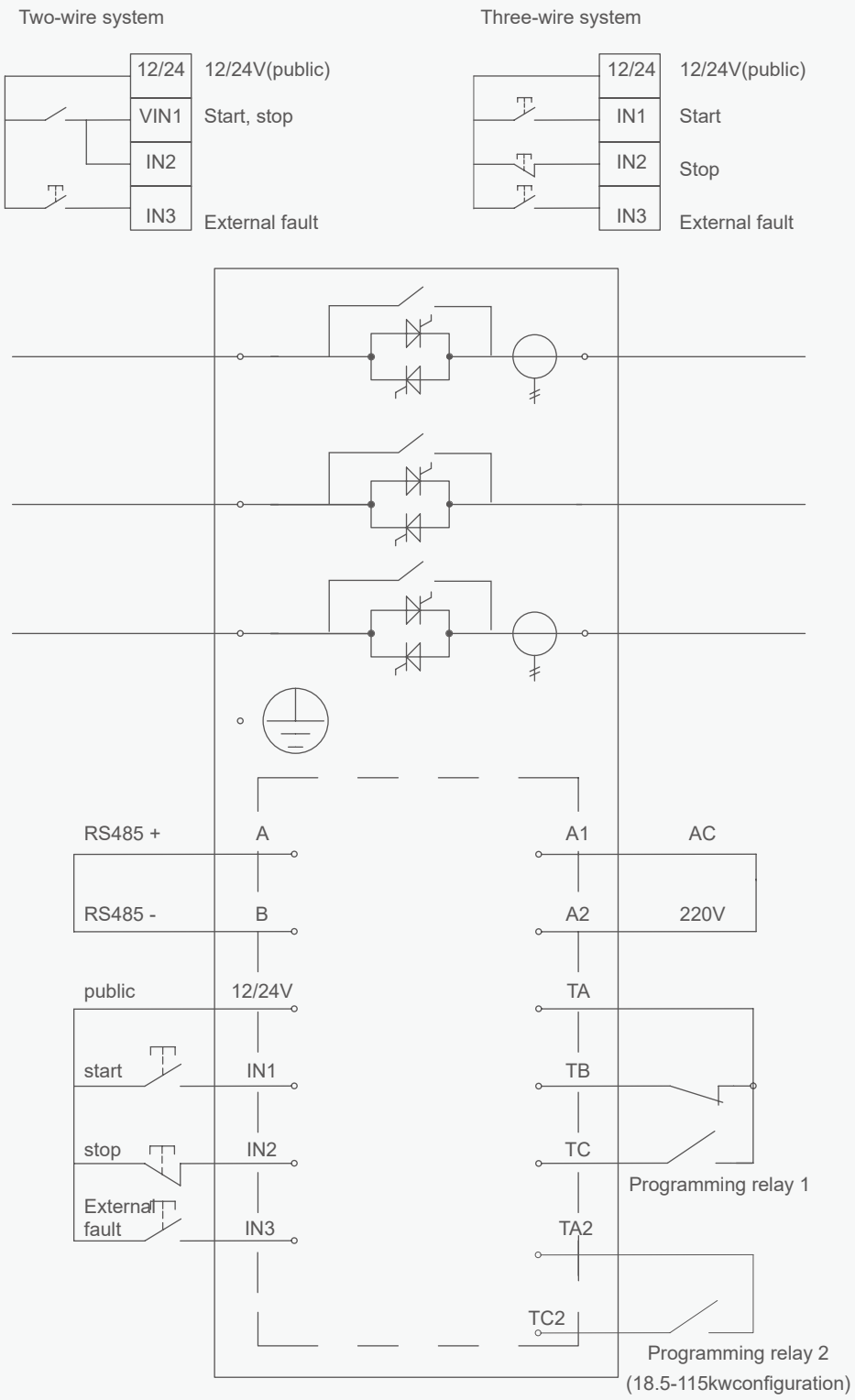

C

YCQR8s Bypass Soft Starter

Terminal type		Terminal No.	Terminal name	Instruction
Main circuit		R,S,T	Power input	Soft start three-phase AC powerinput
		U,V,W	Soft Start Output	Connect three-phase asynchronous motor
Controlloop	Communication	A	RS485+	For ModBusRTU communication
		B	RS485-	
	Digital input	12V	Public	12/24Vcommon
		IN1	start	Short connection with common terminal (12/24V) Startable soft start
		IN2	Stop	Disconnect from the common terminal (12/24V) to stop the start soft start
		IN3	ExternalFault	Short-circuit with the common terminal (12/24V) , soft start and shutdown
	Soft start power supply	A1	AC220V	220V
		A2		
	Programming Relay 1	TA	Programming relay common	Programmable output, available from Choose from the following functions: 0. No action 1.Power-on action 2. Soft start action 3.Bypass action 4. Soft stop action 5.Runtime actions 6.Standby action 7. Failure action
		TB	Programming relay normally closed	
		TC	Programming relay normally open	
	Programming Relay 2 18.5-115kw (Configuration)	TA2	Programming relay normally open	
		TC2		

YCQR8s Bypass Soft Starter

Overall and mounting dimensions(mm)

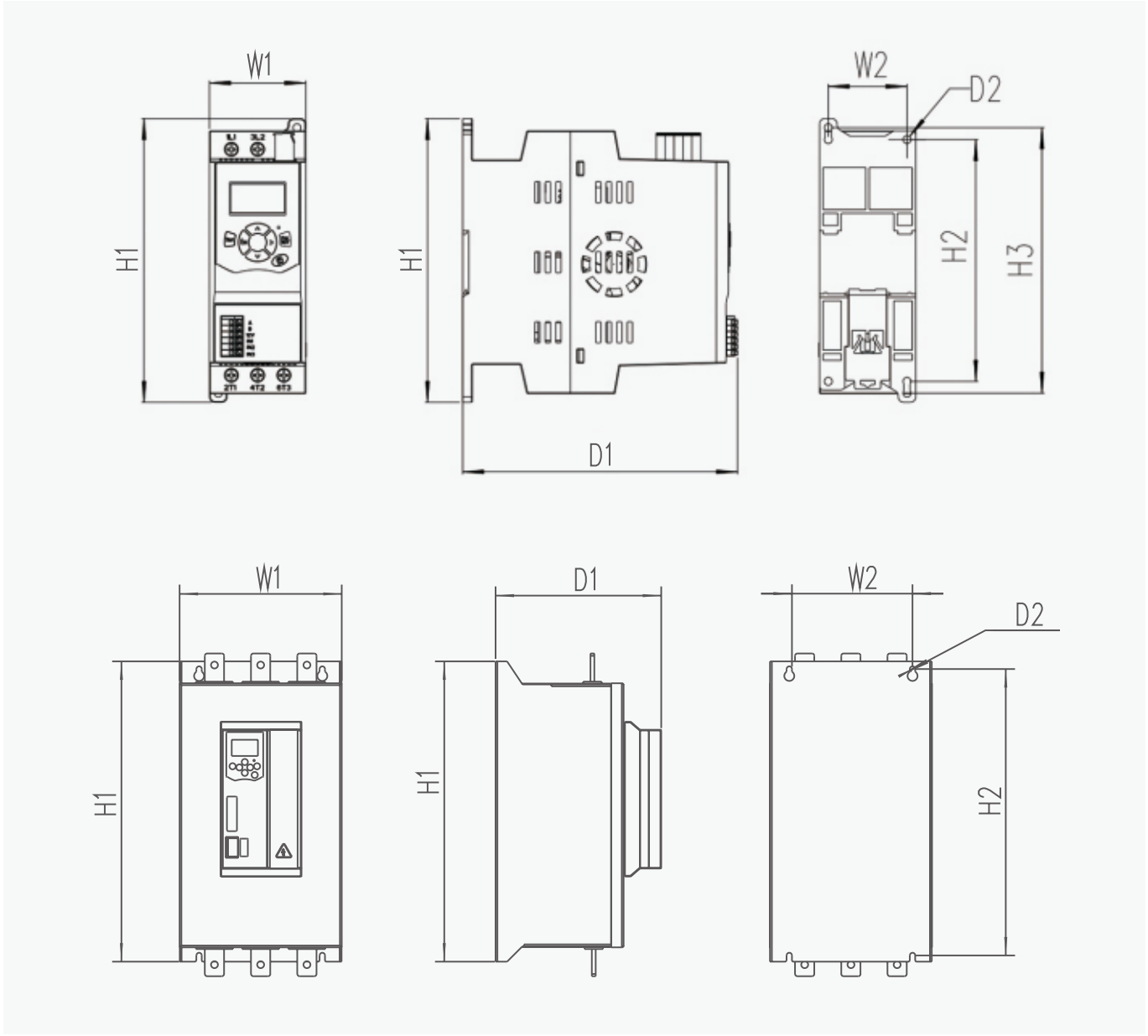

Specification model	Dimensions(mm)			Installation size(mm)			
	W1	H1	D1	W2	H2	H3	D2
0.37-15kW	55	162	157	45	138	151.5	M4
18-37kW	105	250	160	80	236		M6
45-75kW	136	300	180	95	281		M6
90-115kW	210.5	210.5	215	156.5	372		M6

JD-5, JD-6 Motor Integrated Protector



General

JD-5, JD-6 Motor Integrated Protector (hereinafter referred to as protector) is applicable for overload and phase-failure protection of AC motor @ A.C.50Hz, less than AC690V rated insulation voltage and 20A~300A rated operating current for its continuous working or dis-continuous working. Protector and AC contactor are generally used cooperatively.

This product meets the requirements of IEC 60947- 4-1.

Operating condition

1. Altitude ≤2000m.
2. Ambient temperature Range: -5°C ~ +40°C, with daily average ≤ +35°C.

   Atmospheric condition: when the highest temperature is +40°C, the relative humidity of air shall be no more than 50%, higher relative humidity shall be allowable at lower temperature, for instance air humidity may reach 90% at +20°C. As for dews, which con-tigently appear due to change of temperature, special steps should be taken.
3. Pollution Level: Level 3.
4. Inclination between installation plane and vertical plane shall ≤±5°.
5. In the media without explosive risk, and no gases that may be corrosive to metal and damage insulation in the media together with at places where much conducting dust being in existence.
6. At places where rain & snow proof facilities are equipped with and not being full of steam.
7. At places without prominence rock, impact and vibration.
8. Installation Category: III.

Technical data

Rated insulation voltage AC690V, rated frequency 50Hz, rated operating current 0.5A~300A.

Parameter \ Model	JD-5	JD-5B (with buzzer)	JD-6	BHQ-S-C	BHQ-S-J
Rated Voltage	AC380V 50Hz(Other voltage levels can be customized)				
Setting current range (suitable motor power)	2-80A (1-40kW)	2-80A (1-40kW)	60-300A (30-150kW)	20-80A, 63-150A 100-250A	0.5-5A 5-20A
Overload action time (with inverse time limit haracteristics)	3-300s (Adjustable)				
Phase failure action time	≤2s				
Reset Mode	De-energizing reset				
Contact capacity	AC380V 3A				
Display mode	LED Light indication				
Alarm mode	Sound-light alarm				
Mechanical life	10^6				
Electric life	10^5				
Installation mode	Screw				

JD-5, JD-6 Motor Integrated Protector

Technical data

Operation characteristics under three-phase balanced-load status

I/In	Operating time	Test condition	Ambient temperature
1.05	<2h non-tripping	Cold status	+20°C
1.20	<2h tripping	Hot status	
1.50	<2 min tripping	Hot status	
7.20	2s<Tp≤10s	Cold status	

Operation characteristic under phase-failure status

Multiple of setting current		Operating time	Test condition	Ambient temperature
Any two phases	The Third phases			
1.0	0.9	<2h non-tripping	Cold status	+20°C
1.15	0	≤5s	Hot status	

C

Wiring diagram

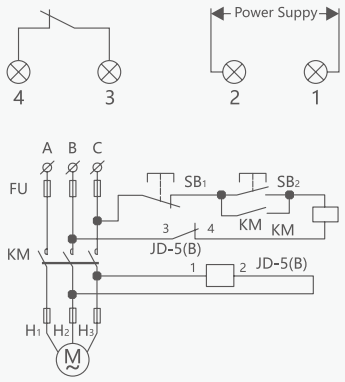

JD-5, JD-5B, BHQ-S-J, BHQ-S-C(20~80A)

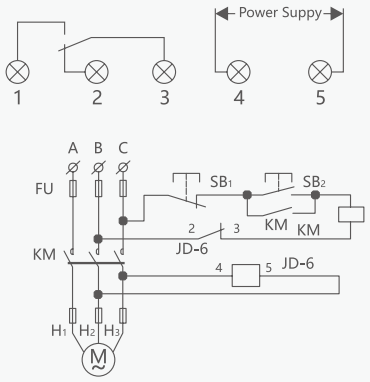

JD-6, BHQ-S-C(63~150A, 100~250A)

Overall and mounting dimensions (mm)

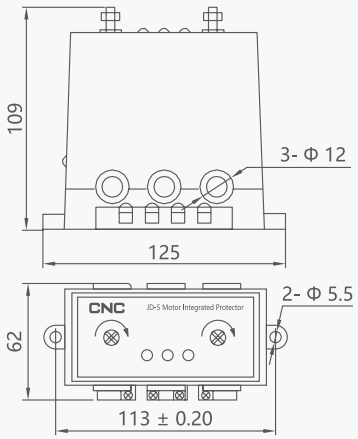

JD-5(B), BHQ-S-J, BHQ-S-C (20~80A)

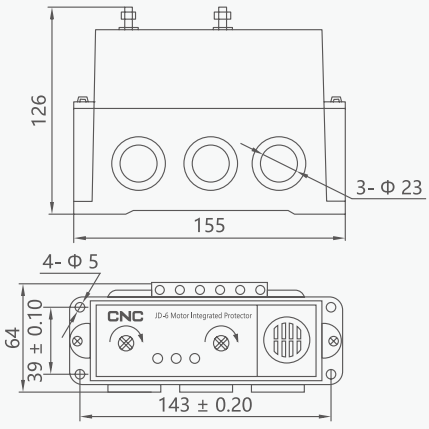

JD-6, BHQ-S-C (63~150A, 100~250A)

JD-8 Motor Integrated Protector



C

General

JD-8 Motor Integrated Protector is mainly applicable to fault protection of overload and phase failure of low-voltage three-phase AC asynchronous motor in electric power system with AC frequency 50Hz and rated insulation voltage less than 690V. The protector is usually matched with the contactor in AC motor loop circuit for use. It conforms to IEC 60947-4-1 standards.

Operating conditions

1. The altitude shall not exceed 2000m.
2. The ambient air temperature is -5°C~+40°C and the average temperature within 24h shall not exceed +35°C.
3. Atmospheric condition: Relative humidity of atmosphere shall not exceed 50% at temperature of +40°C,and higher relative humidity is allowed at lower temperature. For example, the air humidity can reach 90% at the temperature of +20°C. Special measures should be taken for occasional condensation caused by changes in humidity.
4. Class of pollution: Class III
5. Installation category: category III
6. The angle between the installation surface and the vertical surface shall not exceed ±5 degrees.
7. The place without obvious shake, impact and vibration shall be selected as the installation site.
8. The installation site shall conform to the following standards: explosive and dangerous medium, no gas capable of corroding and damaging insulation in the medium and less conductive dust in the medium.
9. The place with rain-proof and snow-proof equipment and a little water vapor shall be used as the installation site.

Technical data

Main circuit: rated insulation voltage AC690V, rated frequency 50Hz

Model	Range of setting current (A)	Power suitable for motor (kW)
JD-8	0.5~5	0.25~2.5
	2~20	1~10
	20~80	10~40
	64~160	32~80

Auxiliary circuit: rated insulation voltage AC380V, rated frequency 50Hz

Utility Category	AC-15	
Rated operating voltage (V)	220	380
Rated operating current (A)	1.5	0.95
Conventional thermal current (A)	5	

JD-8 Motor Integrated Protector

Protection features

Structure characteristics

- Three-phase electronic type
- Works for phase failure and overload protection(not suitable for reversible motor)
- Capable of continuously adjusting the set current
- The main circuit adopts pass-through-core type wiring method
- Installation method: installation via screws or rail

The protector has the following operating characteristics for load balance of each phase; the tripping level is level 30.

Multiple of setting current	Actuation time	Starting condition	Ambient air temperature
1.05	No actuation within 2h	Cold state	Room temperature (20±5)°C
1.2	Actuation within 2h	Heat state (the test is done following sequence 1)	
1.5	Actuation within 12min		
7.2	9s<tp≤30s	5	

Wiring diagram

Wiring diagram of control circuit with voltage AC220V

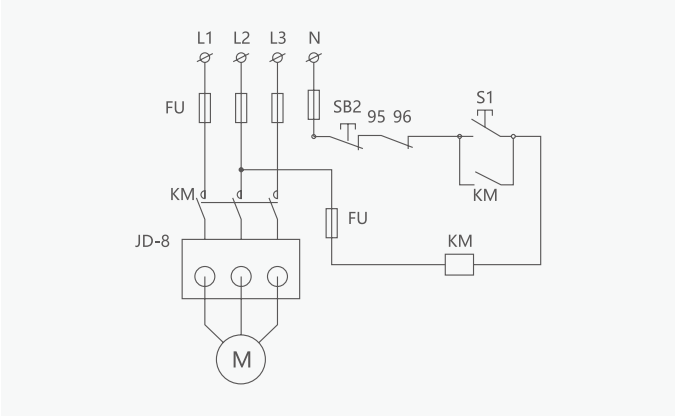

Wiring diagram of control circuit with voltage AC380V

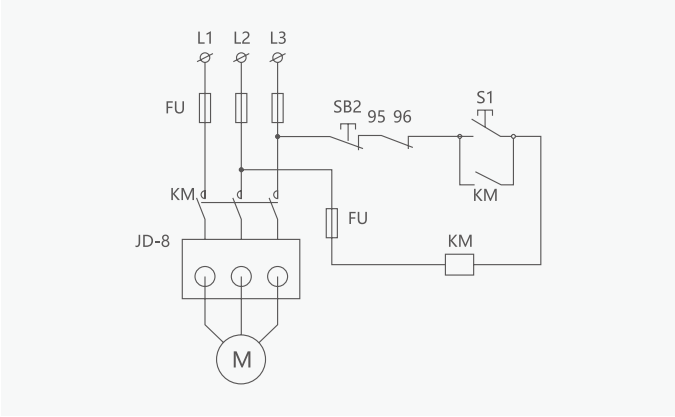

Overall and mounting dimensions(mm)

JD-8-5, JD-8-20, JD-8-80

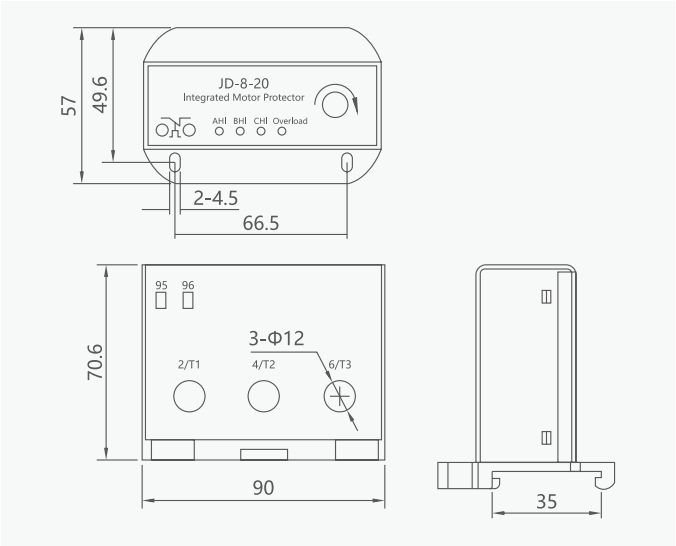

JD-8-160

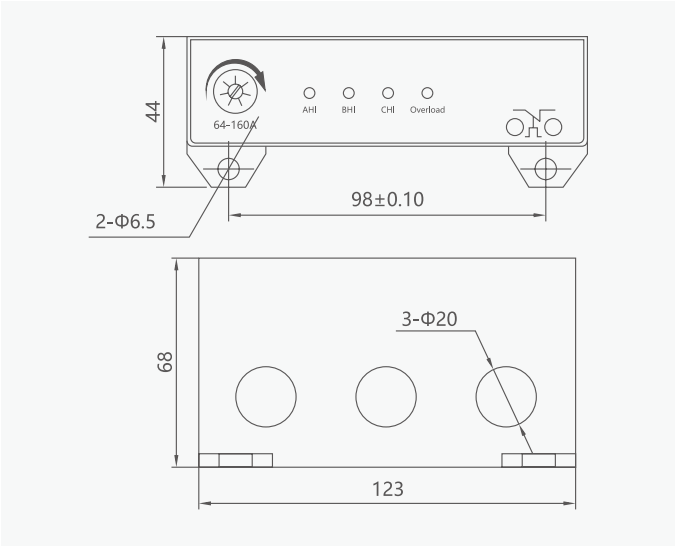

HG140 Semiconductor Heater(15W-150W)



General

The HG heater is used in the chassis to prevent water droplets from forming or the temperature from dropping below the minimum required value, avoiding rust and corrosion. The aluminum shell adopts a cylindrical design, which can evenly distribute heat. The clamp-type card slot wiring method simplifies installation and saves time.

Type designation

HG140/30W, aluminum material, length: 65mm

Product Model	Series	Current	Aluminum Material Length
HG	140	30W	Product L Length
Product Model	140:140 series, terminal wiring without cable 040:040 series, with cable	15:15W 30:30W 45:45W 60:60W 75:75W 100:100W 150:150W	65mm

Operating condition

1. Ambient temperature: -45°C~+70°C
2. Relative humidity: ≤20% at 40°C; ≤90% at 20°C
3. Protection rating:IP20

HG140 Semiconductor Heater(15W-150W)

Technical data

Function	Parameter
Working Voltage	120-240V AC/DC
Heating Element	PTC resistor, automatic regulation, temperature limitation
Heat Dissipater	Anodized extruded aluminum profile
Connection Mode	3 clamp-type card slots, suitable for standard wires 0.5-1.5mm
Connection Case	Suitable for UL94V-0 black plastic
Installation Method	35mm DIN rail clamping (EN50022)
Installation Direction	Vertical
Note	Other voltages can be customized, such as 24V/380V, etc.
	When the working voltage is lower than 140V (AC/DC), the heating performance is reduced by about 10%.



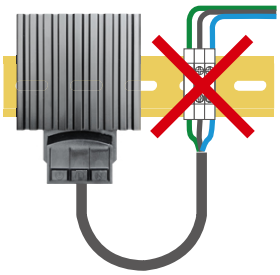

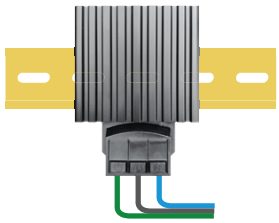

Overall and mounting dimensions(mm)

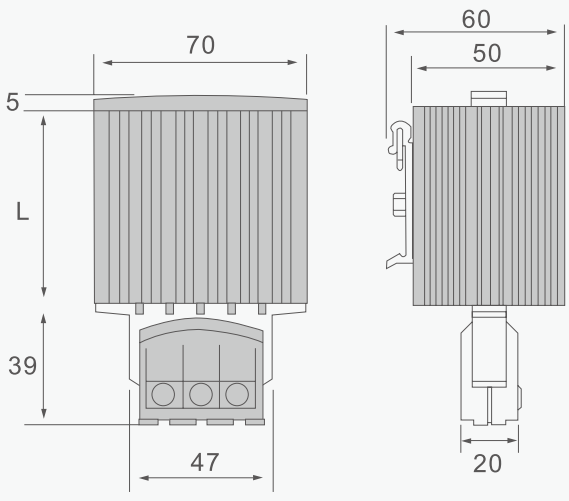

Power (W)	Length L (mm)	Weight (kg)
15	65	0.3
30	65	0.3
45	65	0.3
60	140	0.4
75	140	0.5
100	140	0.5
150	220	0.7

HGK Small Semiconductor Heater (10W-30W)



General

The HGK heater is mainly used for switch boxes to avoid condensation. When the temperature drops to below zero or the minimum required value, it can prevent rust and ensure the constant temperature inside the box.

Type designation

HGK047/10W, aluminum material, length: 50mm

Product Model	Series	Current	Aluminum Material Length
HGK	047	10W	Product L Length
Product Model	047: 047 Series	10W:10W 20W:20W 30W:30W	50mm 60mm 70mm

Operating condition

1. Ambient temperature: -45°C~+70°C
2. Relative humidity: ≤20% at 40°C; ≤90% at 20°C
3. Protection rating:IP20

HGK Small Semiconductor Heater (10W-30W)

Technical data

Function	Parameter
Working Voltage	120-240V AC/DC
Heating Element	PTC heating element with self-regulation and temperature control
Heat Dissipater	Anodized extruded aluminum profile
Installation Method	35mm DIN rail clamping (EN50022)
Installation Direction	Vertical
Note	Other voltages can be customized, such as 24V/48V, etc.

Overall and mounting dimensions(mm)

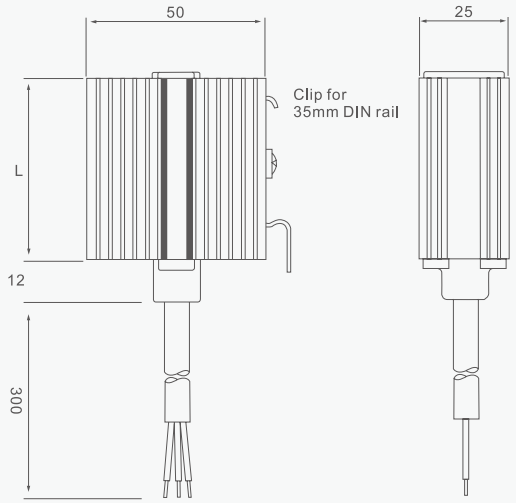

Power (W)	Length L (mm)	Weight (kg)
10	50	0.1
20	60	0.2
30	70	0.2

HGL Fan Heater (250W - 600W)



General

HGL compact fan heater can prevent water droplets from forming, provide strong air circulation, and stabilize the temperature in the switch box. When the fan fails, the safety switch will automatically cut off to stop the heater from continuing to heat.

Type designation

HGL046/250W

Product Model	Series	Current	Voltage
HGL	046	250W	220VAC
Product Model	046: 046 Series	250W:250W 400W:400W 500W:500W 600W:600W	220VAC

Operating condition

1. Ambient temperature: -45°C~+70°C
2. Relative humidity: ≤20% at 40°C; ≤90% at 20°C
3. Protection rating:IP20

HGL Fan Heater (250W - 600W)

Technical data

Function	Parameter
Heating Principle	Resistive heater
Temperature Safety Cut-off	Prevents heater overheating in case of fan failure
Heat Dissipater	Anodized extruded aluminum alloy
Surface Temperature	Up to 90°C at 400W
Connection Case	Suitable for UL94V-0 black plastic
Installation Method	35mm DIN rail clamping (EN50022)
Note	500W and 600W can be customized
	For 24V DC and 48V DC fan heaters, a conversion relay is required. Electronic relays are recommended.

Overall and mounting dimensions(mm)

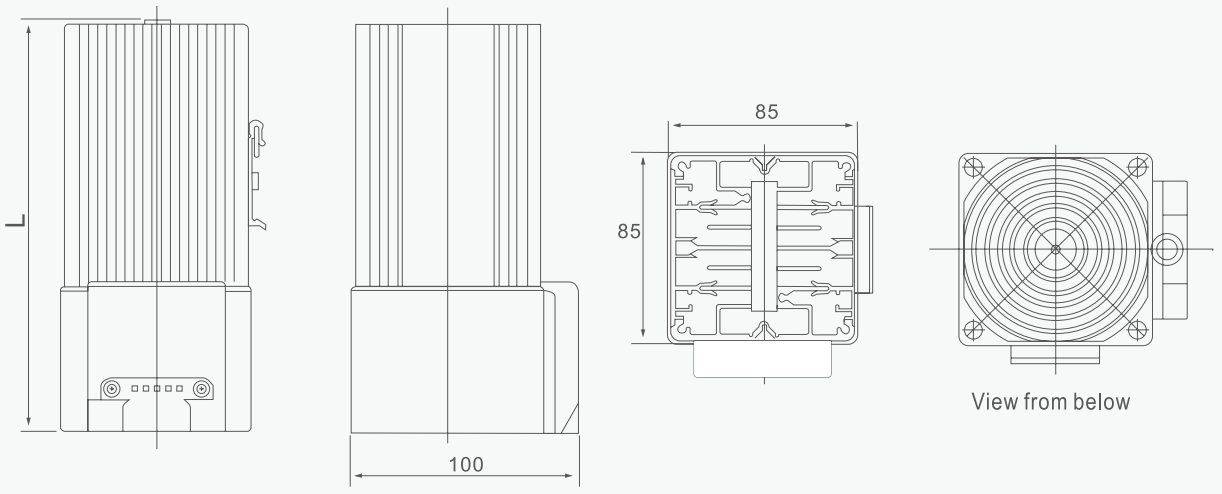

Operating Voltage	Power (W)	Length L (mm)	Weight (kg)
230V AC,50/60Hz	250	182	1.1
230V AC,50/60Hz	400	222	1.4
120V AC,50/60Hz	250	182	1.1
120V AC,50/60Hz	400	222	1.4
24V DC	250	182	1.1
48V DC	250	182	1.1
48V DC	400	222	1.4

YCKB7 Control and protection switchgear



General

The YCKB7 series control and protection switchgear (hereinafter referred to as “switch” or CPS) is mainly used in AC systems with a frequency of 50Hz, a rated working voltage of 690V and below, and a rated working current of 1.2-63A for low voltage distribution and motor control and protection circuits.

It has the capability to protect against circuit overload and short circuits, with high breaking capacity. It also provides control functions for the connection and disconnection of circuit loads, and supports communication control for the switch’s operation, making it suitable for automatic control systems and remote control systems.

Standards: IEC 60947-1,IEC 60947-6-2

Type designation

YC KB7 - 63 / 63 M T

Company code		Shell frame		Current	Voltage	Controller type
YC	KB7	63	/	63	M	T
Company code	Control and protection switchgear	/		1.2:0.3-1.2A 2.4:0.6-2.4A 6:1.5-6A 12:3-12A 18:7.2-18A 32:12-32A 45:18-45A 63:25-63A	M:230V Q:400V	None:Standard type T:Com munication type

Operating conditions

1. Ambient temperature: -5°C~+40°C
2. Relative humidity: ≤50% at 40°C; ≤90% at 25°C
3. Altitude: ≤2000m
4. Environmental conditions: no harmful gases and vapors, no conductive or explosive dust, no severe mechanical vibration

YCKB7 Control and protection switchgear

Technical date

Main technical data (main circuit)

Serial number	Parameters			
1	Frame rating	63		
2	Rated operating voltage Ue	400V、690V		
3	Utilization category	AC-43,AC-44		
4	Conventional free air thermal current (Ith) (A)	12	32	63
5	Rated operational current (Ie) (A)	1.2,2.4,6,12	18,32	45,63
6	Rated frequency	50Hz		
7	Number of poles	3		
8	Rated duty type	Intermittent Duty		
9		Level 300, 40% Workload		
10	Rated short-circuit breaking capacity (Ics)	50KA(AC400V),4KA(AC690V)		
11	Breaking operation time	≤2ms		
12	Rated insulation voltage (Ui)	690V		
13	Rated impulse withstand voltage (Uimp)	6kV		
14	Electrical lifespan (AC-43) (10,000 operations)	100(AC400V)		
15	Mechanical lifespan (10,000 operations)	1000		

Main technical data (rated current and control power)

Serial number	Rated operational current Ie (A)	Overload setting current range Ir1 (A)	Controllable motor power Pe (kW)	
			400VAC	690VAC
1	1.2	0.3~1.2	0.07 ~ 0.5	0.13 ~ 0.86
2	2.4	0.6~2.4	0.15 ~ 1.0	0.25 ~ 1.8
3	6	1.5~6	0.52 ~ 2.8	0.9~5.0
4	12	3~12	1.1~6.0	2.0~10
5	18	7.2~ 18	3.0~ 9.5	5.0~ 16
6	32	12~32	5.0 ~ 16.5	8.5 ~29
7	45	18 ~ 45	7.1 ~23.5	14~43
8	63	25~63	10~35	19~60

Main technical data (control and auxiliary circuit)

Serial number	Control circuit	Control power supply voltage Us: 230VAC/50Hz		Maximum power consumption of the solenoid: 4VA
1	Auxiliary switch circuit	2NO+2NC	AC-15，230V，5A	DC-13，110V0.55A，24V15A
2	Auxiliary signal circuit	2NO+1NC	230VAC	Ith: 5A
3	Alarm signal circuit	1NO	230VAC	Ith: 5A
4	Communication module circuit	/	24VDC	

YCKB7 Control and protection switchgear

Wiring diagram

CPS switch circuit diagram



Three-phase motor connection circuit diagram

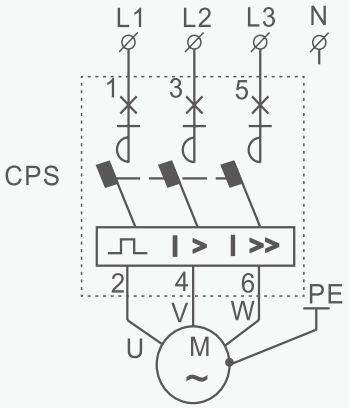

Local manual control circuit diagram 1 (2-wire control)

Control power supply	Local manual control	Auxiliary signal		Ready signal	Release signal	Alarm signal
		Operation	Stop			

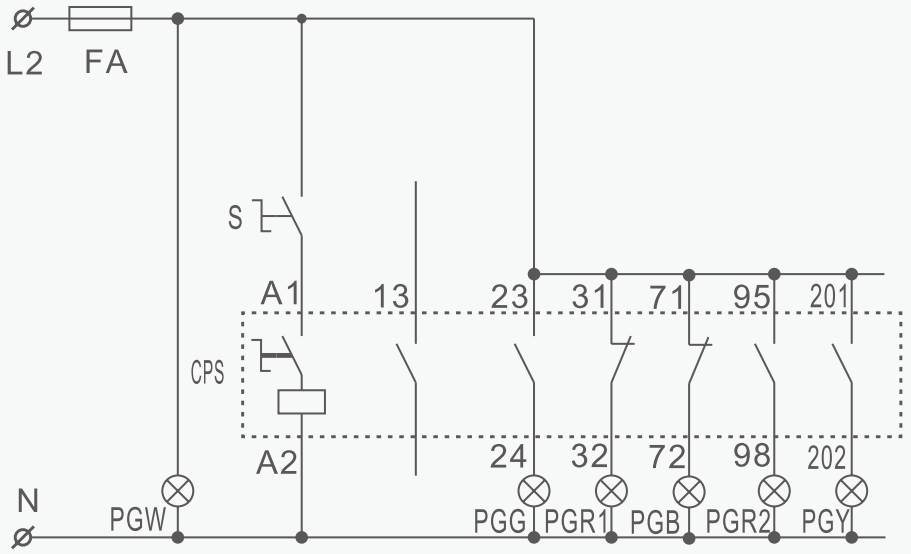

YCKB7 Control and protection switchgear

On-site manual control circuit diagram 2 (3-wire control)

Control power supply	Local manual control			Auxiliary signal		Ready signal	Release signal	Alarm signal
	Start	Stop	Self-locking	Operation	Stop			

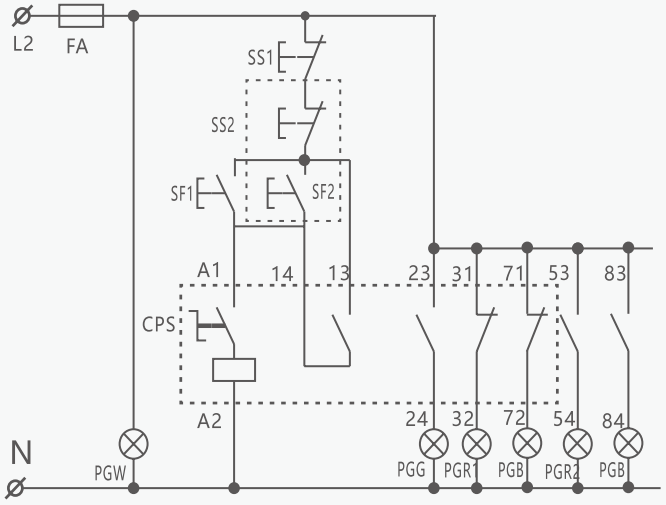

Local and remote manual control circuit diagram 3

Control power supply	Local and remote manual control	Auxiliary signal		Ready signal	Release signal	Alarm signal
		Operation	Stop			

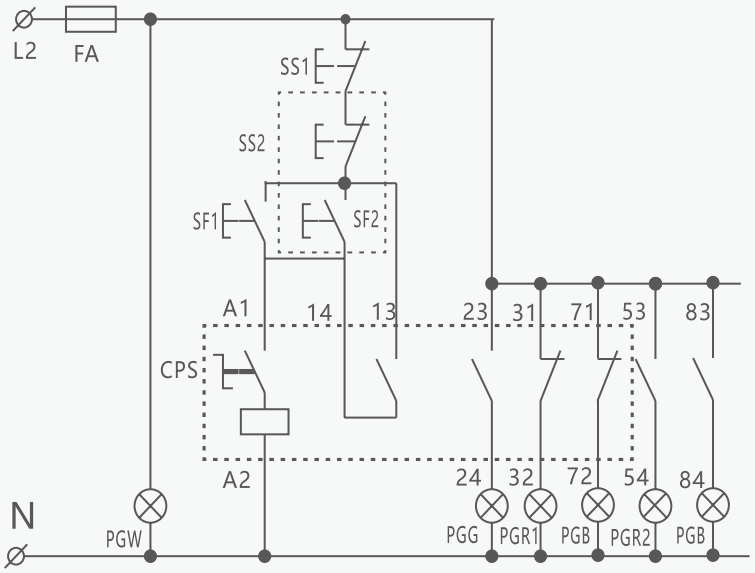

YCKB7 Control and protection switchgear

Local manual and remote control circuit diagram 4

Control power supply	Local manual control	Auxiliary signal		Ready signal	Release signal	Alarm signal	Remote control circuit connection
		Operation	Stop				

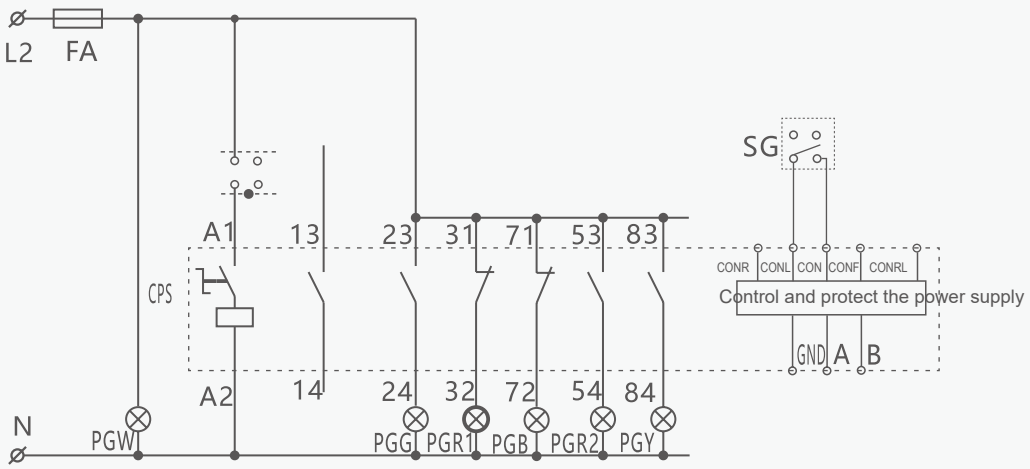

Note: SA can perform local manual control; when SA is activated, remote control can also be achieved through SG

Communication remote control circuit diagram 5 (with communication type controller)

Control power supply	Local manual control	Auxiliary signal		Ready signal	Release signal	Alarm signal	Remote control circuit connection
		Operation	Stop				

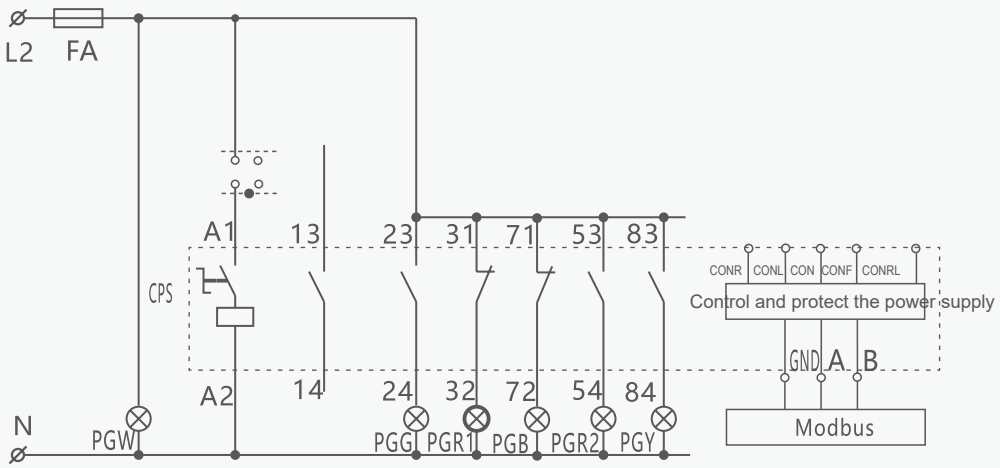

Note: SA can perform local manual control; when the controller is set to remote control mode, the upper-level computer can communicate and control when SA is activated

YCKB7 Control and protection switchgear

Overall and mounting dimensions (mm)

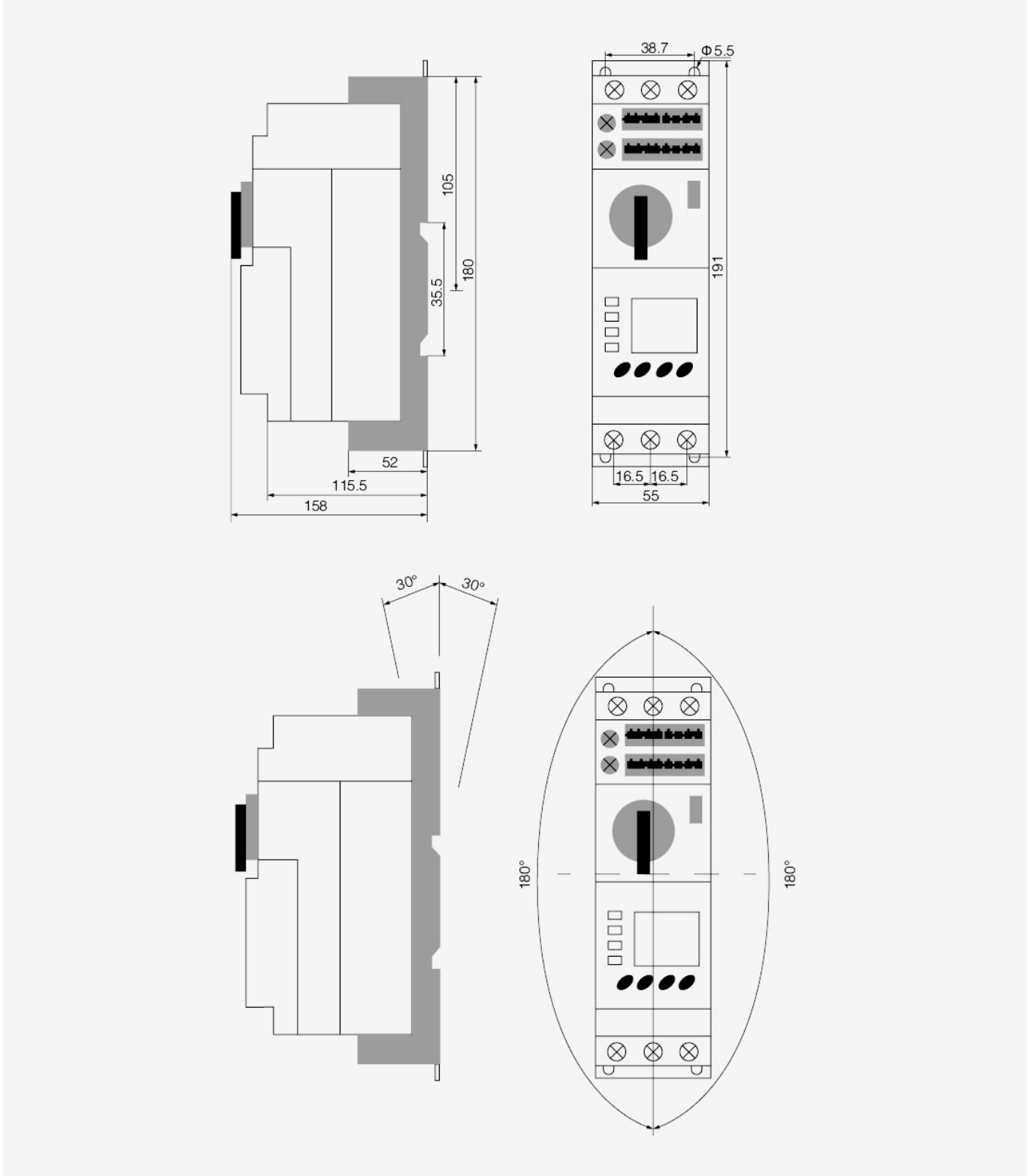

C