Distribution Apparatus

Moulded Case Circuit Breaker (YCM1)



Page B02

YCM1
MCCB



Page B15

YCM1LE
Earth Leakage MCCB

Moulded Case Circuit Breaker (YCM3)



Page B19

YCM3E
Electronic Adjustable MCCB



Page B19

YCM3LE
Earth Leakage MCCB



Page B19

YCM3T/A
Thermal Magnetic Adjustable MCCB



Page B19

YCM3RT
Thermal Magnetic Adjustable MCCB



Page B19

YCM3Y
LCD Electronic MCCB

Moulded Case Circuit Breaker (YCM6)



Page B42

YCM6i
MCCB

Moulded Case Circuit Breaker (YCM7)



Page B61

YCM7
MCCB



Page B69

YCM7RE
Electronic Adjustable MCCB



Page B75

YCM7T/A,RT
Thermal Magnetic Adjustable MCCB



Page B79

YCM7YV
Electronic MCCB



Page B83

YCM7LE
Earth Leakage MCCB



Page B90

YCM7
Series MCCB Accessories

Distribution Apparatus

Moulded Case Circuit Breaker (YCM8)



Page B94

YCM8 Series

MCCB



Page B99

YCM8

MCCB



Page B105

YCM8LE

Earth Leakage MCCB



Page B108

YCM8T/A,RT

Thermal Magnetic Adjustable MCCB



Page B111

YCM8E

Electronic Adjustable MCCB



Page B116

YCM8YV

LCD Electronic MCCB



Page B121

YCM8

Series MCCB Accessories



Page B131

YCM8N

Series MCCB



Page B143

YCM8C

External Circuit Breaker



Page B147

YCM8LZ

MCCB



Page B153

YCM8EC

Intelligent Four-remote Circuit Breaker

Air Circuit Breaker



Page B157

YCW1

(200~6300A)



Page B175

YCW1i

(200~6300A)



Page B208

YCW3

(200~6300A)



Page B227

YCW9X

(200~1600A)

Distribution Apparatus

Automatic Transfer Switch (ATS CB Class)



Page B254
YCQ1Bs
CB Class



Page B256
YCQ9B
CB Class



Page B259
YCQ7B
CB Class



Page B266
YCQ9Ms
CB Class



Page B273
YCQ2
CB Class

Automatic Transfer Switch (ATS PC Class)



Page B276
YCQ9
PC Class



Page B282
YCQ9E
PC Class



Page B288
YCQ6
PC Class



Page B292
YCQ6s
PC Class



Page B296
YCQR-63
PC Class



Page B298
YCQ4
PC Class



Page B308
YCQ3F
PC Class

Isolating Switch



Page B311
YCHGL
Single-throw Isolating Switch
(63~3200A)



Page B319
YCHGLZ1
Double-throw Isolating Switch
(125~3200A)

Low Voltage Fuse



Page B325
NT
Low Voltage Fuse

Distribution Apparatus

Fuse-switch Disconnector



Page B327

YCHR17

Fuse-switch Disconnector



Page B329

YCH5

Vertical Fuse-switch Disconnector

Switch Box



Page B333

ISBox Isolation switch box

Switch Box

YCM1 Series

Distribution Apparatus



- Reliable performance for more safety
- Reliable tripping of unipolar overload protection

CNC
ELECTRIC

YCM1 MCCB



General

YCM1 series moulded case circuit breaker(herein after called circuit breaker) adopts international advanced design and manufacturer's technology, it can be divided into L-type (standard type), M-type (higher type)according to the rated ultimate short circuit breaking capacity (Icu). With the features of small and compact, high breaking capacity, short arcing-over distance, anti-vibration, the circuit breaker is used popularly on land and marine products, which are applied for the power distribution network of AC 50/60Hz,rated insulation voltage 800V (YCM1-63 to 500V), rated working voltage 690V(YCM1-63 to 400V) and below, rated current up to 1600A. It can be used to distribute electric power and protect power equipment against overload, short circuit, undervoltage etc, It also takes protective effect when motors infrequently start and protects against overload, short circuit and lacking voltage. In the series, frame ranging from 63-630A three-pole product also comes with a transparent cover, it is convenient for customers to observe the product operation.
The circuit breaker can be installed vertically, or horizontally.
Standard : IEC60947-2.

Type designation

YCM1 - □ □ □ □ / □ □ □ □ □ □

Type		Frame Inm	Code of breaking capacity	Operation	Rated current(A)	
YCM1	-	□	□	□	□	/
MCCB		63, 125, 160, 250, 400, 630, 800, 1250, 1600	Code of breaking capacity: L-standard type; M-higher type;	Operation mode(note 2):	63: 10, 16, 20, 25, 32, 40, 50, 63 125: 10, 16, 20, 25, 32, 40, 50, 63, 80, 100, 125 160: 100, 125, 140, 160 250: 100, 125, 140, 160, 180, 200, 225, 250 400: 200, 225, 250, 275, 300, 315, 320, 350, 400 630: 400, 500, 630 800: 630, 700, 800 1250: 800, 1000, 1250 1600: 1600	

Poles	Tripping mode and inner accessory	Application	Option for 4P MCCB
□	□□□	□	□
2: 2P 3: 3P 4: 4P	Release method and accessories code(Table 1)	1. for power distribution; 2. for motor protection	N pole for 4P circuit breaker (note 3)

Note:

1. Blank for power distribution,2 for motor protection
2. Blank for direct operation with handle, Z for operation with rotary handle, P for motor-driven operation.
3. There are 2 types of N-pole for 4P breaker:
   A:Without current release components, N-Pole is always at making status(not breakers);
   B:Without current release components, N-Pole is made with the other three poles.

YCM1 MCCB

B

Curve

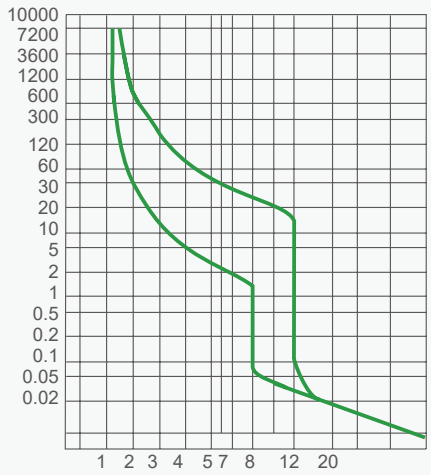

YCM1-63(10~32),YCM1-125(25~32)
Characteristic Curve

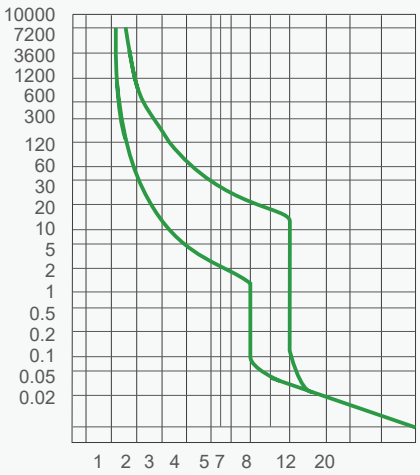

YCM1-63(40~63),YCM1-125(40~125)
Characteristic Curve

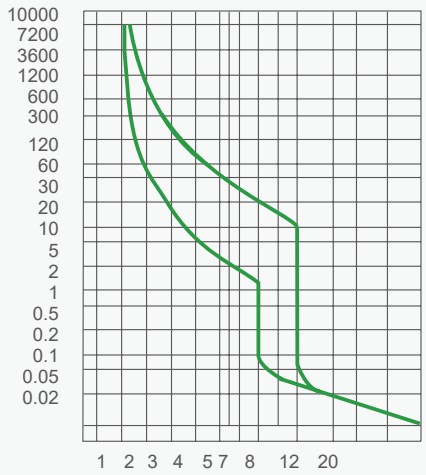

YCM1-160,YCM1-250
Characteristic Curve

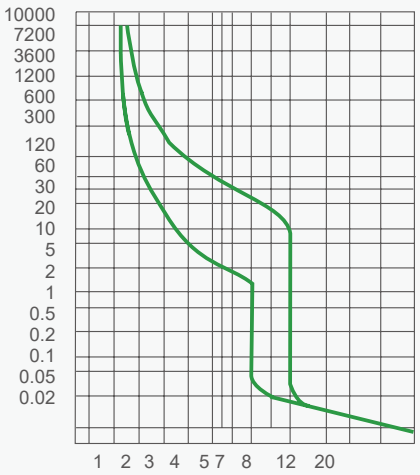

YCM1-400
Characteristic Curve

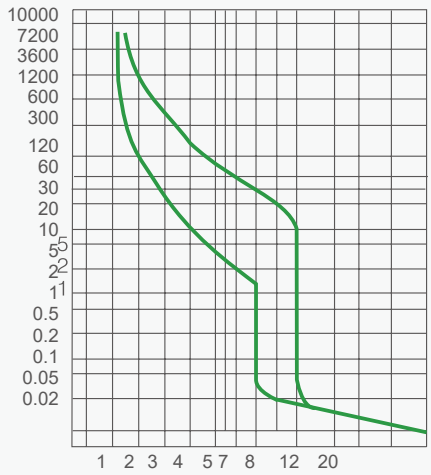

YCM1-630,YCM1-800
Characteristic Curve

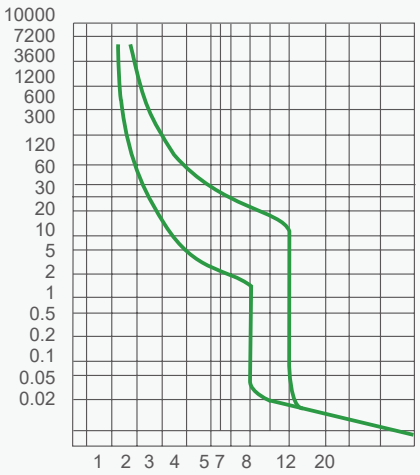

YCM1-1250,YCM1-1600
Characteristic Curve

YCM1 MCCB

Operating conditions

1. Temperature: -5°C~+40°C; the average value within 24h shall not exceed +35°C. For the circuit breaker with thermo-magnetic release, +40°C is set to be the standard temperature for ratings. For temperature not between -5°C~+40°C, please contact us for temperature compensation correction;
2. Altitude: not exceed 2000m (Please contact with us for reduction coefficient if altitude at the mounted site exceed 2000m)
3. Pollution grade: Grade 3;
4. Air conditions:
   At mounting site, relative humidity not exceed 50% at the max temperature of +40°C, higher relative humidity is allowable under lower temperature. For example, RH could be 90% at +20°C. Special measures should be taken when dew occurs.

Technical data

Type			YCM1-63		YCM1-125		YCM1-160	YCM1-250		YCM1-400		YCM1-630		YCM1-800		YCM1-1250		YCM1-1600	
Poles	P		3	3,4	2,3	3,4	3	2,3,4		3,4		3,4		3,4		3		3	
Rated current In	A		10, 16, 20, 25, 32, 40, 50, 63		10, 16, 20, 25, 32, 40, 50, 63, 80, 100, 125		100, 125, 140, 160	100, 125, 140 160, 180, 200 225, 250		200,225, 250,275, 300,315, 320,350, 400		400, 500, 630		630, 700, 800		800, 1000, 1250		1600	
Rated insulation voltage Ui	V		500		800														
Rated impulse withstand voltage Uimp	V		600		8000														
Rated operation voltage Ue	V		AC230/400/690																
Breaking capacity class			L	M	L	M	L	L	M	L	M	L	M	L	M	L	M	L	M
Limit short-circuit breaking capacity Icu	kA	230V	35	50	35	50	35	35	50	50	75	50	75	100	100	100	100	100	100
		400V	25	35	25/35	50	35	35	50	35/50	65	35/50	65	75	75	85	85	85	85
		690V	5	8	8	10	8	8	10	10	20	10	20	20	30	20	30	20	30
Working short-circuit breaking capacity Ics	kA	230V	18	50	22	50	22	22	50	50	50	50	50	75	75	75	75	75	75
		400V	18	22	18/22	25	22	18/22	25	18/35	32.5	18/35	42.5	50	50	50	50	50	50
		690V	2	4	4	5	4	4	5	5	10	5	10	10	15	10	15	10	15
Arcing distance	mm		50							100									
Operating life(cycle)	Electrical life		3000		3000		3000	3000		2000		2000		2000		800		500	
	mechanical life		20000		20000		20000	20000		10000		10000		10000		5000		2500	

B

Inner accessories

Table 1

Accessories name	Release method and accessories code		Accessories installation and down-leads			
	Electromagnetic release	Complex release	YCM1-63 YCM1-125	YCM1-160 YCM1-250	YCM1-400 YCM1-630	YCM1-800 YCM1-1250
Without parts	200	300				
Alarm contact(SD)	208	308				
Shunt release(MX)	210	310				
Auxiliary contact(OF)	220	320				
Undervoltage release(MN)	230	330				
Shunt release,Auxiliary contact(MN+OF)	240	340				
Shunt release, under-voltage release(MX+MN)	250	350				
Secondary auxiliary contact(2OF)	260	360				
Auxiliary contact,Undervoltage release(OF+MN)	270	370				
Shunt release,Alarm contact(MX+SD)	218	318				
Auxiliary contact, Alarm contact(OF+SD)	228	328				
Undervoltage release,Alarm contact(MN+SD)	238	338				
Shunt release,Auxiliary contact,Alarm contact(MX+OF+SD)	248	348				
Secondary auxiliary contact,Alarm contact(2OF+SD)	268	368				
Auxiliary contact, Undervoltage release, Alarm contact(OF+MN+SD)	278	378				

Note: left

right Alarm contact □ Shunt release ● Auxiliary contact ■ Undervoltage release ○

Note:

a. 200 represents the circuit breaker body with only electromagnetic release; 300 represents the thermal and electromagnetic release body.

b. 125, 250, 2-pole products only have 210, 220, 230, 310, 320, and 330.

YCM1 MCCB

Overview

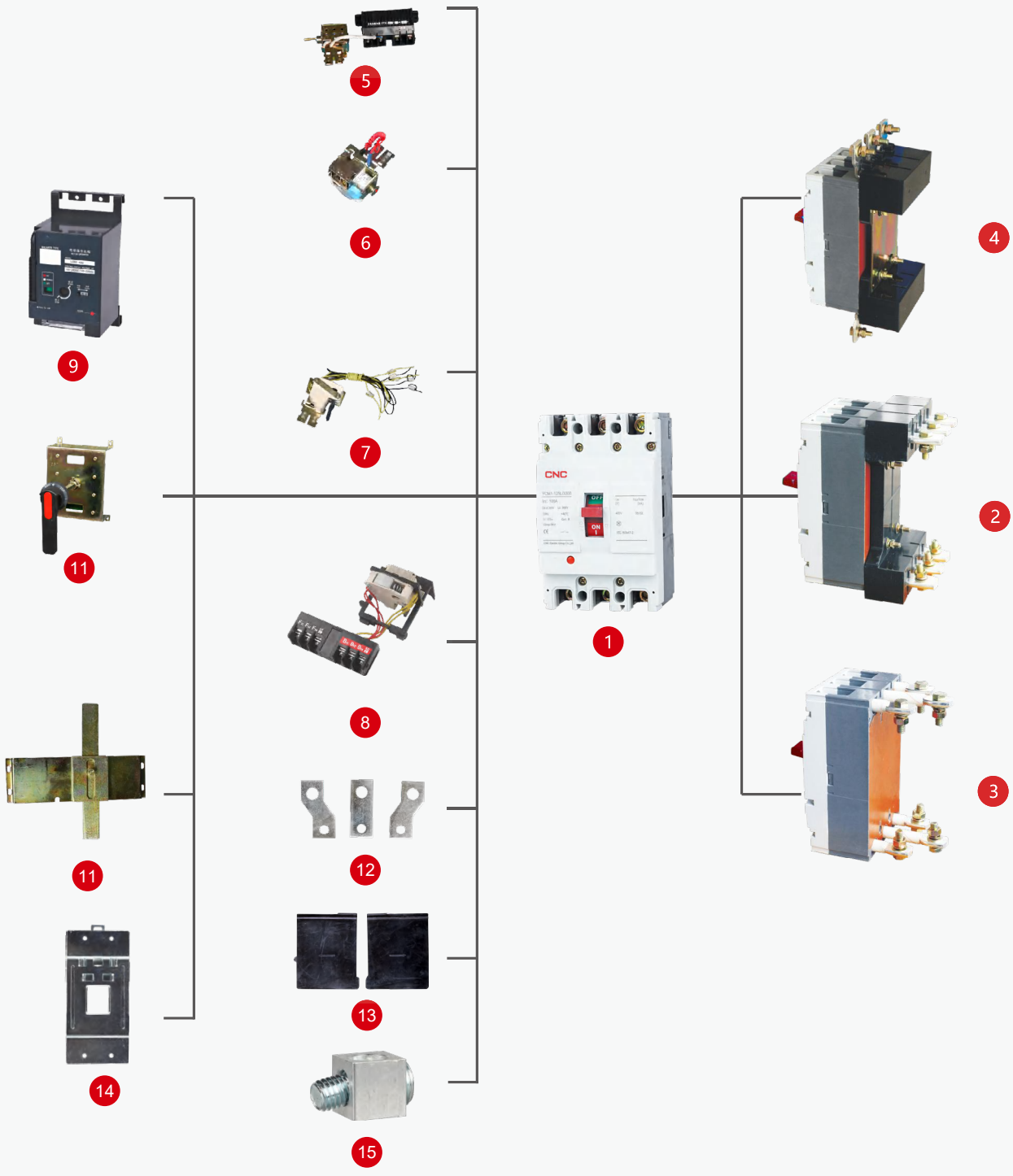

1. MCCB (fixed type)
2. Rear plug-in type
3. Rear connection type
4. Front plug-in type
5. Under-voltage release
6. Shunt release
7. Alarm contact
8. Auxiliary contact
9. Motor-drive operation mechanism
10. Extended manual operation handle
11. Mechanical interlock
12. Front connection plate
13. Interphase barrier
14. DIN Rail Aadapter(63/125/160/250)
15. Connecting terminal

YCM1 MCCB

Overall and mounting dimensions(mm)

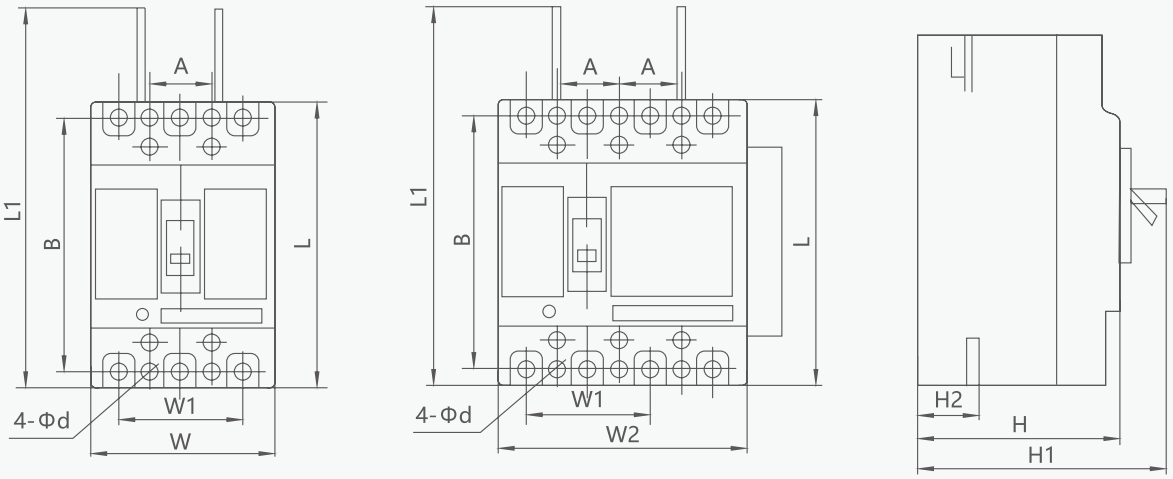

Type	Overall size (mm)								Installation size (mm)		
	W	L	H	W1	W2	L1	H1	H2	A	B	Φd
YCM1-63L	78	135	74	50	-	156	92	28	25	117	3.5
YCM1-63M	78	135	82	50	103	156	100	28	25	117	3.5
YCM1-125L	92	150	68	60	-	200	88	24	30	129	4.5
YCM1-125M	92	150	86	60	122	200	105	24	30	129	4.5
YCM1-160L	93	151	76	60	-	200	96	24	30	129	4.5
YCM1-250L	107	165	86	70	-	215	110	24	35	126	5
YCM1-250M	107	165	103	70	142	215	127	24	35	126	5
YCM1-400L	150	257	107	96	198	357	162	38	44	194	7
YCM1-400M	150	257	107	96	198	357	162	38	44	194	7
YCM1-630L	182	271	112	116	240	370	165	42	58	200	7
YCM1-630M	182	271	112	116	240	370	165	42	58	200	7
YCM1-800L/M	210	280	116	140	280	385	168	42	70	243	7
YCM1-1250L/M	210	406	158	140	-	610	193	60	70	375	11
YCM1-1600L/M											

B

Mechanical Accessories

Phase Spacers



- Phase spacers can enhance the insulation performance between phase conductors and can be installed from the front slot even after the switch is installed.
- Phase spacers are standard equipment, with 4 pieces for a 3P circuit breaker, with 6 pieces for a 4P circuit breaker.

Extension Terminals



Extension terminals are connected to the standard terminals of the circuit breaker to provide various wiring solutions in a small space:

- Straight extension terminals
- Pole pitch extension terminals

Busbars and extension terminals can be connected to the inlet or outlet end of the circuit breaker.

Electrical Accessories

Auxiliary Contact

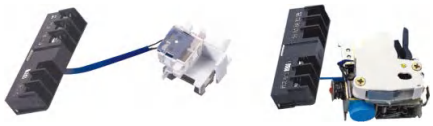

- An accessory connected to the auxiliary circuit of the switching device to indicate the ON or OFF (or Trip) state of the circuit breaker.

Alarm Contact

An accessory used to indicate whether the circuit breaker is in a non-tripped (ON or OFF) or tripped (Trip) state. When the alarm contact indicates that the circuit breaker is in the Trip state, there are the following five possibilities:

- Overload or short circuit fault
- Residual current fault
- Manual test button trip
- Shunt trip action
- Line fault, undervoltage release action

Electrical parameters of auxiliary alarm contact			
Conventional heating current (A)		3A	
Usage category		AC15	DC13
Working voltage 50/60Hz	AC400V	0.3A	-
	DC220V	-	0.15A

B

Electrical wiring diagram

Accessory Name	Closing	Opening/tripping
	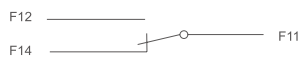	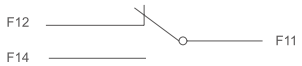

Accessory Name	Closing/opening	Tripping
	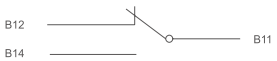	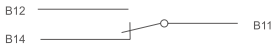



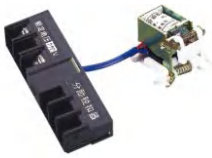

Shunt Trip

- The shunt trip should reliably trip the circuit breaker when the rated control power voltage U is between 70% and 110%.
- After the circuit breaker is tripped by the shunt trip, it needs to be reset on-site.

When the rated control voltage of the shunt trip is DC24V, the maximum length of the copper wire should meet the following requirements:

Rated Control Power Voltage Uc (DC24V) \ Wire Area	1 .5mm²	2.5mm²
100%Uc	150m	250m
85%Uc	100m	160m

If the above requirements are not met, it is recommended to design the shunt trip control circuit as follows:

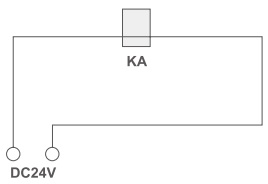

KA: DC24V intermediate relay, contact current capa

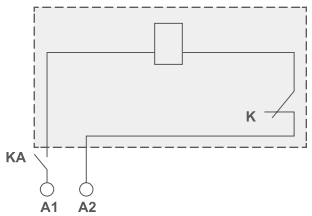

Power input



Undervoltage Release

- The undervoltage release should reliably trip the circuit breaker when the rated working voltage is between 35% and 70%.
- The undervoltage release should ensure that the circuit breaker can be closed when the rated working voltage is between 85% and 110%.
- The undervoltage release should prevent the circuit breaker from closing when the rated working voltage is lower than 35%.

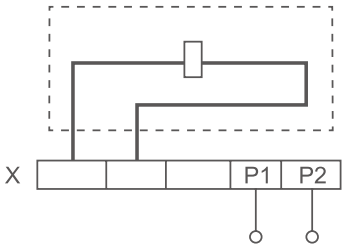

Electrical Wiring Diagram of Undervoltage Release

Electrical Wiring Diagram

Description: X - Wiring terminal block.

Note: The dashed frame indicates the wiring diagram of internal accessories of the circuit breaker.



External accessories

Motor-driven operation mechanism

Items \ Model	YCM1-63, YCM1-125, YCM1-250, YCM1-400, YCM1-630, YCM1-800, YCM1-1250, YCM1-1600
Structure form	Motor
Code of AC/DC voltage	AC 110V, AC 230V, AC 400V, DC 110V, DC 220V

YCM1 MCCB

Overall and mounting dimensions(mm)

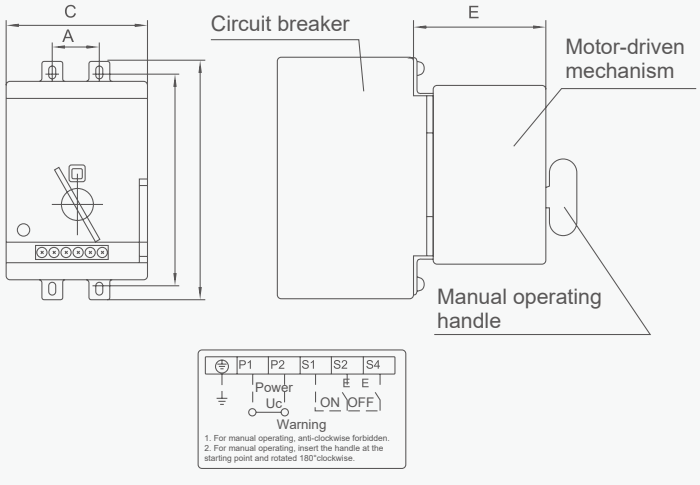

Wiring diagram

YCM1-63,125,250

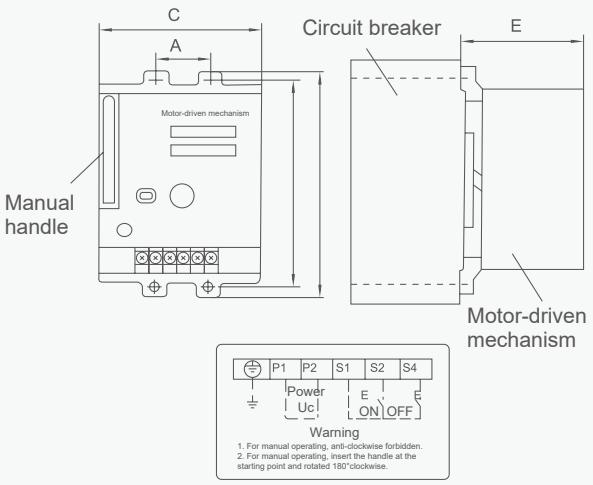

Wiring diagram

YCM1-400,630,800,1250,1600

Type	Overall size (mm)					Ue(V)	Ie(A)	Mechanical life (times)	Motorpower (W)
	A	B	C	D	E				
YCM1-63	25	117	74	102	79	K1	≤ 0.5	14000	14
YCM1-100	30	129	90	116	77	K1	≤ 0.5	14000	14
YCM1-250	35	126	90	116	77	K1	≤ 0.5	14000	14
YCM1-400	44	194	130	176	115	K2	≤ 2	5000	35
YCM1-630	58	200	130	176	115	K2	≤ 2	5000	35
YCM1-800	70	243	130	176	115	K2	≤ 2	5000	35
YCM1-1250	70	300	130	176	115	K2	≤ 2	5000	35
YCM1-1600	70	300	130	176	115	K2	≤ 2	2500	35

B

Rotary manual operation mechanism

Making/breaking wiring diagram of manual operation mechanism

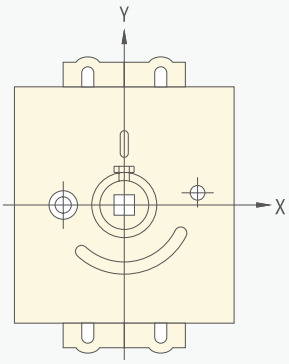

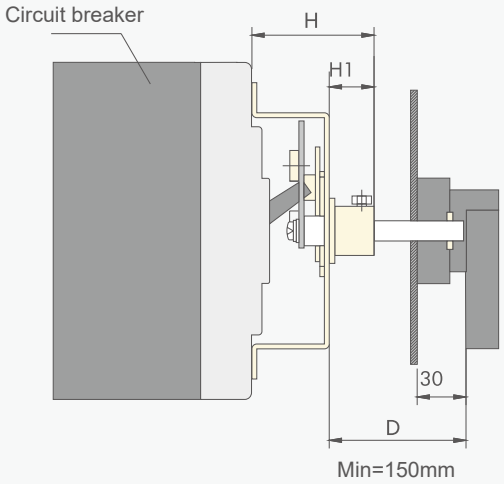

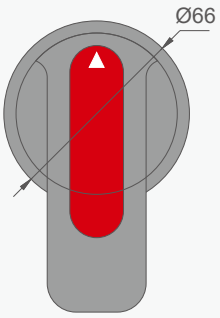

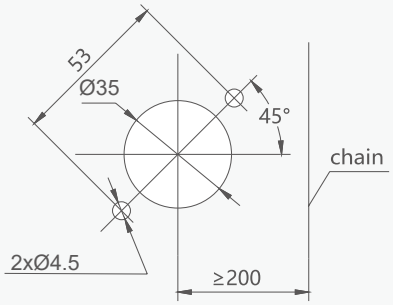

Boring diagram of handle mounting

(mm)

Frame size	YCM1-63	YCM1-125	YCM1-250	YCM1-400	YCM1-630	YCM1-800
Mounting size H	51	52	56	87	92	88
Mounting size H1	20	20	20	20	20	20

B

Mounting and boring dimensions

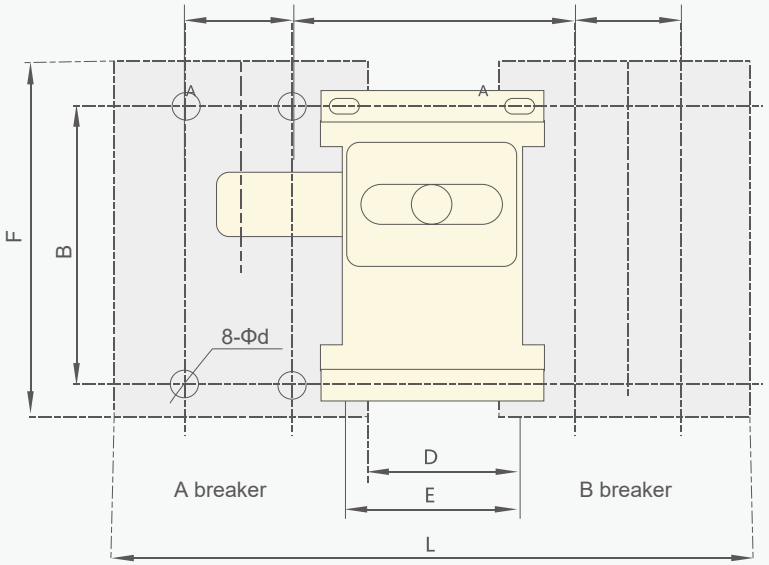

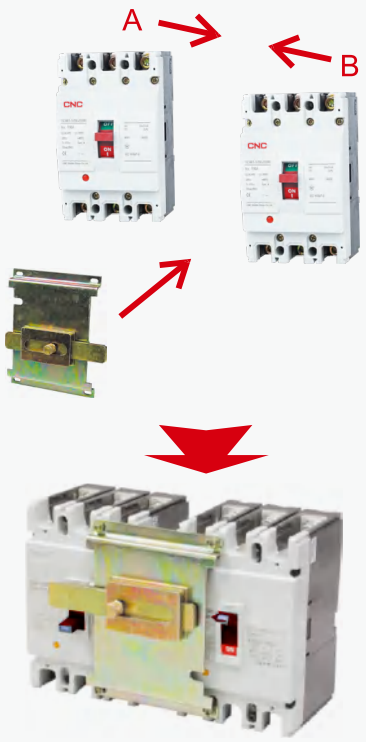

(mm)

Model	A	B	C	D	E	F	L	Φd
YCM1-63	25	117	80	30	80	135	182	4.5
YCM1-125	30	130.5	90	30	90	155	210	4.5×6*
YCM1-250	35	126	100	30	100	165	240	5.5
YCM1-400	44	194	136	30	40	257	330	7
YCM1-630	58	200	172	48	62	270	412	7
YCM1-800	70	243	167	28	40	280	448	7

Note:

1. * stands for length of boring.
2. Install the breaker on the frame first, then install the mechanical interlock on the breaker.



Aluminum terminal block

Built-in type

Frame	Number of holes	Wide	Wiring aperture	Maximum wiring
400A	1	30mm	Φ24	250 mm²
250A	1	23mm	Φ16	180mm²
160A	1	15.9mm	Φ10	78mm²
125A	1	14mm	Φ8	40mm²

External type



Frame	Maximum rated current	Number of holes	Wide	Wiring aperture	Maximum wiring
1600A	1600A	4	63mm	Φ13.5	400mm²
1250A	1250A	4	58mm	Φ13	254mm²
1250A	1000A	3	58mm	Φ13	254mm²
800A	800A	3	30mm	Φ20	300mm²
630A	630A	2	30mm	Φ20	300mm²
400A	400A	1	28mm	Φ20	300mm²
250A	250A	1	23mm	Φ16	180mm²
160A	160A	1	15.9mm	Φ14	70mm²
125A	125A	1	15.9mm	Φ11	60mm²
63A	63A	1	12.7mm	Φ8	40mm²

DIN Rail Adapter	Applicable frame	Rated thermal current Ith
	YCM1-63	3P
	YCM1-125	
	YCM1-160	
	YCM1-250	

YCM1LE Earth Leakage MCCB



General

YCM1LE series earth leakage circuit breaker (herein after called circuit breaker)is applied for the power distribution network of AC 50-60Hz,rated current 630A.The circuit breaker can protect people against indirect contact with dangerous electric current and prevent fire disaster caused by insulation fault and single-phase ground fault. It can be used to distribute electric power and protect power equipment against overload and short circuit. The circuit breaker can change the circuit and start motor infrequently. The rated residual operating current and the maximum off-time can be adjusted on-site according to actual situation, and the alarm&no tripping function can be customized.

Standard: IEC60947-2.

Type designation

YCM1LE - □ □ □ □ / □ □ □ □ □ □ □

Type	Frame size	Code of breaking capacity	Operation	Rated current(A)
YCM1LE -	□	□	□	□ /
MCCB	125, 250, 400,630,800	L-standard type M-higher type	Operation mode: blank:direct operation with handle Z:operation with rotary handle P:motor-driven operation	125: 10,16,20,25,32,40,50,63,80,100,125 250: 100,125,140 160,180, 200,225,250 400: 225,315,350,400 630: 400,500,630 800: 630,700,800

Poles	Application	Option for 4P MCCB	Alarm modular
□	□	□	□
Release method and accessories code(Table 1)	blank: for power distribution 2.for motor protection	Note is for 4P code	Alarm modular: I: alarm, tripping; II: alarm, no tripping

YCM1LE Earth Leakage MCCB

Technical data

Type		YCM1LE-125			YCM1LE-250			YCM1LE-400		YCM1LE-630		YCM1LE-800	
Frame current Inm(A)		125			250			400		630		800	
Rated current In(A)		10, 16, 20, 25, 32, 40, 50, 63, 80, 100, 125			100, 125, 140, 160, 180, 200, 225, 250			225, 315, 350, 400		400, 500, 630		630,700,800	
Pole		2	3	4	2	3	4	3	4	3	4	3	4
Rated insulation voltage Ui(V)		AC800											
Rated working voltage Ue(V)		AC230/400/690											
Rated impulse withstand voltage Uimp(V)		8000											
Arcing-over distance(mm)		50						100					
Breaking ability level		L	M		L	M		L	M	L	M	L	M
Rated ultimate short-circuit breaking capacity Icu(kA)		35	50		35	50		50	65	50	65	50	65
	230V	35	50		35	50		50	75	50	75	50	75
	400V	35	50		35	50		50	65	50	65	50	65
	690V	8	10		8	10		10	20	10	20	10	20
Rated working short-circuit breaking capacity Ics(kA)		22	25		22	25		35	42	35	42	35	42
	230V	22	50		22	50		50	50	50	50	50	50
	400V	22	25		22	25		35	42	35	42	35	42
	690V	4	5		4	5		5	10	5	10	5	10
Rated residual operating current IΔn(mA)	No time-delay type	30/100/500 100/300/500			30/100/500 100/300/500			100/300/500		300/500/1000		300/500/1000	
	Time-delay type	100/300/500			100/300/500			100/300/500		300/500/1000		300/500/1000	
Rated residual non-operating current IΔn(mA)		1/2 IΔn			1/2 IΔn			1/2 IΔn		1/2 IΔn		1/2 IΔn	
Operating life(cycle)	Power on	1500			1000			1000		1000		1000	
	Power off	8500			7000			4000		4000		4000	
	Total times	10000			8000			5000		5000		5000	
Residual current protection operating time		IΔn			2IΔn			5IΔn		10IΔn		10IΔn	
Max. breaking time(s)	No time-delay type	0.2			0.1			0.04		0.04		0.04	
	Time-delay type	0.4/1			0.4/1			0.3/1		0.3/1		0.3/1	

YCM1LE Earth Leakage MCCB

Inner accessories

Table 1

Accessories name	Release method and accessories code		Accessories installation and down-leads			
	Electromagnetic release	Complex release	YCM1LE-125/3 YCM1LE-250/3	YCM1LE-125/4 YCM1LE-250/4	YCM1LE-400/3 YCM1LE-630/3 YCM1LE-800/3	YCM1LE-400/4 YCM1LE-630/4 YCM1LE-800/4
Without parts	200	300				
Alarm contact(SD)	208	308				
Shunt release(MX)	210	310				
Auxiliary contact(OF)	220	320				
Undervoltage release(MN)	230	330				
Shunt release,Auxiliary contact(MN+OF)	240	340	—		—	
Secondary auxiliary contact(2OF)	260	360				
Auxiliary contact,Undervoltage release(OF+MN)	270	370	—		—	
Shunt release,Alarm contact(MX+SD)	218	318	—		—	
Auxiliary contact, Alarm contact(OF+SD)	228	328				
Undervoltage release,Alarm contact(MN+SD)	238	338	—		—	
Shunt release,Auxiliary contact,Alarm contact(MX+OF+SD)	248	348	—		—	
Secondary auxiliary contact,Alarm contact(2OF+SD)	268	368	—		—	
Auxiliary contact, Undervoltage release, Alarm contact(OF+MN+SD)	278	378	—		—	

Note: left right Alarm contact □ Shunt release ● Auxiliary contact ■ Undervoltage release ○

Note:

a. 200 represents the circuit breaker body with only electromagnetic release; 300 represents the thermal and electromagnetic release body.

b. 125, 250, 2-pole products only have 210, 220, 230, 310, 320, and 330.

YCM1LE Earth Leakage MCCB

Overall and mounting dimensions(mm)

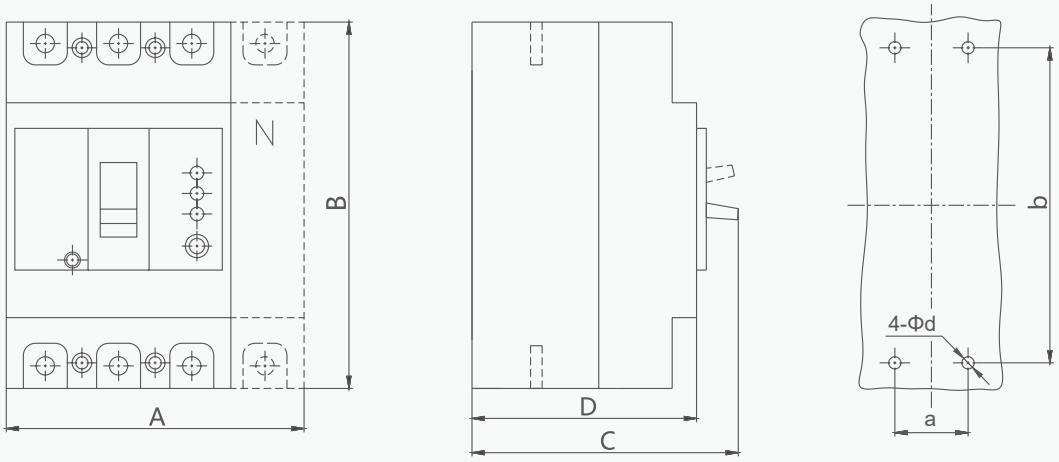

Type	Pole	Overall size (mm)				Installation size (mm)		
		A	B	C	D	a	b	Φd
YCM1LE-125	2	62	150	95	72	/	124	4.5
	3	92	150	110	92	30	129	4.5
	4	122				60		
YCM1LE-250	3	107	165	110	90	35	126	4.5
	4	142				70		
YCM1LE-400	3	150	257	146.5	106.5	44	194	7
	4	198				94		
YCM1LE-630/800	3	210	280	155	115.5	70	243	7
	4	280				140		

YCM3 Series MCCB



YCM3T/A



YCM3RT



YCM3E

General

YCM3 Series moulded case circuit breaker, is new products, with small compact, modular, high break, double breakpoints, zero arcing, green environmental protection. Suitable for AC 50Hz, 60Hz, rated operating voltage 690V and below, rated current 12.5A to 1600A distribution network, used to distribute electrical energy and protection lines and power supply equipment from overload, short circuit and undervoltage failure hazards. It can also be used as a non-frequent conversion of the line under normal conditions and in the infrequent start of the motor.

YCM3 circuit breaker equips with intelligent controller as well, which not only makes its current adjustable but also grants protection against overload(long delay), short-circuit(short delay), short-circuit(instantaneous) & undervoltage. It'll certainly improve the entire power system's reliability, continuity & security. RS485 interface,MODBUS-RTU protocol.With MODBUS module equipped,customers can choose options as below. Remote signal: Switching ON/OFF, tripping, alarm & malfunctioning signal indication.

Remote control: Switching ON/OFF,reset.Remote test: 3-phase current & N-pole current, grounding current. Remote adjustment: accept and execute remote command to debug remote control .Tripping unit memory recording function, last three time' tripping records can be well traced. YCM3 circuit breaker also obtains isolation function(Can be used as an alternative load switch).

Standard: IEC 60947-2.

Operating conditions

1. The altitude of the installation site does not exceed 2000m;
2. The YCM3 thermomagnetic type with temperature of the surrounding medium is -5°C~+40°C, and the average temperature of 24 h is not more than +35°C. The relative humidity of the air at the installation site does not exceed 50% at a maximum temperature of +40°C; at lower temperatures, there may be a higher relative humidity; the average minimum temperature of the wettest month does not exceed +25°C for the average of the month The maximum relative humidity is not more than 90%, and the condensation on the surface of the product due to temperature changes is considered.
3. YCM3 intelligent type with temperature of the surrounding medium is 40°C~+80°C.
4. The product is used in non-explosive hazardous media, and the media does not have enough to corrode metals and destroy insulating gases and conductive dust.
5. In places where there is rain protection and no water vapor.
6. The installation category is Class III.
7. The pollution level is level 3.
8. The basic installation of the circuit breaker is vertical (ie vertical) or horizontal (ie horizontal).
9. The incoming line is either the up line or the down line.
10. Circuit breakers can be divided into fixed and plug-in types.

YCM3 Series MCCB



YCM3Y



YCM3Y
With communication



YCM3LE
With residual current module

Type designation

YC M 3 E 160 N 3P 160A 3.0E

Product name	Frame current	Number of poles	Tripping mode and inner accessory	Rated current
YC	M	3	E	160
/	/		MA:Single magnetic T/A : overload adjustable RT: Overload+short circuit adjustable E :Electronic(2.0E,3.0E) Y: LCD intelligent electronic YV: Voltage measurement type YP:Power measurement LE: Earth leakage type	100, 160, 250, 400, 630, 1600

Breaking capacity code	Number of poles	Rated current		Intelligent controller
N	3P	160A		3.0E
N:Standard; H:High Breaking type	3P, 4P	TA: 100: 20, 25, 32, 40, 50, 63, 80, 100 160: 20, 25, 32, 40, 50, 63, 80, 100, 125, 160 250: 80, 125, 100, 160, 180, 200, 225, 250	RT: 250: 200, 225, 250 400: 250, 315, 350, 400 630: 400, 500, 600	2.0E,3.0E
		E\Y\YV\YP: 40A,100,160,250,400,630,800,1000,1250,1600		

Release

The type of stripper is divided into: thermal magnetic stripper and Intelligent stripper

1. Thermal magnetic stripper is divided into types according to protection type Distribution Protection Code: TM; Motor (single-magnetic) protection Code: MA.
2. Intelligent stripper According to the function is divided into three kinds: ordinary type, liquid crystal type and with voltage detection type.

YCM3 Series MCCB



YCM3T/A

T/A Overload adjustable

The thermal-magnetic trip units of the YCM3T/A-100, 160, and 250 molded case circuit breakers (MCCBs) are adjustable to meet specific protection requirements.

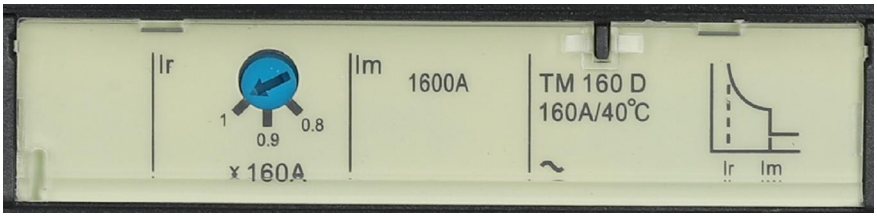

T/AOverload adjustable	100	160	250
Number of poles	3P /4P		
Rated current In (A)	20, 25, 32, 40, 50, 63, 80, 100	20, 25, 32, 40, 50, 63, 80, 100, 125, 160	80, 125, 100, 160, 200, 225, 250, 180, 200, 225, 250
Overload long delay setting current(IR)	0.8-1.0		
Shortcircuit transient tuning current (Ii)	10In		



YCM3RT

RT:Overload+short circuit adjustable

The YCM3RT-250, 400, and 630 MCCBs are also equipped with adjustable thermal-magnetic trip units to ensure proper protection coordination.

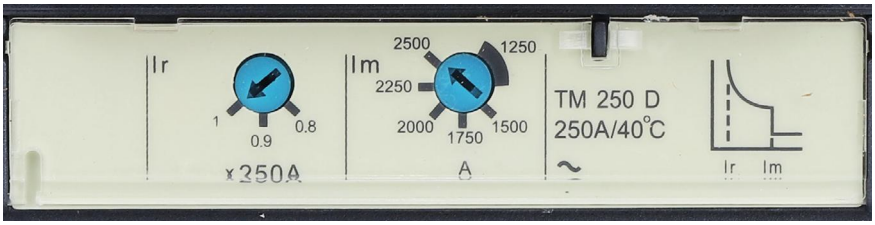

T/AOverload adjustable	250	400	630
Number of poles	3P /4P		
Rated current In (A)	200, 225, 250	250, 315, 350, 400	400, 500, 600
Overload long delay setting current(IR)	0.8-1.0	0.7-1.0	
Shortcircuit transient tuning current (Ii)	(0.5-1.0)In		

YCM3 Series MCCB



YCM3E

Electronic2.0E/3.0E

Electronic trip units provide three-stage protection: overload, short-time delay, and instantaneous short-circuit.
Standard 2.0E controller (3 dials): Ir (A), Isd (×Ir), Ii (×Ir).
Optional 3.0E controller (5 or 6 dials): Ir (A), Isd (×Ir), Ii (×Ir), tR (s), tsd (s), Ig (×Ir).

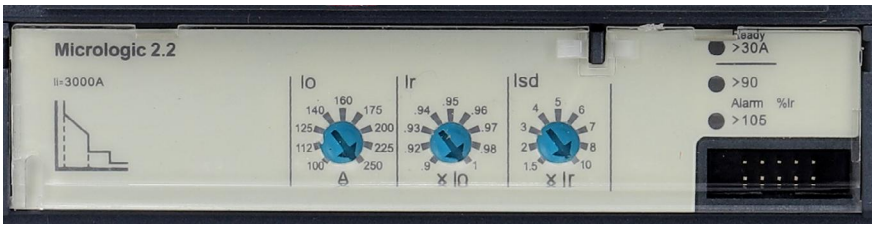

Type of Stripper	Type	Overload long delay setting current(Ir)	Overload long delay (6·IN) Fix buckle time(Tr)	Short-circuit shorter delay tuning current (Isd)	Short-circuit shorter delay setting time (Tsd)	Short-circuit transient tuning current (Ii)	Grounding Protection setting current (Ig)
E(2.0E): Electronic 2.0E	YCM3E-40 2.0E YCM3E-100 2.0E YCM3E-160 2.0E YCM3E-250 2.0E YCM3E-400 2.0E YCM3E-630 2.0E	(0.4~1)In 40A:(0.45~1)In	/	(1.5~10)Ir	/	(2~12)In	/
	YCM3E-800 2.0E YCM3E-1000 2.0E YCM3E-1250 2.0E YCM3E-1600 2.0E	(0.4~1)In	0.5~24s	(1.5~10)Ir		(2~12)In	
E(3.0E): Electronic 3.0E	YCM3E-40 3.0E YCM3E-100 3.0E YCM3E-160 3.0E YCM3E-250 3.0E YCM3E-400 3.0E YCM3E-630 3.0E	(0.4~1)In 40A:(0.45~1)In	0.5~12s	(1.5~12)Ir	0.05s~0.4s	(2~15)In	(20%~100%)In
	YCM3E-800 3.0E YCM3E-1000 3.0E YCM3E-1250 3.0E YCM3E-1600 3.0E	(0.4~1)In	0.5~24s	(1.5~10)Ir	0.05s~0.4s	(2~15)In	Optional
Adjustment step		1/9 Range	0.5,1,2,4,6,8, 10,12...	1.5,2,3,4,5,6, 7,8,10,12	0.05,0.1,0.2,0 .3,0.4	OFF, 2, 3, 4, 5, 6, 7, 8, 10, 12,15	0.2,0.3,0.4,0.5, 0.6,0.7,0.8,0.9, 1.0

YCM3 Series MCCB



YCM3Y

YCM3Y Electronic (intelligent) release with LCD display, without data transmission, with adjustments:

(Ir (A), Isd (xIr), Ii (xIr), Tr (S), Tsd (S), Ig (xIr)). Without measuring functions

YCM3YV Electronic (intelligent) release with LCD display, data transmission via Modbus, with adjustments: (Ir (A), Isd (xIr), Ii (xIr), Tr (S), Tsd (S), Ig(xIr)). Measuring functions:

U_{ab}, U_{bc}, U_{ca}, U_{an}, U_{bn}, U_{cn}, I_A, I_B, I_C, I_N, I_g.

YCM3YP Electronic (intelligent) release with LCD display, data transmission via Modbus, with adjustments: (Ir (A), Isd (xIr), Ii (xIr), Tr (S), Tsd (S), Ig(xIr)). Measuring functions:

U_{ab}, U_{bc}, U_{ca}, U_{an}, U_{bn}, U_{cn}, I_A, I_B, I_C, I_N, I_g.

P_A, P_B, P_C, P_E, Q_A, Q_B, Q_C, Q_E, S_A, S_B, S_C, S_E.



Type of Stripper	Type	Overload long delay setting current(Ir)	Overload long delay (6·IN) Fix buckle time(Tr)	Short-circuit shorter delay tuning current (Isd)	Short-circuit shorter delay setting time (Tsd)	Short-circuit transient tuning current (Ii)	Grounding Protection setting current (Ig)	Grounding Protection setting time (Tg)
Y:LCD display,Current typeYV:LCD display, Voltage typeYP:LCD display,Power type	YCM3Y(YV,YP)-40 YCM3Y(YV,YP)-100 YCM3Y(YV,YP)-160 YCM3Y(YV,YP)-250 YCM3Y(YV,YP)-400 YCM3Y(YV,YP)-630	(0.4~1)In	0.5~12s	(1.5~12)Ir	0s~0.4s	(2~15)In	(20%~100%) In	0s~0.4s
	YCM3Y(YV,YP)-800 YCM3Y(YV,YP)-1000 YCM3Y(YV,YP)-1250 YCM3Y(YV,YP)-1600	(0.4~1)In	0.5~24s	(1.5~12)Ir	0s~0.4s	(2~15)In	(20%~100%) In	0s~0.4s
Adjustment step		1A	1s	1.5, 2, 3, 4, 5, 6, 7, 8, 10, 12	0.1s	OFF, 2, 3, 4, 5, 6, 7, 8, 10, 12, 15	1%	0.1s

YCM3 parameter measurement function is shown in table 2

Table 2

function type	functional category	Specific functions	Monomagnetic	Thermomagnetic		Electronic				
			MA	T/A	RT	2.0E	3.0E	Y	YV	YP
Protection function	Current (A)	overload protection	/	■	■	■	■	■	■	■
		Short circuit short time delay protection	/	/	/	■	■	■	■	■
		Instantaneous protection	■	■	■	■	■	■	■	■
		Overload warning	/	/	/	■	■	■	■	■
		Neutral line protection	□	□	□	□	□	□	□	□
		Grounding protection	/	/	/	/	/	■	■	■
		Current imbalance protection	/	/	/	/	/	/	■	■
	Voltage (V)	Zero break protection	/	/	/	/	/	/	■	■
		Voltage imbalance protection	/	/	/	/	/	/	■	■
		Overfrequency and underfrequency protection	/	/	/	/	/	/	■	■
		Phase sequence protection	/	/	/	/	/	/	■	■
Measurement function	Current (A)	Phase current	/	/	/	/	/	■	■	■
		Neutral current	/	/	/	/	/	□	□	□
		Percentage of ground faults	/	/	/	/	/	/	■	■
		Current imbalance rate of each phase	/	/	/	/	/	/	■	■
	Voltage (V)	Line voltage	/	/	/	/	/	/	■	■
		Phase voltage	/	/	/	/	/	/	■	■
		Average line voltage	/	/	/	/	/	/	■	■
		Average phase voltage	/	/	/	/	/	/	■	■
		Voltage imbalance rate	/	/	/	/	/	/	■	■
		phase sequence	/	/	/	/	/	/	■	■
		frequency	/	/	/	/	/	/	■	■
	Power	Meritorious	/	/	/	/	/	/	/	■
		Reactive power	/	/	/	/	/	/	/	■
		Apparent	/	/	/	/	/	/	/	■
		Power factor and	/	/	/	/	/	/	/	■
	Quantity of electricity	Active, reactive, apparent	/	/	/	/	/	/	/	■
Maintenance function	Accumulated function	Various types of protection tripping times, displacement times, etc	/	/	/	/	/	/	■	■
	Event recording	Trip records, alarm records, displacement records, etc	/	/	/	/	/	/	■	■
	Contact wear	Contact wear record	/	/	/	/	/	/	■	■
	Number of operations	Record of operation times	/	/	/	/	/	/	■	■
	RTC function	Real time clock	/	/	/	/	/	/	■	■
	Auxiliary/alarm detection function	Auxiliary, alarm detection, and display of circuit breaker status	/	/	/	/	/	/	□	□
	Electric operation control function	Remote electric operation control function	/	/	/	/	/	/	■	■
	human-computer interaction	LED indication	/	/	/	/	/	■	■	■
		LCD display	/	/	/	/	/	■	■	■
		Key settings	/	/	/	/	/	■	■	■
	communication function	Moedbus RTU DL/T645	/	/	/	/	/	□	■	■

YCM3 Series MCCB

Technical data

1.The basic parameters of the circuit breaker are shown in Table 2.

2.The overload delay and short-circuit transient protection action characteristics of the circuit breaker are shown in Table 4 and Table 3.

Table 3

Type		YCM3-100		YCM3-160		YCM3-250		YCM3-400		YCM3-630		YCM3-1600
Number of poles		3P, 4P		3P, 4P		3P, 4P		3P, 4P		3P, 4P		3P, 4P
Shell frame maximum rated current Inm(A)		100		160		250		400		630		1600
Rated current In(A)	Thermomagnetic (T/A)	20, 25, 32, 40, 50, 63, 80, 100		20, 25, 32, 40, 50, 63, 80, 100, 125, 160		80, 125, 100, 160, 180, 200, 225, 250		/		/		/
	Thermomagnetic (RT)	/		/		200, 225, 250		250, 315, 350, 400		400, 500, 600		/
	Electronic (2.0E,3.0E,Y,YV,YP)	40,100		160		250		400		630		800, 1000, 1250, 1600
Rated insulation voltage Ui(V)		800		800		800		1000		1000		1000
Rated impulse withstand voltage Uimp(kV)		8		8		8		8		8		8
Rated voltage Ue(V)50-60Hz		AC415/500/690		AC415/500/690		AC415/500/690		AC415/500/690		AC415/500/690		AC415/500/690
		YCM3YVYP :AC415										
Flying arc Distance(mm)		0		0		0		0		0		0
Short circuit breaking capability level		N	H	N	H	N	H	N	H	N	H	N
Rated limit Short circuit Breaking capacity Icu(kA)	AC220V	75	100	75	100	75	100	75	100	75	100	75
	AC415V	50	80	50	85	50	85	50	85	50	85	50
	AC500V	35	50	50	60	50	60	30	50	35	50	35
	AC690V	6	6	6	6	6	6	10	15	10	100	20
Rated running short circuit Breaking capacity Ics(kA)	AC220V	75% Icu										
	AC415V											
	AC500V											
	AC690V											
Rated short time resistant current Icw(kA) (1s)		/	3	/	3	/	3	/	5	/	8	8
Working with categories		A		A		A		A	B	A	B	B
Remaining Current protection		Additional Residual current protection module (See P32-34 LE remaining current module for specific parameters)						Additional Residual current protection module (See P32-34 LE remaining current module for specific parameters)				
Electrical Life Test	AC415V	10000	10000	8000	8000	8000	8000	600	600	5000	5000	1500
	AC690V	1500	1500	1500	1500	1500	1500	1000	1000	1000	1000	1000 1000
Number of mechanical life		20000	20000	20000	20000	20000	20000	10000	10000	10000	10000	10000 10000
Dimensions	Wide(3P/4P)	105/140		105/140		105/140		140/185		140/185		210/280
	Long	161		161		161		255		255		327
	High	86		86		86		110		110		147
Mode of operation		Manual Direct operation, Rotate handle operation,Electric operating mechanism						Manual Direct operation, Rotate handle operation,Electric operating mechanism				
Mounting method		Fixed type(front of plate), Fixed type(rear of plate), Plug-in(front of plate), Plug-in(rear of plate)						Fixed type(front of plate), Fixed type(rear of plate), Plug-in(front of plate), Plug-in(rear of plate)				

Technical data

Table 4

Serial number	Distribution breaker				Circumstance temperature
	Test current(times)		Tripping time	Status	
1	1.05In		1h non-tripping (In≤63A) 2h non-tripping (In>63A)	Initial	-40°C±2°C
2	1.3In		1h tripping (In≤63A) 2h tripping (In>63A)	Following serial 1	
3	10In±20%	8In	> 0.2s Tripping	Initial	Any suitable temperature
4		12In	≤ 0.2s Tripping		

Table 5

Serial number	Distribution breaker				Circumstance temperature
	Test current(times)		Tripping time	Status	
1	1.05In		2h non-tripping	Initial	-40°C±2°C
2	1.2In		2h tripping	Following serial 1	
3	1.5In		4min tripping	The order 1 current reaches the thermal equilibrium and begins	
4	7.2In		2~10s Tripping	Initial	
5	12In±20%	8In	> 0.2s Tripping	Initial	Any suitable temperature
6		12In	≤ 0.2s Tripping		

B

YCM3-100,160,250 Overall and mounting dimensions(mm)

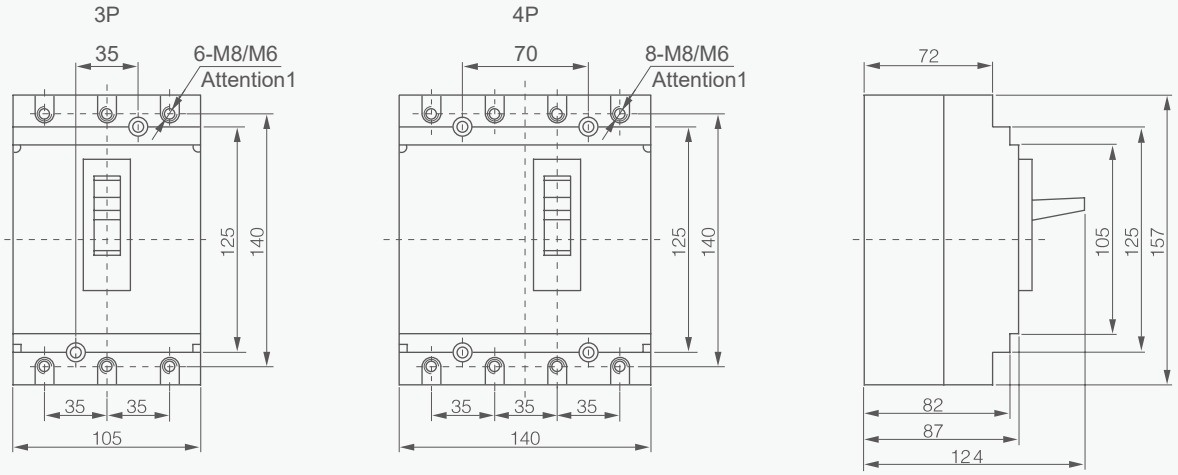

Attention1: when in>100A,Fixing screw size should be M8 ,When In ≤100A, fixing screw size should be M6.

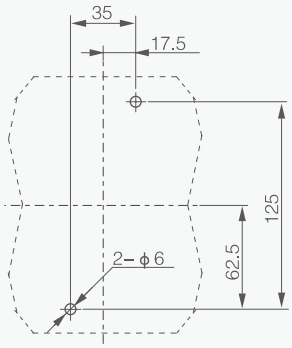

3P : Installed on the panel

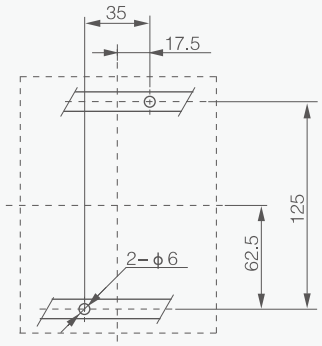

3P : Installed on leading rails

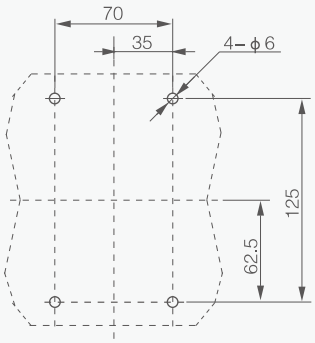

4P : Installed on the panel

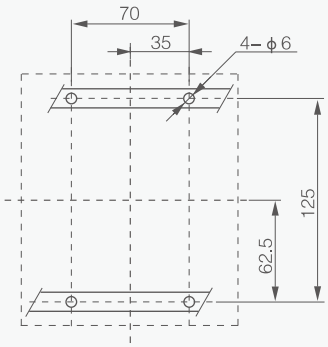

4P : Installed on leading rails

B

YCM3-400,630 Overall and mounting dimensions(mm)

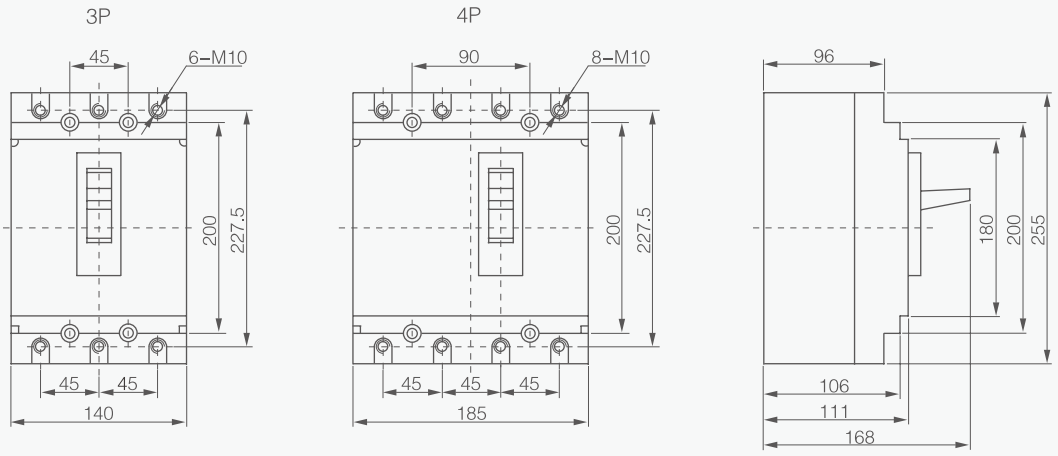

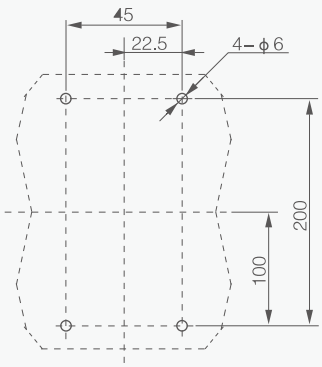

3P : Installed on the panel

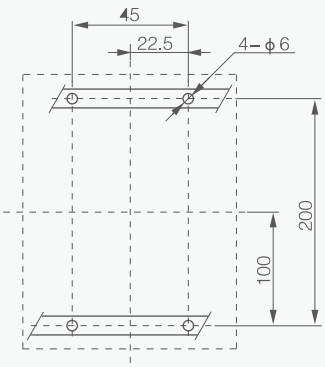

3P : Installed on leading rails

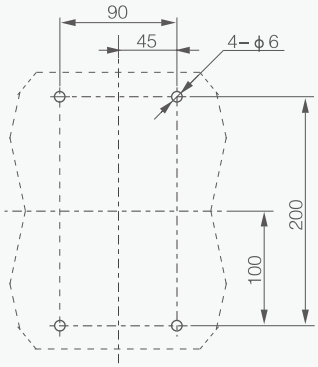

4P : Installed on the pane

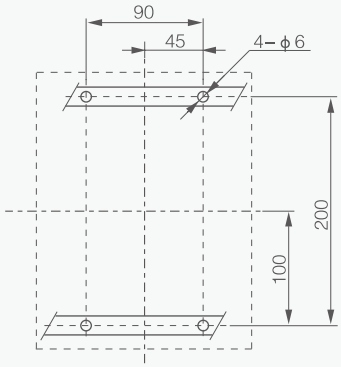

4P : Installed on leading rails

B

YCM3-1600 Overall and mounting dimensions(mm)

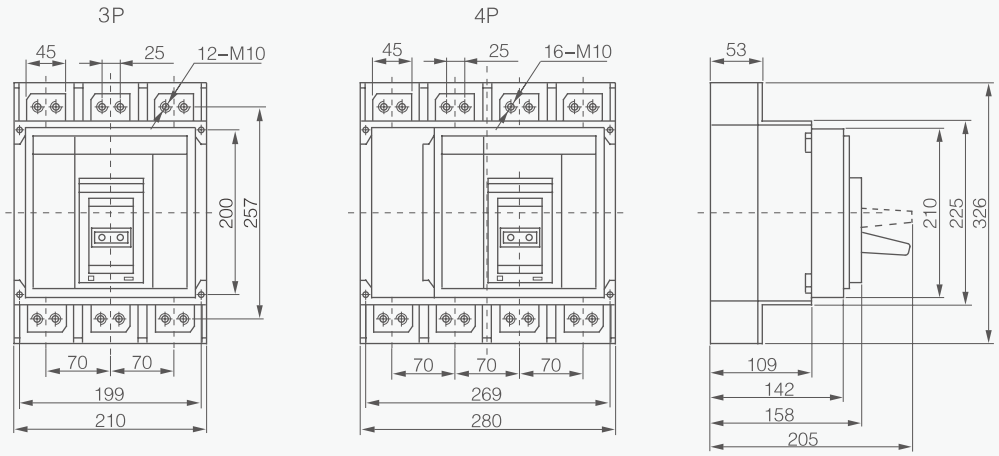

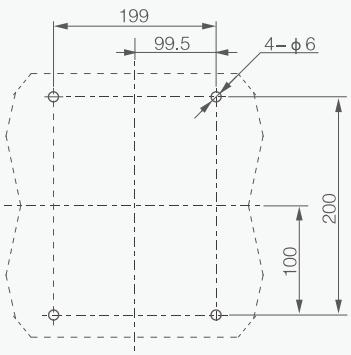

3P : Installed on the panel

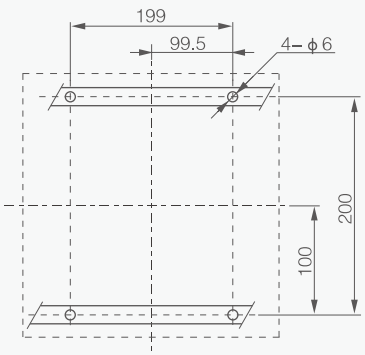

3P : Installed on leading rails

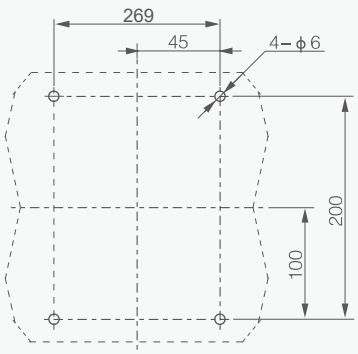

4P : Installed on the panel

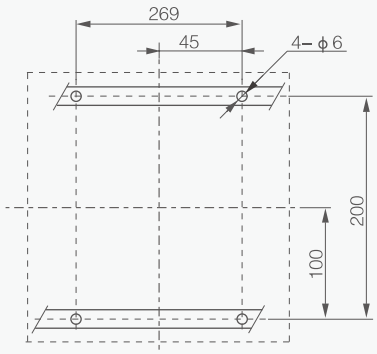

4P : Installed on leading rails

B

YCM3-100,160,250 (with residual current module) Overall and mounting dimensions(mm)

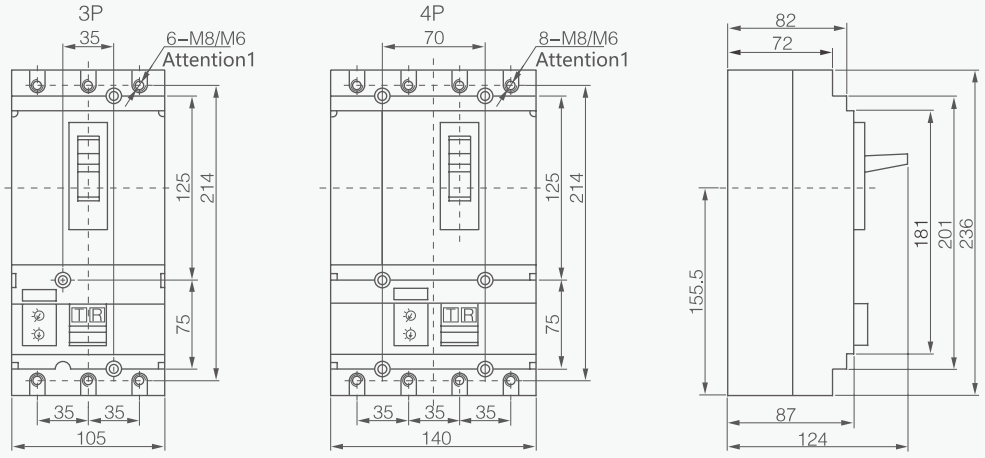

Attention1: when in>100A,Fixing screw size should be M8 ,When In ≤100A, fixing screw size should be M6.

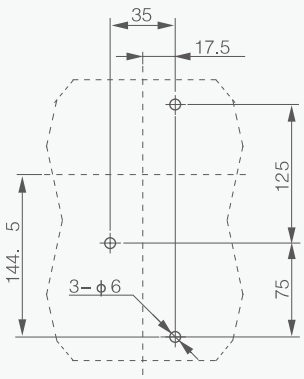

3P : Installed on the panel

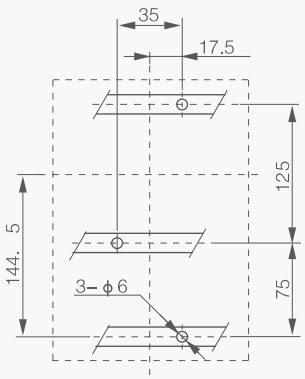

3P : Installed on leading rails

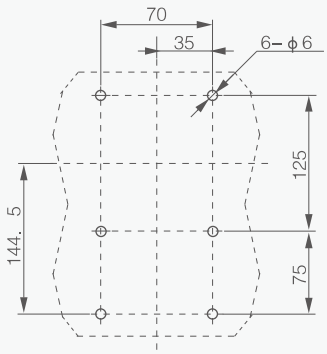

4P : Installed on the panel

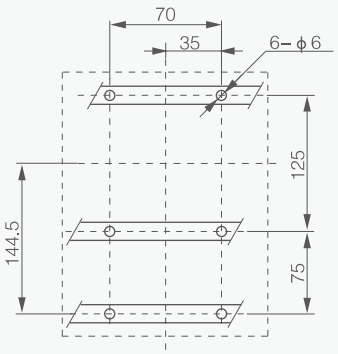

4P : Installed on leading rails

B

YCM3-400,630 (with residual current module) Overall and mounting dimensions(mm)

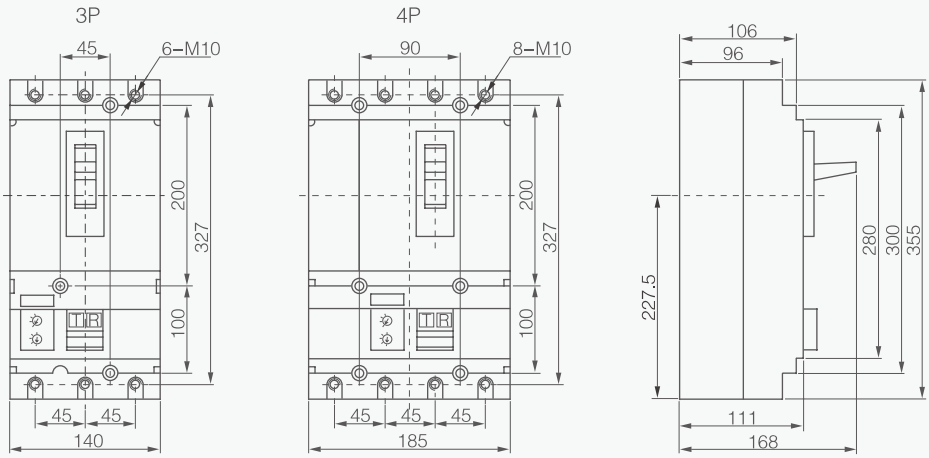

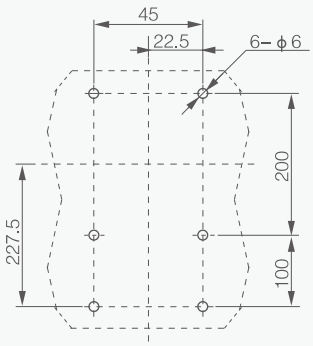

3P : Installed on the panel

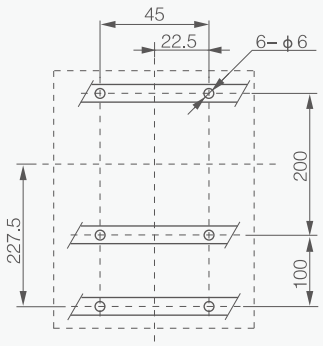

3P : Installed on leading rails

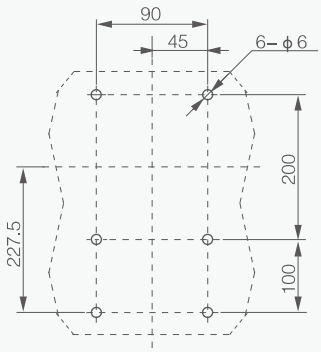

4P : Installed on the panel

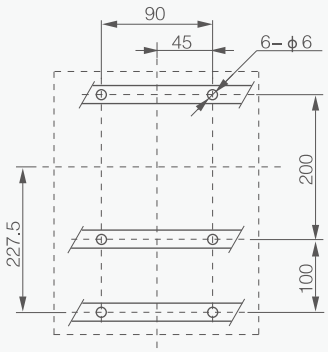

4P : Installed on leading rails

LE Residual current Action Protection device module (Leakage protection module)

Provides leakage protection for all three-pole or four-pole YCM3-100 to 630 circuit breakers. The circuit breaker with LE residual current protection module realizes the leakage protection function under the premise of maintaining the overall characteristics of the circuit breaker, and the LE module can directly act on the stripping unit.

Remote indication:
The LE module can be fitted with an auxiliary contact ,which can remotely transmit the buckle caused by leakage fault.
Power:
The LE module can be powered by the power distribution system itself, eliminating the need for any external power supply. It cancontinue to operate even with AC two-phase power supply.

Type designation

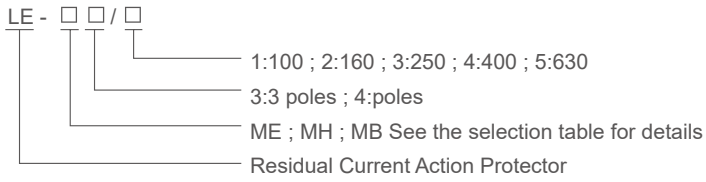

Note: LE modules can not be sold separately.

Selection of LE modules

Model	LE-MH	LE-MB
Polar number	3,4(1)	3,4(1)
YCM3-100	Yes	No
YCM3-160	Yes	No
YCM3-250	Yes	No
YCM3-400	No	Yes
YCM3-630	No	Yes
Protective features		
Sensitivity I n(A)	Adjustable 0.03-0.3-1-3-10	Adjustable 0.3/1/3/10/30
Whether the delay is adjustable	Adjustable	Adjustable
Delay settings	0-60(2)-150(2)-310(2)	0-60-150-310
Maximum break time(ms)	<40<140<300<800	<40<140<300<800
Rated voltage AC50V/60Hz	200...440-440...500	200...440-440...500

If the sensitivity is set to 30mA, the stripper is instantaneous clasp.

B

Inner accessories

Accessories of YCM3 are the same.

Model		YCM3-100	YCM2-160	YCM3-250	YCM3-630	YCM3-1600
No. of poles		3,4	3,4	3,4	3,4	3,4
Code	Accessory name					
208, 308	Alarm contact(SD)					
210, 310	Shunt release(MX)					
220, 320	Auxiliary contact(OF)					
230, 330	Under-voltage release(MN)					
240, 340	Shunt auxiliary contact(MX+MN)					
260, 360	Two groups auxiliary contacts(2OF)					
270, 370	Auxiliary contact UVT(OF+MN)					
218, 318	Shunt alarm contact(MX+SD)					
228, 328	Auxiliary alarm contact(OF+SD)					
238, 338	UVT alarm contact(MN+SD)					
248, 348	Shunt auxiliary alarm contact(MX+OF+SD)					
268, 368	Two groups aux alarm contact(2OF+SD)					
278, 378	Aux contact UVT alarm contact(OF+MN+SD)					
280, 380	Two groups aux contact and shunt(2OF+MX)					

● Alarm switch ○ Auxiliary switch □ Shunt release ■ Undervoltage release

YCM3 Series MCCB

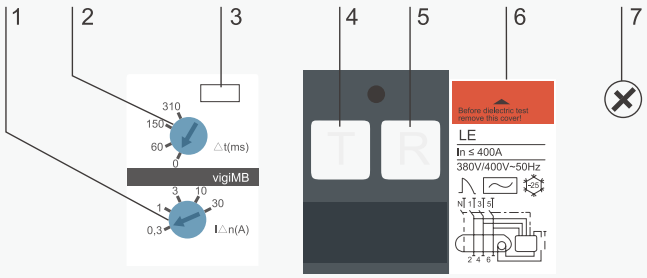

1. Sensitivity setting
2. Delay setting(for selective leakage protection)
3. Calibration of the seal Sleeve
4. Test button-used to simulate leakage failure, to periodically check leakage protection function
5. Reset button(after leakage fault buckle must be reset)
6. Nameplate
7. Location of secondary contacts

Operational safety

LE Modular A user-friendly device that requires regular testing by the user
(tested every 6 months)

Accessories

The internal accessories of the circuit breaker are installed in the inner cavity of the cover plate, and the shunt release, undervoltage release, auxiliary contact and alarm contact are all made into separate modules. Therefore, the installation is simple, convenient, safe and reliable, and the user can install the corresponding position of the circuit breaker by himself. The attached picture is as follows:

Accesspry name	Rated operating voltage	Applicable shell frame
 MX	AC220/230V AC380/400V DC220V DC110V	YCM3-100 YCM3-160 YCM3-250 YCM3-400 YCM3-630
Shunt release 	AC220/230V AC380/400V DC220V DC110V	YCM3-1600
 MJ	AC220/230V AC380/400V	YCM3-100 YCM3-160 YCM3-250 YCM3-400 YCM3-630
Undervoltage release 	AC220/230V AC380/400V	YCM3-1600

YCM3 Series MCCB

Accesspry name	Rated operating voltage	Applicable shell frame
 AX Auxiliary contact	AC220/230V AC380/400V DC220V DC110V	All shells
 AL Alarm contact	AC220/230V AC380/400V DC220V DC110V	All shells
 LE Remaining Current protection module	Sensitivity I n(A) adjustable range 0.03,0.3,1,3,10. Note: The circuit breaker can be provided as needed by the user. Only the alarm does not trip.	YCM3-100 YCM3-160 YCM3-250
		YCM3-400 YCM3-630
 P Electric operating mechanism	AC220/230V AC380/400V DC220V DC110V	YCM3-100 YCM3-160 YCM3-250
 P Electric operating mechanism	AC220/230V AC380/400V DC220V DC110V	YCM3-400 YCM3-630

YCM3 Series MCCB

Accesspry name	Applicable shell frame
 Economical extended rotating handle	YCM3-100 YCM3-160 YCM3-250 YCM3-400 YCM3-630
 Extended rotating handle	YCM3-100 YCM3-160 YCM3-250 YCM3-400 YCM3-630 YCM3-1600
 Rear connecting plate	YCM3-100 YCM3-160 YCM3-250 YCM3-400 YCM3-630
 Plug-in base (board front or behind)	YCM3-100 YCM3-160 YCM3-250 YCM3-400 YCM3-630
 Drawer base	YCM3-100 YCM3-160 YCM3-250 YCM3-400 YCM3-630
 DIN Rail Adapter	YCM3-100 YCM3-160 YCM3-250

B

Circuit breaker accessories

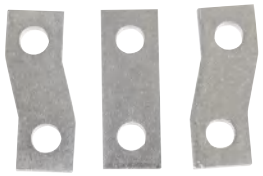

1.YCM3-100,160,200
Outer connecting plate



2.YCM3-400,630
Outer connecting plate



3.YCM3-1600
Outer connecting plate

Note: Thermomagnetic and electronic dimensions, mounting dimensions and accessories are identical.

Shunt release

For remote control of the circuit breaker opening, the shunt release can reliably open the circuit breaker between 70% and 110% US. The shunt release should be prohibited from being energized for a long time(≤ 5s).

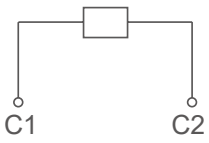

Undervoltage release

When the control voltage drops to 35% to 70%, the undervoltage release should trip and the circuit breaker should be reliably disconnected. When the control voltage is greater than or equal to 85%, the circuit breaker should be reliably closed. When the control voltage is less than 35%, it should be able to prevent the circuit breaker from closing.

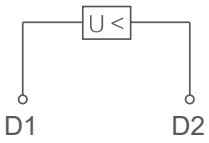

Auxiliary contact

Function: Indicates the opening and closing state of the circuit breaker.

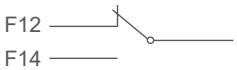

F11 When the circuit breaker is in the opening position

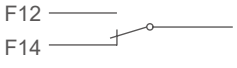

F11 When the circuit breaker is in the closing position

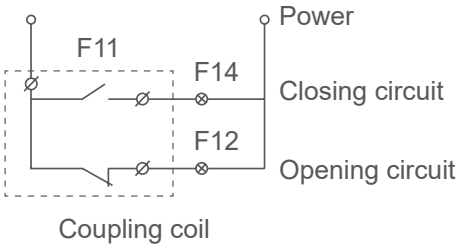

Alarm contact

Function: Indicates the possible cause of tripping of the circuit breaker
a: overload ; b: short circuit ; c: ground fault ; d: undervoltage trip operation ;
e: free trip.

When the circuit breaker is normally closed or opened, the alarm contact does not move, and only after the trip or fault trip occurs, The position of the contact changes, that is, the normally open becomes normally closed, and the normally closed becomes normally open. When the circuit breaker is buckled again, the alarm contact returns to its original position.

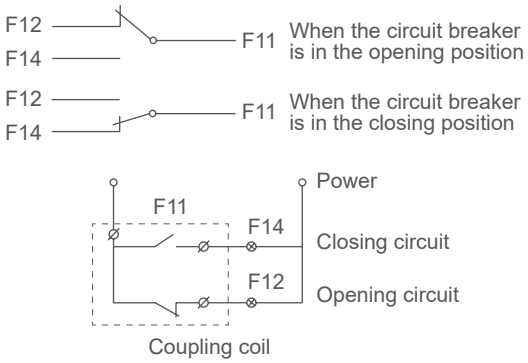

Electric operation

The main technical parameters, dimensions and installation diagrams of external accessories for YCM3 follows:

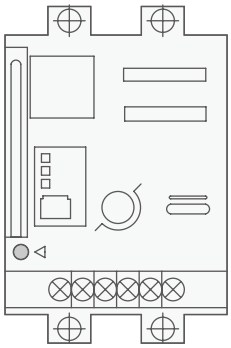

Wiring diagram

1. Counterclockwise manual operation is prohibited
2. When under manual operation, insert the handle at the starting point and rotate it 180 clockwise

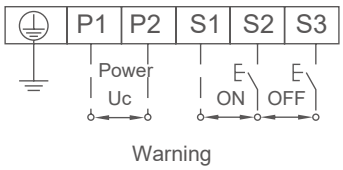

Warning

Rated voltage	DC24V, AC110/DC110V, AC230V/DC220V, AC400V
Rated insulation voltage	250V (When the rated working voltage is 400V, it is 500V)
Frequencyy	50/60Hz
Rated working system	Short-time duty
Action time	0.7~1.5s

YCM3 Series MCCB

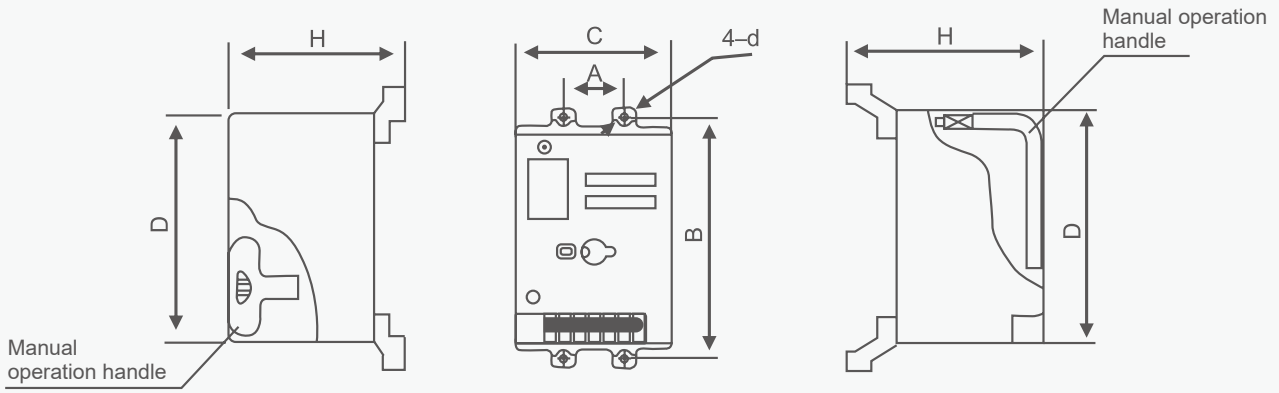

Type	Overall and mounting dimensions(mm)						Action current	Mechanical lifespan (times)	Motor Power(W)
	A	B	C	D	H	d			
YCM3-100/160/250	95	152	90	116	109	Φ3.5	≤ 0.5	14000	14
YCM3-400/630	45	200	130	176	152	Φ5.5	≤ 2	6000	35

Aluminum terminal block



Built-in type

Frame	Maximum rated current	Number of holes	Wide	Wiring aperture	Maximum wiring
400A	400A	1	30mm	Φ24	250 mm²
250A	250A	1	23mm	Φ16	180mm²
160A	160A	1	17.8mm	Φ14	125mm²
100A	100A	1	16mm	Φ10	78mm²



External type

Frame	Maximum rated current	Number of holes	Wide	Wiring aperture	Maximum wiring
1600A	1600A	4	58mm	Φ24	350mm²
630A	630A	2	30mm	Φ20	250mm²
400A	400A	2	30mm	Φ22	250mm²
250A	250A	1	23mm	Φ16	180mm²
160A	160A	1	17.8mm	Φ14	125mm²
100A	100A	1	15.9mm	Φ11	80mm²

YCM3 Series MCCB

TM12.5A-50A

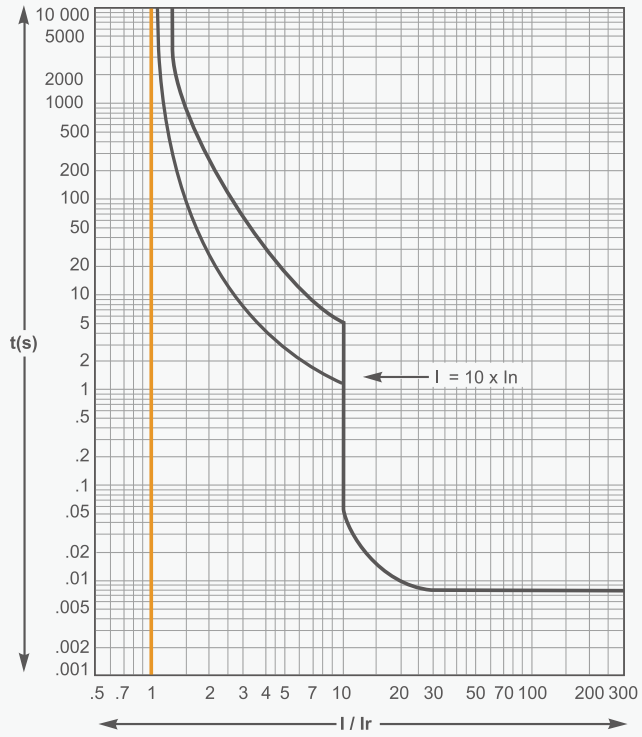

TM63A-100A

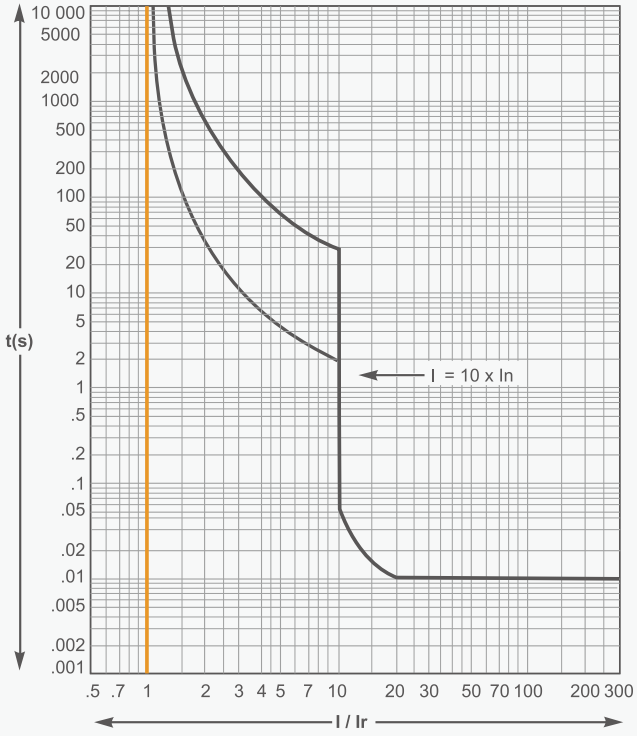

TM125A-250A

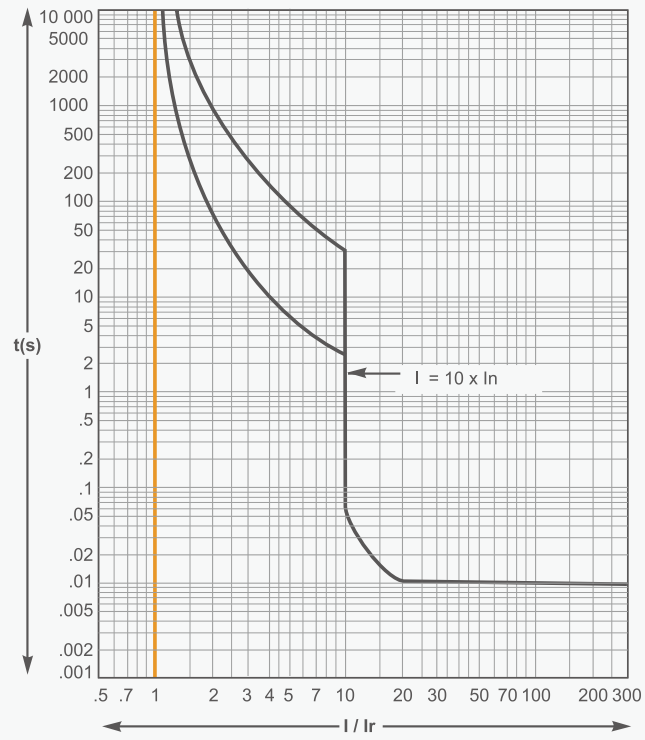

TM315A-600A

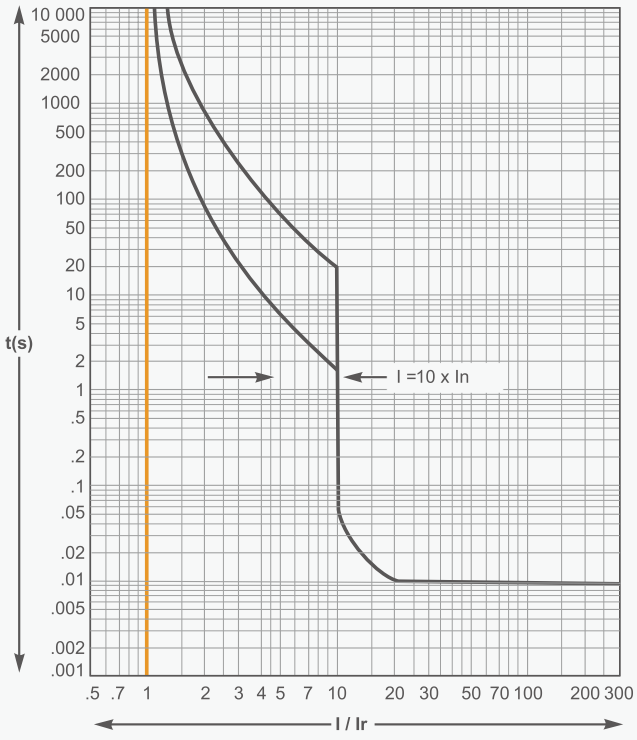

B

YCM3E electronic (2.0)100-630A

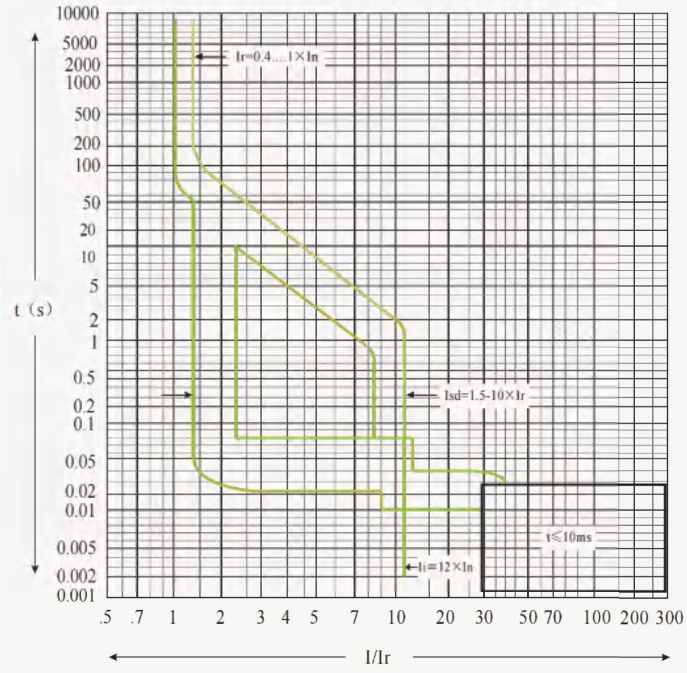

Micrologic 5.0 Tripping curve In100 - 630 A

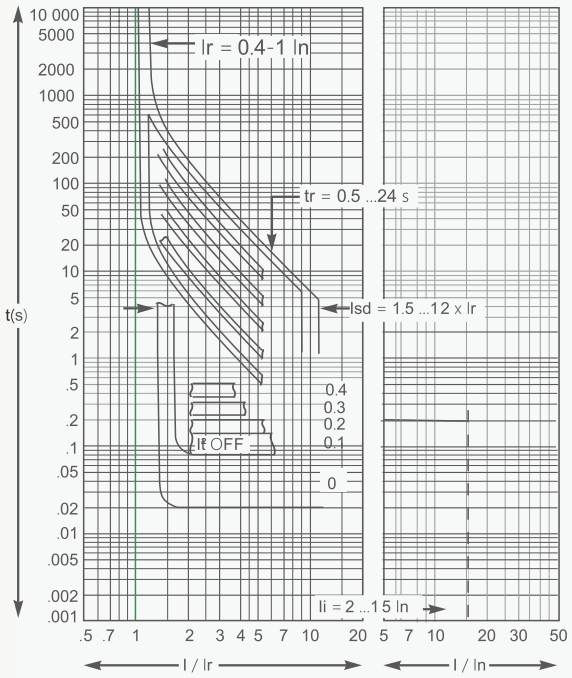

Micrologic 6.0 tripping curve In100-630 A

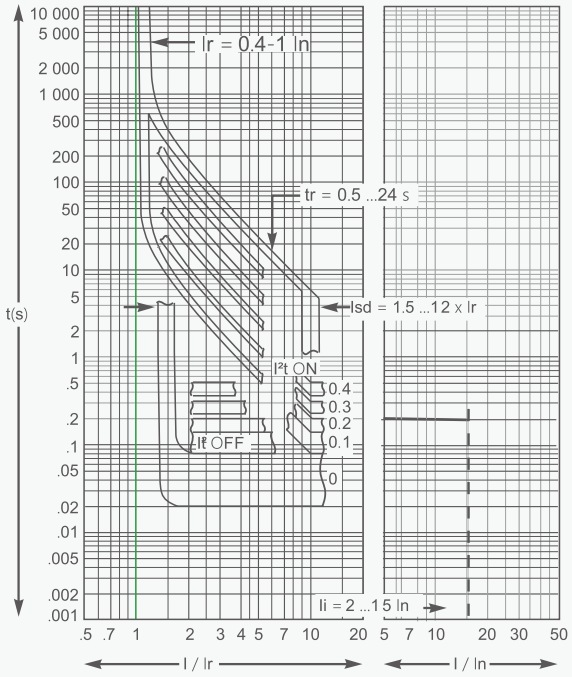

(Earth fault protection)

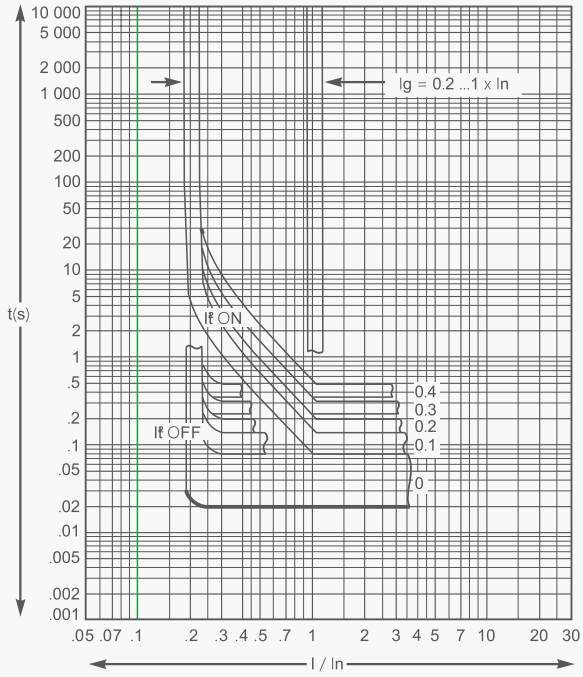

YCM6i Series Molded Case Circuit Breaker (MCCB)



General

The YCM6i series molded case circuit breakers (hereinafter referred to as circuit breakers) are suitable for AC circuits with a frequency of 50Hz (or 60Hz). Their rated insulation voltage is 1000V (800V for the YCM6i-63 model), rated working voltage of 400V/690V, and rated working current up to 1000A. They are used for infrequent conversion of circuits and infrequent starting of motors. The circuit breakers have overload, short-circuit, and undervoltage protection functions, which can protect lines and power supply equipment from damage.

According to their rated ultimate short-circuit breaking capacity, the circuit breakers are divided into Type L (standard type) and Type M (high breaking type).

The circuit breakers feature small size, high breaking capacity, short arcing time, and vibration resistance.

The circuit breakers have an isolation function, and their corresponding symbol is “ ”

Compliance with standards: IEC 60947-2.

The circuit breakers allow reverse incoming lines.

Type designation

YC M 6i - □□□ / □□□□

- N-pole type: A, B(see Note 4)
- Application code (see Note 3)
- Tripper mode and accessory code (see Table 5)
- Number of poles
- Operation mode (see Note 2)
- Level of rated ultimate short-circuit breaking capacity (see Note 1)
- Frame-level rated current
- Design code
- Molded case circuit breaker
- Enterprise code

Notes:

Classified into Type L (standard type) and Type M (high breaking type) according to the level of rated ultimate short-circuit breaking capacity.

No code for direct handle operation; code “P” for electric operation; code “Z” for rotating handle operation.

No code for power distribution circuit breakers; code “2” for motor protection circuit breakers.

The products are divided into 3-pole and 4-pole types. Among 4-pole products, the neutral pole (N-pole) has four types:

Type A: No overcurrent tripper is installed on the N-pole, and the N-pole is always on and does not switch on or off together with the other three poles.

Type B: No overcurrent tripper is installed on the N-pole, and the N-pole switches on and off together with the other three poles (the N-pole switches on first and off last).

YCM6i Series Molded Case Circuit Breaker (MCCB)

Operating conditions

1. Ambient temperature: -5°C ~ +40°C
2. Altitude: 2000m
3. Humidity: The relative humidity of air shall not exceed 50% at +40°C.
4. Pollution degree: Grade 3
5. Installation category: Category III
6. Places free from rain and snow erosion.
7. Places free from metals, gases that damage insulation, and conductive dust.
8. Places free from explosive media and media that are corrosive enough to damage the product.
9. Installation method: Vertical installation, horizontal installation
10. Transportation and Storage Conditions:Between -25°C and +55°C under normal conditions.
11. Short-term temperature: It can reach up to +70°C for a short period (24 hours).

Protection Characteristics

Tripper Operation Performance

For Power Distribution

Table 1

Rated Operating Current of Tripper (In)	Thermal Tripper (Reference Temperature 40°C)		Electromagnetic Tripper Operating Current (A)	Remarks
	1.05In [Cold State] Non-operation Time	1.30In (Hot State) Operation Time		
10 < In ≤ 63	≥1	<1	10In ± 20%	Power distribution protector. Note: For 1000A, it's 7In ± 20%
63 < In ≤100	≥2	<2	10In ± 20%	
100 < In ≤1600	≥2	<2	5In ± 20% 7In ± 20% 10In ± 20%	

Note:Circuit breakers with a rated current less than 160A do not have tripping at 5In current.

For Motor Protection

Table 2

Rated Operating Current of Tripper (In) (A)	Thermal Tripper (Reference Temperature 40°C)				Electromagnetic Tripper Operating Current (A)
	1.0In [Cold State] Non-operation Time(h)	1.20In (Hot State) Operation Time(h)	1.50In [Hot State] Operation Time(h)	7.20In (Cold State) Operation Time(h)	-
10 < In ≤630	≥2	≤2	8min	6s<Tp < 20s	12In ± 20%

Power Loss

Circuit Breaker Power Loss

Table 3

Model	Energized current	Three-pole Total Power Loss (W)		
		Front-panel wiring, rear-panel wiring	Plug-in front-panel wiring	Plug-in rear-panel wiring
YCM6i-63/125 (L, M) Direct heating type (10A - 25A)	25	28	/	32
YCM6i-63/125 (L, M) Indirect heating type(32A - 63A)	63	20	/	24
YCM6i-160 (L, M) Indirect heating type(32A - 100A)	125	35	37	40
YCM6i-250(L, M)	250	62	66	70
YCM6i-400/530(L, M)	400	115	120	125
YCM6i-800(L ,M)	630	187	193	200
YCM6i-1000(M)	800	262	/	300

Derating Factor

Derating Factor of Circuit Breaker with Ambient Temperature Change

Table 4

Model	Derating Factor(In)				
	+40°C	+45°C	+50°C	+55°C	+60°C
YCM6i-63/125	1	0.94	0.88	0.81	0.74
YCM6i-160	1	0.96	0.91	0.85	0.78
YCM6i-250	1	0.97	0.94	0.90	0.86
YCM6i-400/630	1	0.95	0.89	0.82	0.75
YCM6i-800	1	0.94	0.88	0.82	0.76
YCM6i-1000	1	0.94	0.87	0.80	0.72

Notes: The above derating factors are measured under the frame-level rated current.

YCM6i Series Molded Case Circuit Breaker (MCCB)

Technical data

Frame rating current Inm (A)			63/125		160		250/320		400		630		800		1000	
Rated current In (A), 40°C			10, 16, 20, 25, 32, 40, 50, 63, 80, 100, 125		25, 32, 40, 50, 63, 80, 100, 125, 160		125, 160, 180, 200, 225, 250,		250, 315, 350, 400		400, 500, 630		630, 700, 800		800, 1000	
insulation voltage Ui (V)			800		1000		1000		1000		1000		1140		1140	
Rated impulse withstand voltage Uimp (kV)			8		12		12		12		12		12		12	
Rated operating voltage Ue (V)			400, 690		400, 690		400, 690		400, 690		400, 690		400, 690		400, 690	
Selectivity category			A		A		A		A		A		A		A	
Arcing distance (mm)			< 50		< 50		< 50		< 50		< 100		< 100		< 120	
Operating performance (times)	Electrical life (with current supply)		1500		1000		1000		1000		1000		500		500	
	Mechanical life (without current supply)		8500		7000		7000		4000		4000		2500		2500	
Breaking capacity class			L	M	L	M	L	M	L	M	L	M	L	M	L	M
Number of poles	3P		■	■	■	■	■	■	■	■	■	■	■	■	■	■
	4P		■	■	■	■	■	■	■	■	■	■	■	■	■	■
Rated ultimate short-circuit breaking capacity Icu (kV)	Ue=AC400V		35	50	35	85	35	85	50	100	50	100	75	100	75	100
Rated service short-circuit breaking capacity Ics (kV)			20	35	22	50	22	50	35	75	35	75	50	65	50	65
Overall dimensions Width (W) × Height (H) × Depth (D) 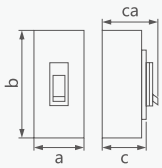	W	3P	75		92	72	107		150		150		182		210	
		4P	100		122	122	142		198		198		240		280	
	H		130		130	130	165		257		257		270		280	
	D		67		77.5		78		110		110		118		120	

Notes: The symbol " " indicates not applicable, The symbol " " indicates applicable.

Notes: For models 63-125, the minimum instantaneous operating current is 40A, and those below 40A are equivalent to 40A. For the 160 frame size, the instantaneous operating current below 50A is equivalent to 50A.

Note: For the 2P version of models 125-250, refer to the detailed dimension page for overall and installation dimensions.

YCM6i Series Molded Case Circuit Breaker (MCCB)

Characteristic Curve

Description: The characteristic curve is measured under cold conditions and three-phase load.

Current-temperature characteristic

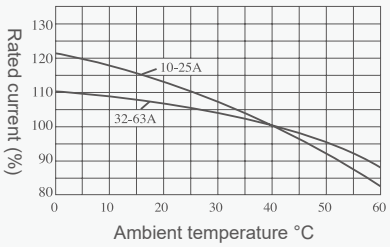

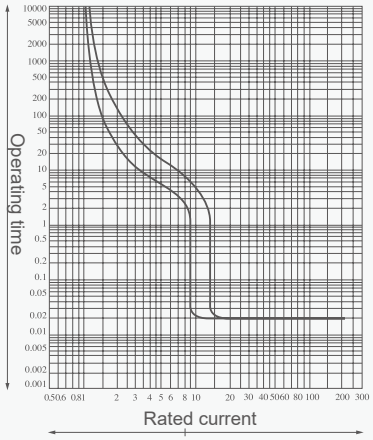

Time-current characteristic curve of YCM6i-63/125L, M

Current-temperature characteristic

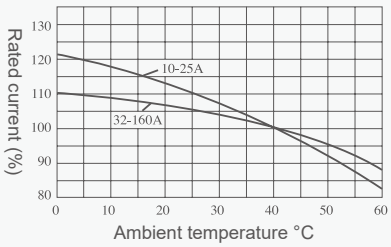

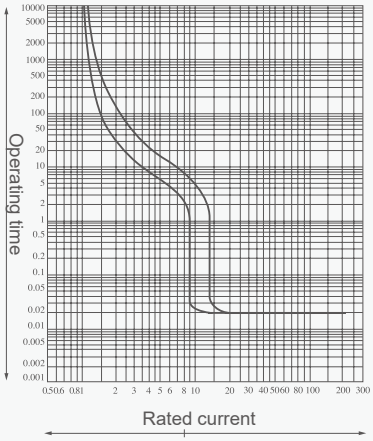

Time-current characteristic curve of YCM6i-160L, M

Current-temperature characteristic

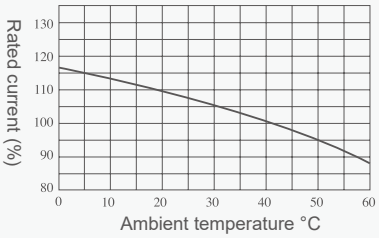

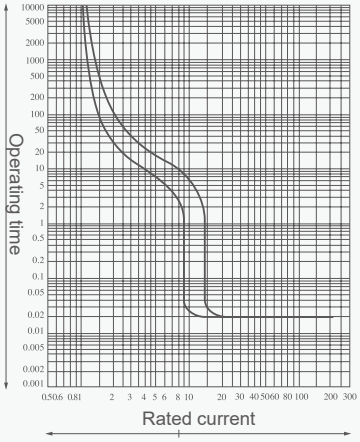

Time-current characteristic curve of YCM6i-250/320L, M

Current-temperature characteristic

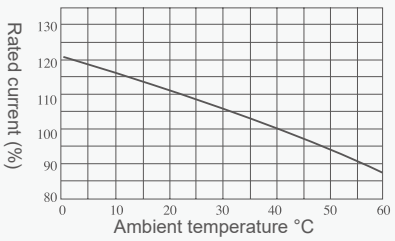

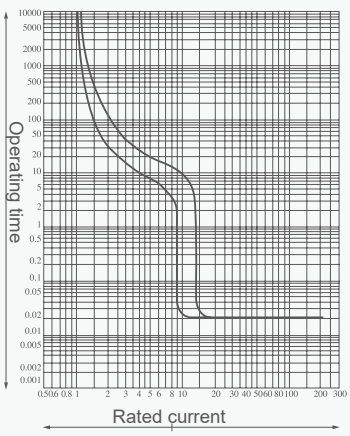

Time-current characteristic curve of YCM6i-400L, M

Current-temperature characteristic

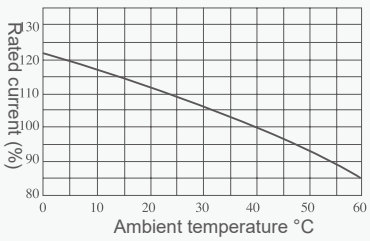

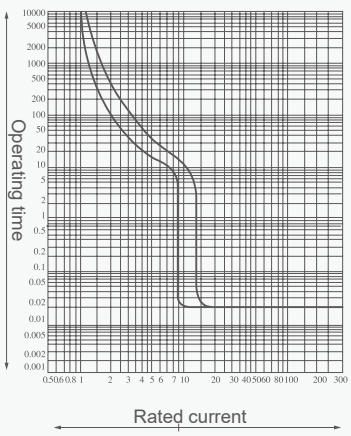

Time-current characteristic curve of YCM6i-630L, M

Current-temperature characteristic

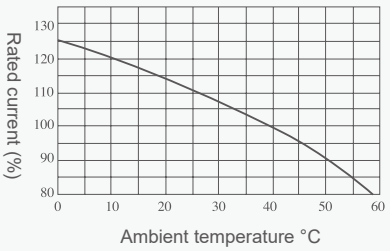

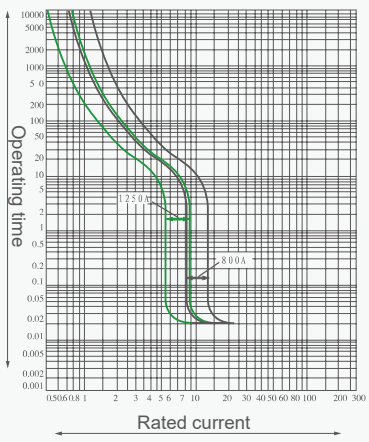

Time-current characteristic curve of YCM6i-800L, M

YCM6i Series Molded Case Circuit Breaker (MCCB)

Inner accessories

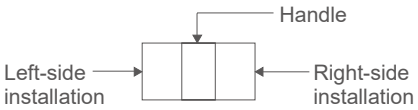

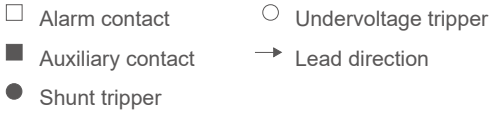

Model		YCM6i-63,125	YCM6i-250/320	YCM6i-400/630	YCM6i-800	YCM6i-1000
No. of poles		3,4	3,4	3,4	3,4	3,4
Code	Accessory name					
200, 300	Alarm contact					
208, 308	Shunt release					
210, 310	Auxiliary contact					
220, 320	Undervoltage release					
230, 330	Shunt release, auxiliary contact					
240, 340	Shunt release, undervoltage release					
250, 350	Two sets of auxiliary contacts					
260, 360	Auxiliary contact, undervoltage release					
270, 370	Shunt release, alarm contact					
218, 318	Auxiliary contact, alarm contact					
228, 328	Undervoltage release, alarm contact					
238, 338	Shunt release, auxiliary contact, alarm contact					
248, 348	Two sets of auxiliary contacts, alarm contact					
268, 368	Auxiliary contact, undervoltage release, alarm contact					
278, 378	Auxiliary contact, undervoltage release, alarm contact					

Note:

200: Indicates a circuit breaker with only an electromagnetic release; 300: Indicates a circuit breaker with a thermal-electromagnetic release; 000: Indicates a circuit breaker without thermal and electromagnetic releases.

For 4-pole circuit breakers of YCM6i-63, 125, and 250 series, when the N-pole is of Type A or Type D, the codes 240, 340, 360, 260, 268, and 368 are not applicable.

For YCM6i-63, YCM6i-125, and YCM6i-250 series, the auxiliary contacts under specifications 220, 320, 240, 340, 270, and 370 can be provided as two pairs of contacts (i.e., two normally open and two normally closed contacts); those under specifications 260 and 360 can be provided as three pairs of contacts (i.e., three normally open and three normally closed contacts). However, this must be specified when placing an order.

YCM6i Series Molded Case Circuit Breaker (MCCB)

Overall and mounting dimensions(mm)

YCM6i-63/125 MCCB

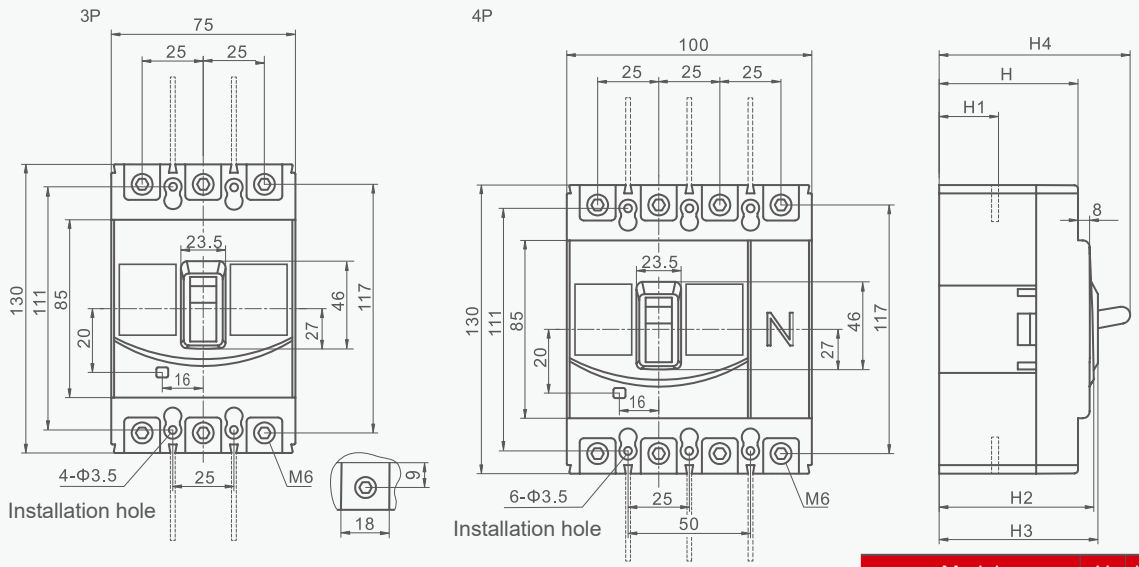

Model	H	H1	H2	H3	H4
YCM6i-63/125/3P	57	26	67	71	84.5
YCM6i-63/125/4P					

YCM6i-63/125 Diagram of Large Hole Dimensions for Cabinet Door

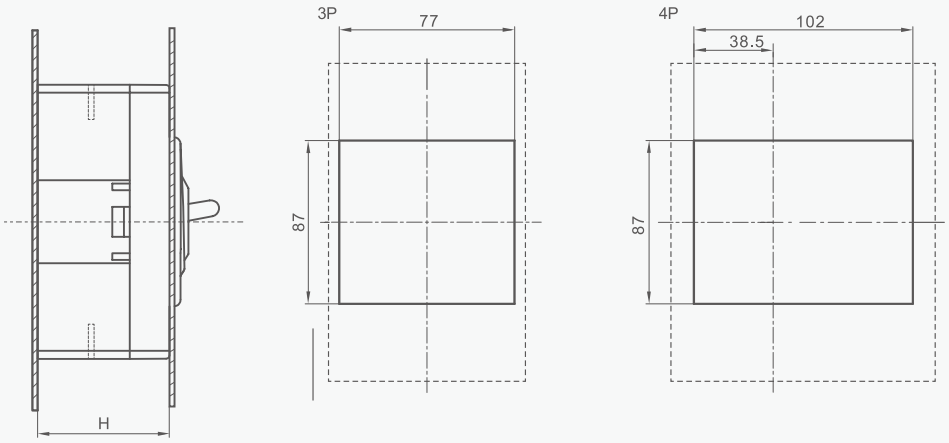

Model	H
YCM6i-63/125/3P	57
YCM6i-63/125/4P	

YCM6i-63/125 Diagram of Small Hole Dimensions for Cabinet Door Installation

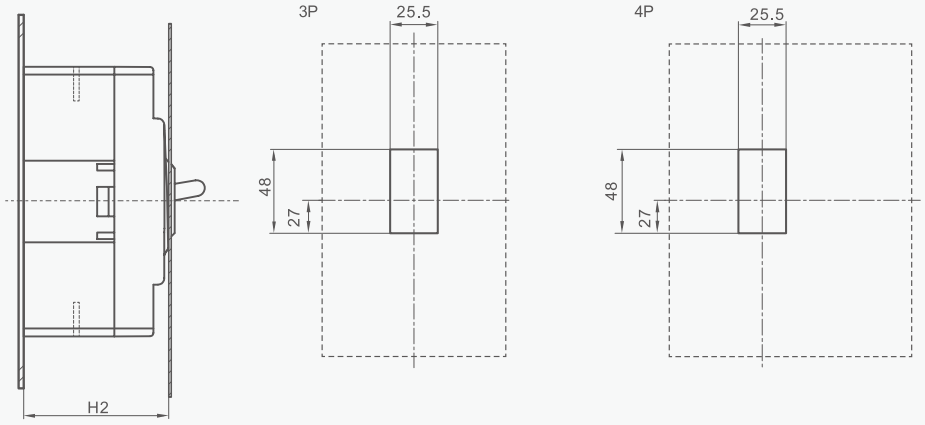

Note: It is recommended to open a large hole as shown in the above diagram. Since the outer surface of the product handle is curved,opening a small hole will affect the appearance.

Model	H2
YCM6i-63/125/3P	65.5
YCM6i-63/125/4P	67

YCM6i Series Molded Case Circuit Breaker (MCCB)

Overall and mounting dimensions(mm)

YCM6i-63/125 MCCB(Rear-panel Wiring)

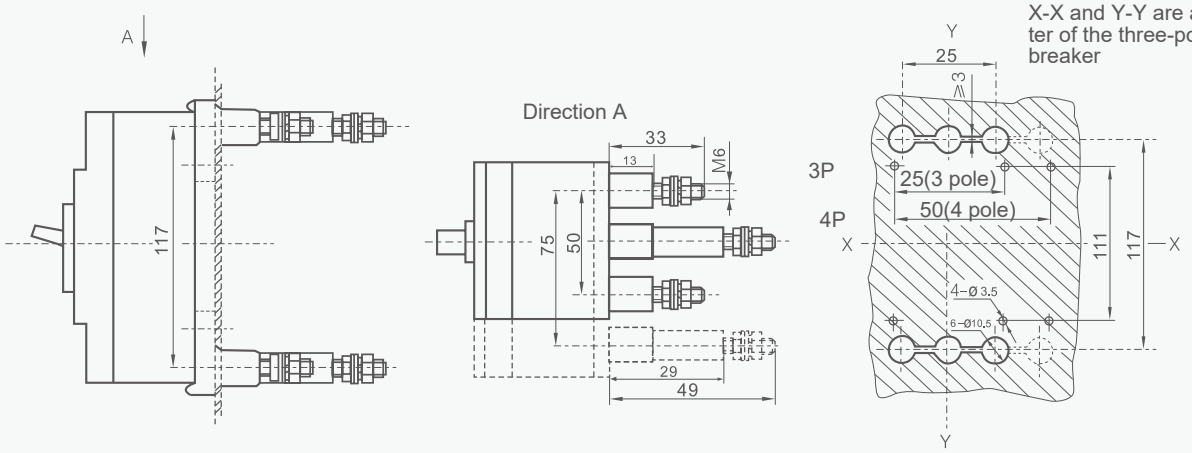

X-X and Y-Y are at the center of the three-pole circuit breaker

Opening dimensions of the rear-panel wiring mounting plate

YCM6i-63/125 MCCB(Plug-in Rear-panel Wiring)

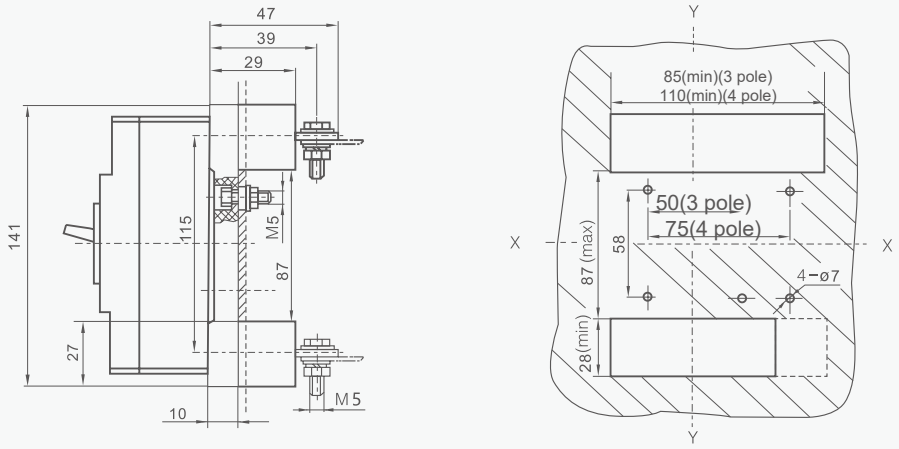

X-X and Y-Y are at the center of the three-pole circuit breaker

Dimensions of the plug-in mounting plate

YCM6i Series Molded Case Circuit Breaker (MCCB)

YCM6i-160 MCCB

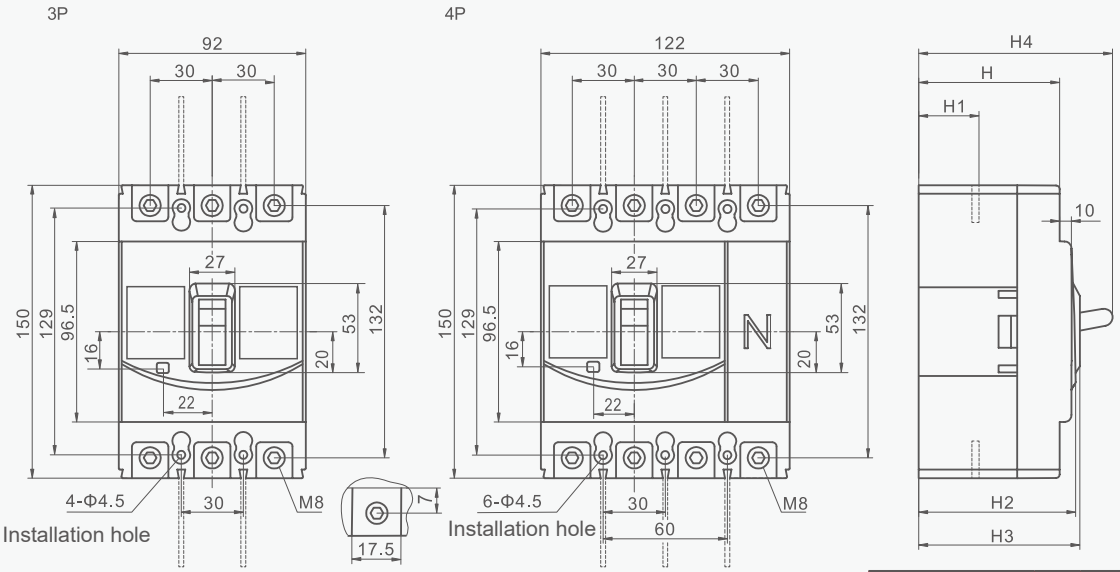

Model	H	H1	H2	H3	H4
YCM6i-160/3P	65	23.5	77.5	79.5	94.5
YCM6i-160/4P					

YCM6i-160 Diagram of Large Hole Dimensions for Cabinet Door

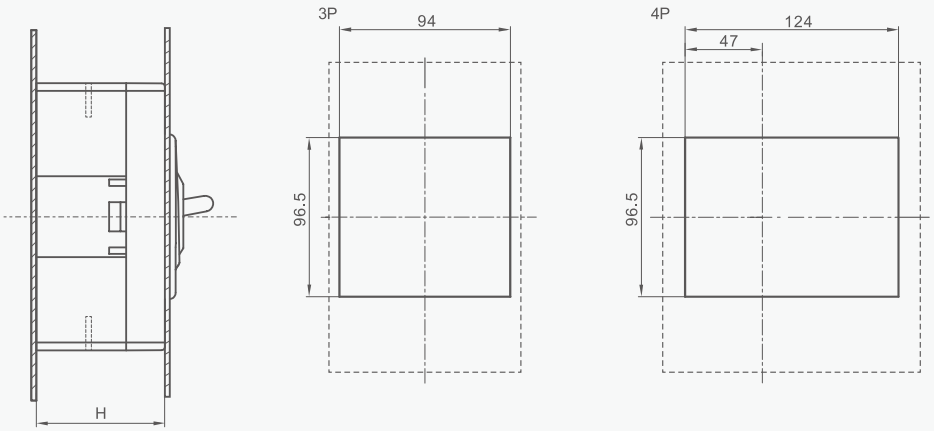

Model	H
YCM6i-160/3P	65
YCM6i-160/4P	65

YCM6i-160 Diagram of Small Hole Dimensions for Cabinet Door Installation

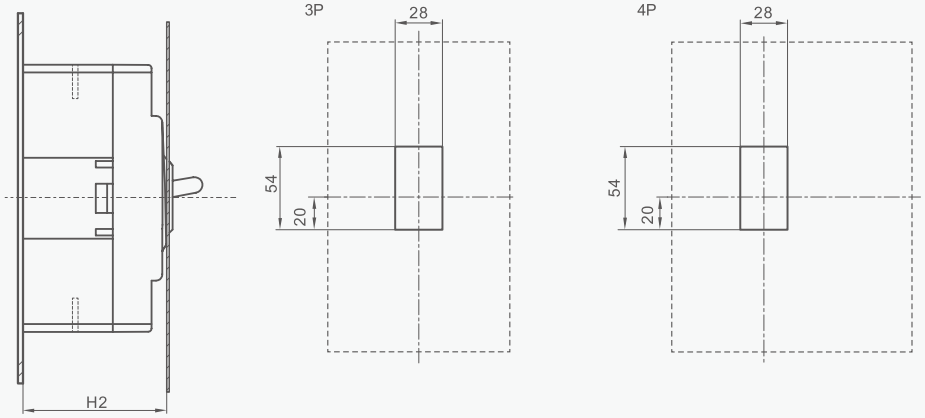

Note: It is recommended to open a large hole as shown in the above diagram. Since the outer surface of the product handle is curved,opening a small hole will affect the appearance.

Model	H2
YCM6i-160/3P	77.5
YCM6i-160/4P	77.5

YCM6i Series Molded Case Circuit Breaker (MCCB)

YCM6i-160 MCCB(Rear-panel Wiring)

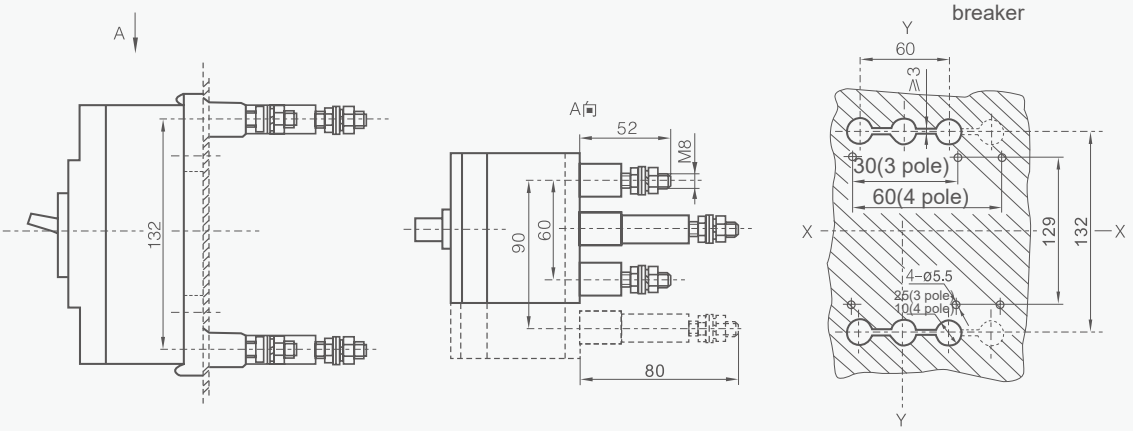

Opening dimensions of the rear-panel wiring mounting plate

YCM6i-160 MCCB(Plug-in Rear-panel Wiring)

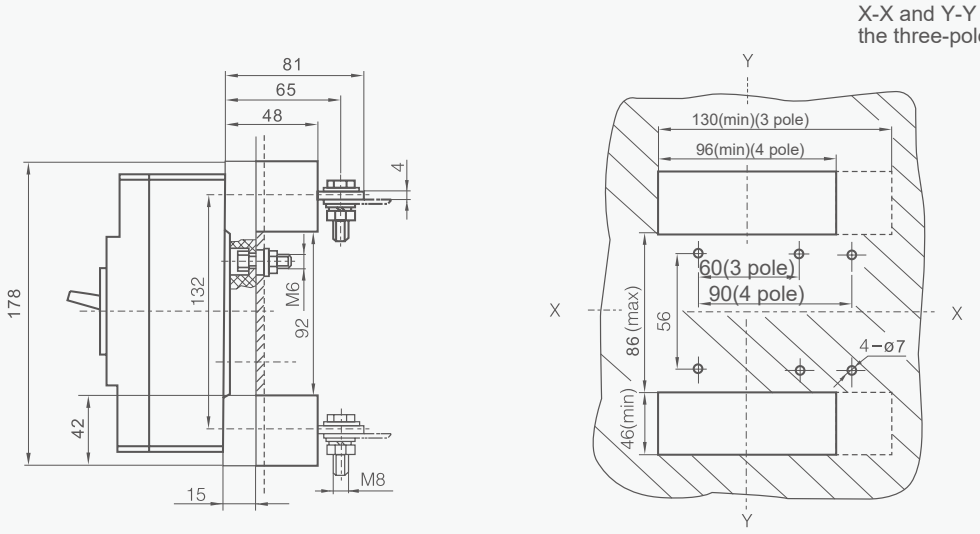

Dimensions of the plug-in mounting plate

YCM6i Series Molded Case Circuit Breaker (MCCB)

YCM6i-250 MCCB

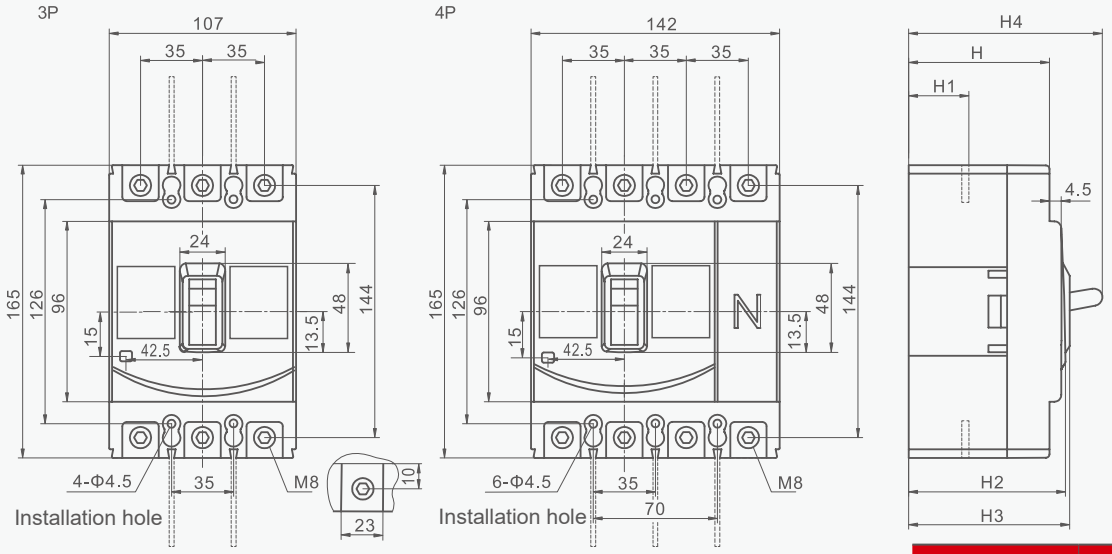

Model	H	H1	H2	H3	H4
YCM6i-250/3P	69	22	77	81	97
YCM6i-250/4P	69	22	77	81	97

YCM6i-250 Diagram of Large Hole Dimensions for Cabinet Door

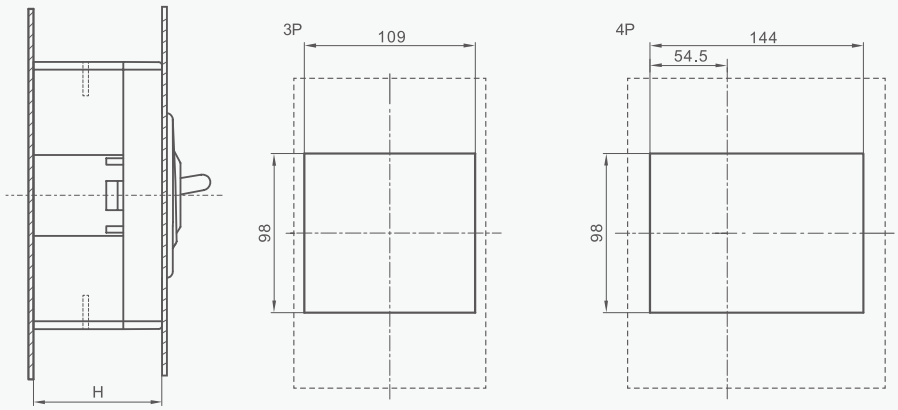

Model	H
YCM6i-250/3P	69
YCM6i-250/4P	69

YCM6i-250/320 Diagram of Small Hole Dimensions for Cabinet Door Installation

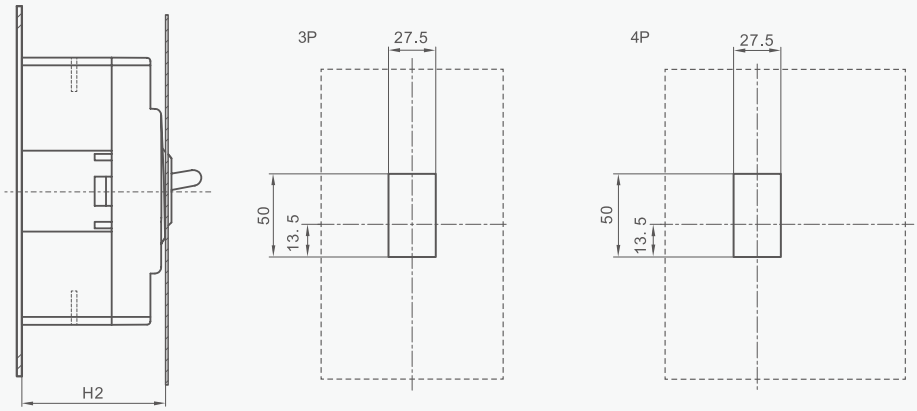

Note: It is recommended to open a large hole as shown in the above diagram. Since the outer surface of the product handle is curved,opening a small hole will affect the appearance.

Model	H2
YCM6i-250/3P	77
YCM6i-250/4P	77

B

YCM6i-250 MCCB(Rear-panel Wiring)

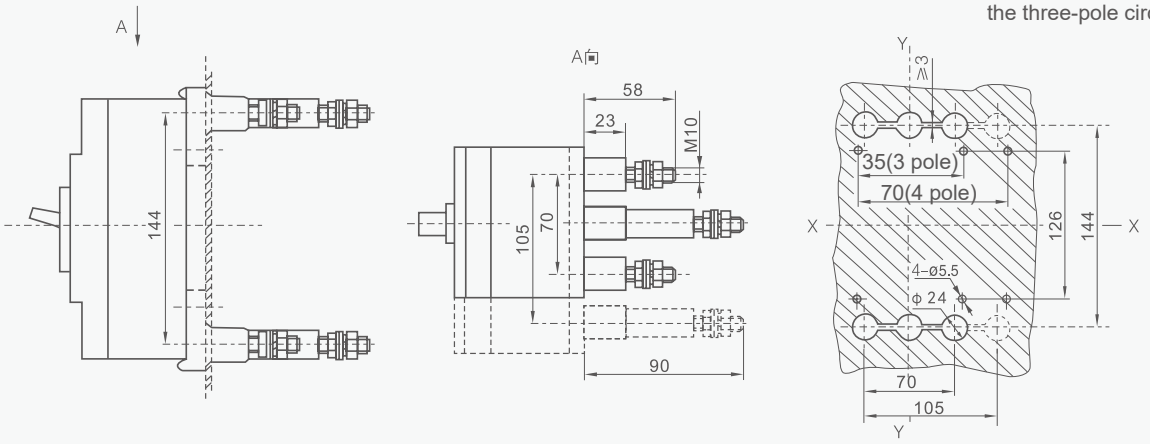

Opening dimensions of the rear-panel wiring mounting plate

YCM6i-250 MCCB(Plug-in Rear-panel Wiring)

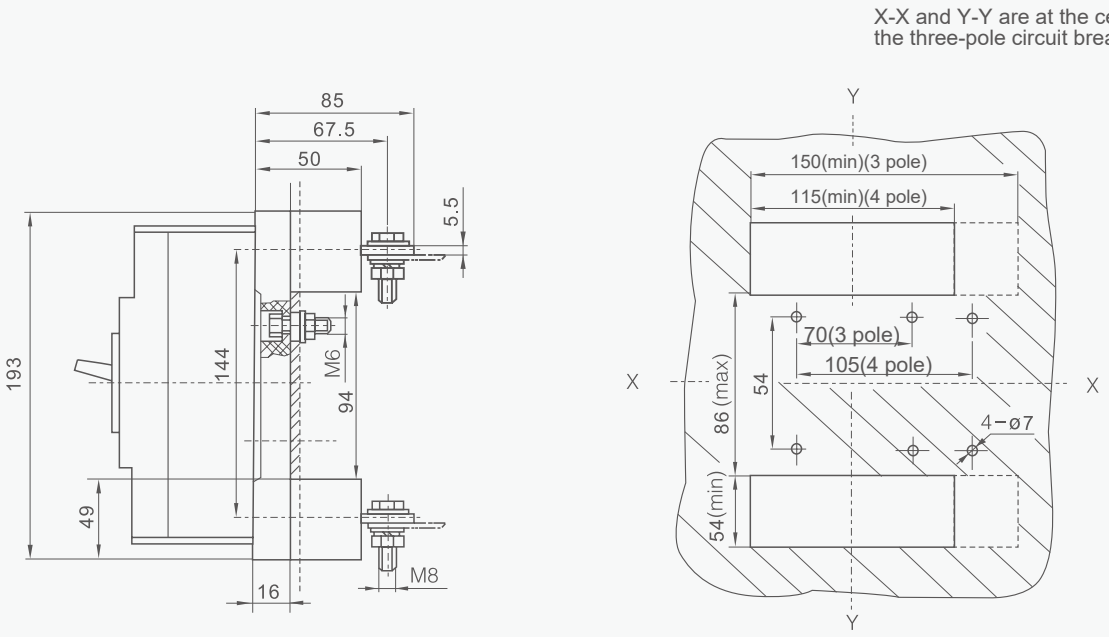

Dimensions of the plug-in mounting plate

YCM6i Series Molded Case Circuit Breaker (MCCB)

YCM6i-400/630 MCCB

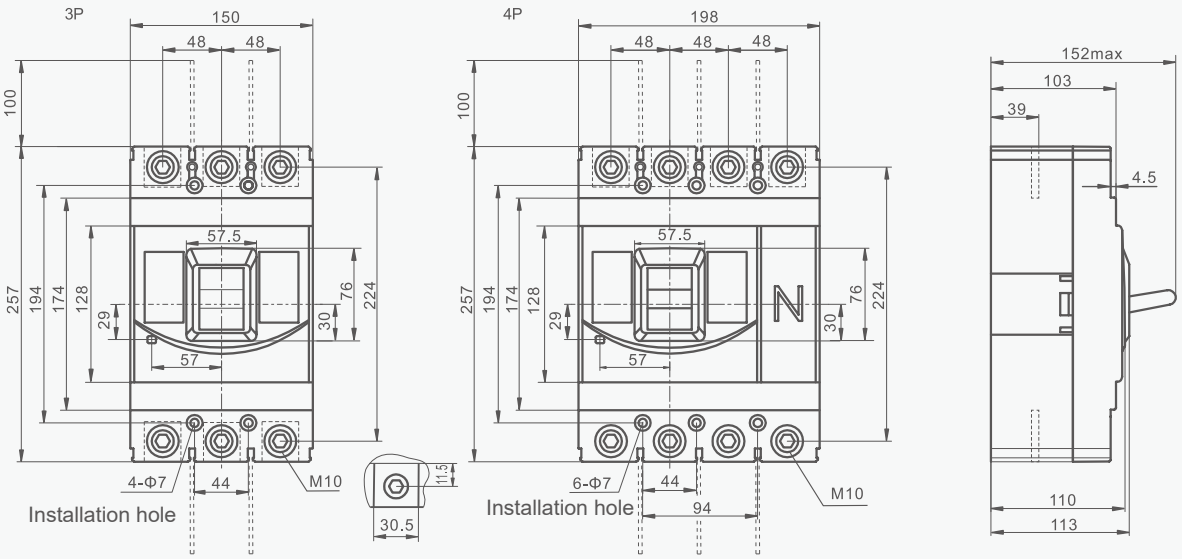

YCM6i-400/630 Diagram of Large Hole Dimensions for Cabinet Door

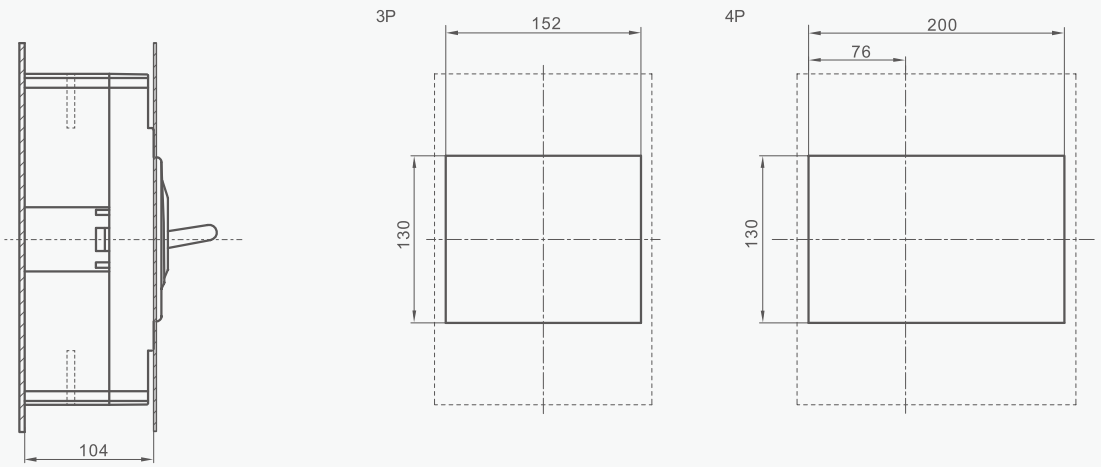

YCM6i-400/630 Diagram of Small Hole Dimensions for Cabinet Door Installation

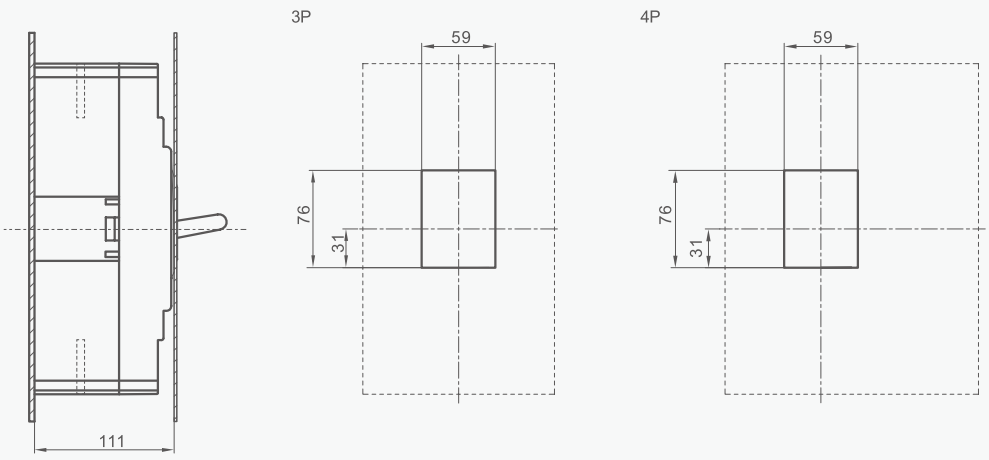

Note: It is recommended to open a large hole as shown in the above diagram. Since the outer surface of the product handle is curved,opening a small hole will affect the appearance.

YCM6i Series Molded Case Circuit Breaker (MCCB)

YCM6i-400/630 MCCB(Rear-panel Wiring)

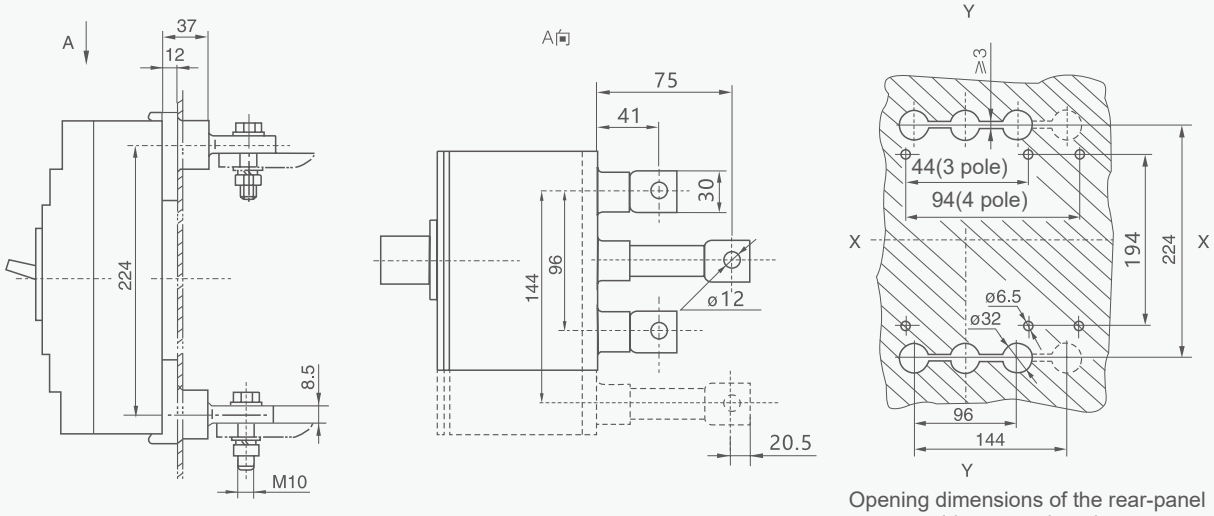

Opening dimensions of the rear-panel wiring mounting plate

YCM6i-400/630 MCCB(Plug-in Rear-panel Wiring)

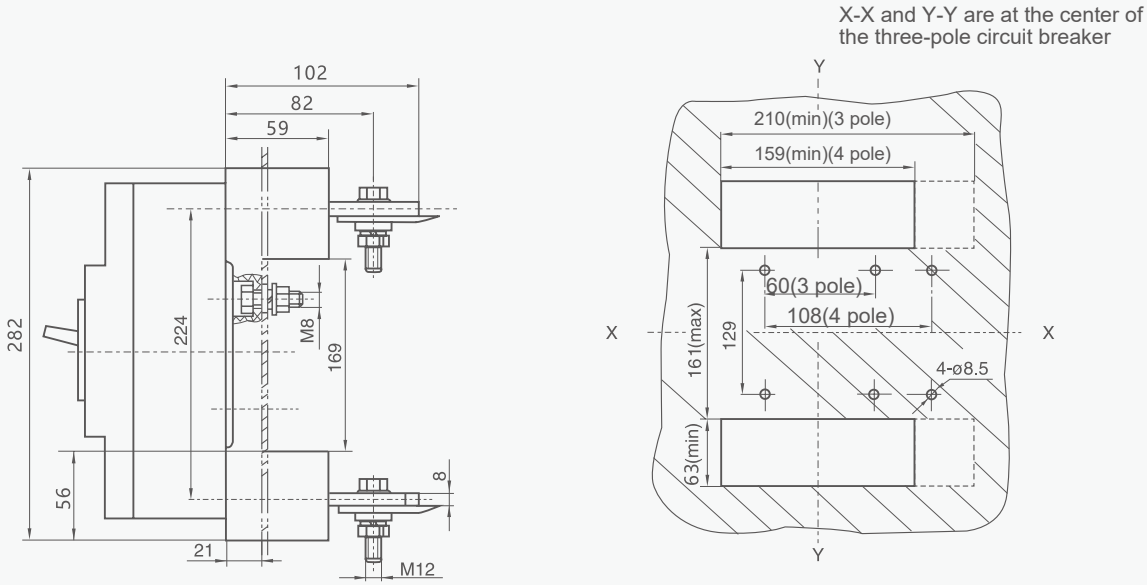

Dimensions of the plug-in mounting plate

YCM6i Series Molded Case Circuit Breaker (MCCB)

YCM6i-800 MCCB

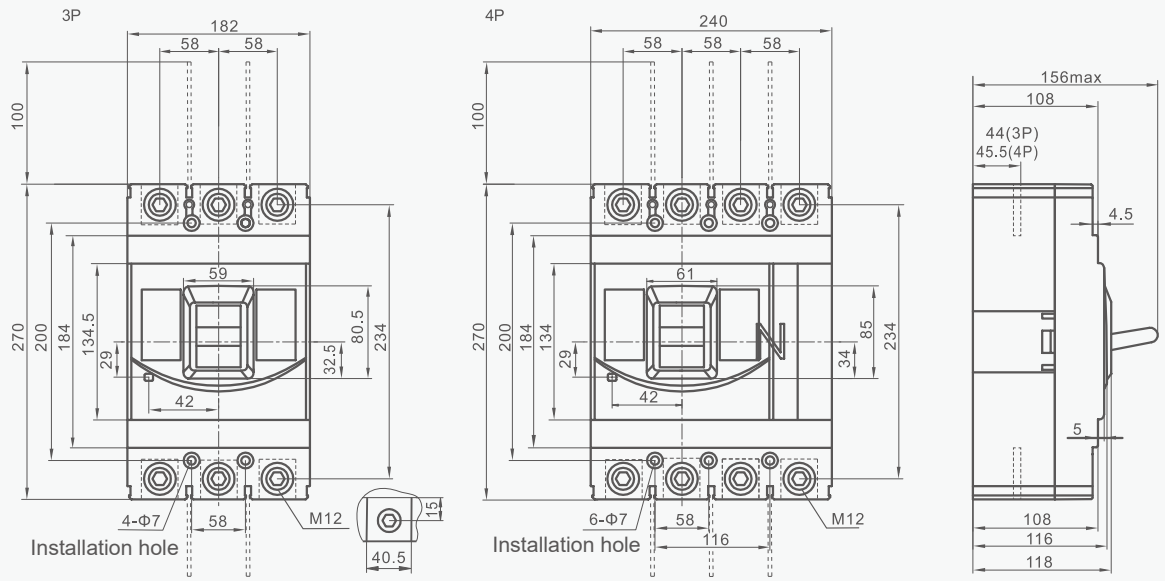

YCM6i-800 Diagram of Large Hole Dimensions for Cabinet Door

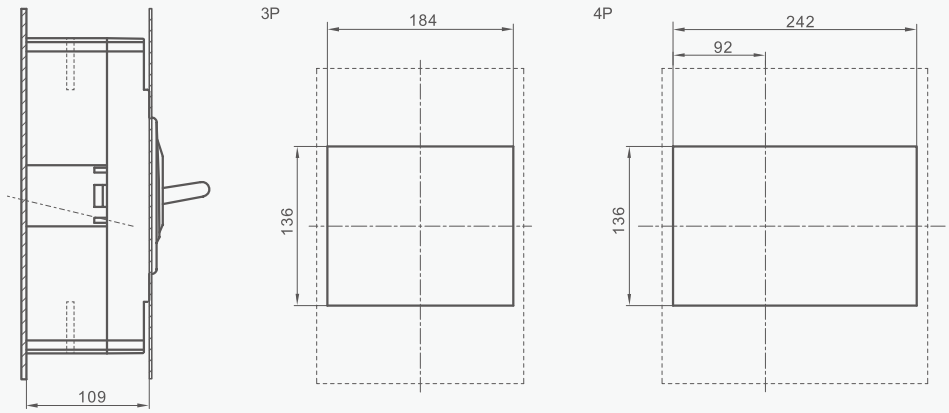

YCM6i-800 Diagram of Small Hole Dimensions for Cabinet Door Installation

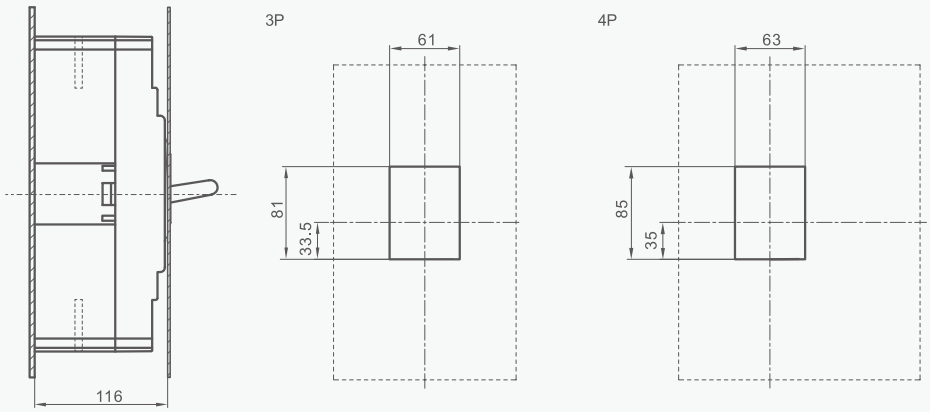

Note: It is recommended to open a large hole as shown in the above diagram. Since the outer surface of the product handle is curved,opening a small hole will affect the appearance.

B

YCM6i-800 MCCB(Rear-panel Wiring)

X-X and Y-Y are at the center of the three-pole circuit breaker

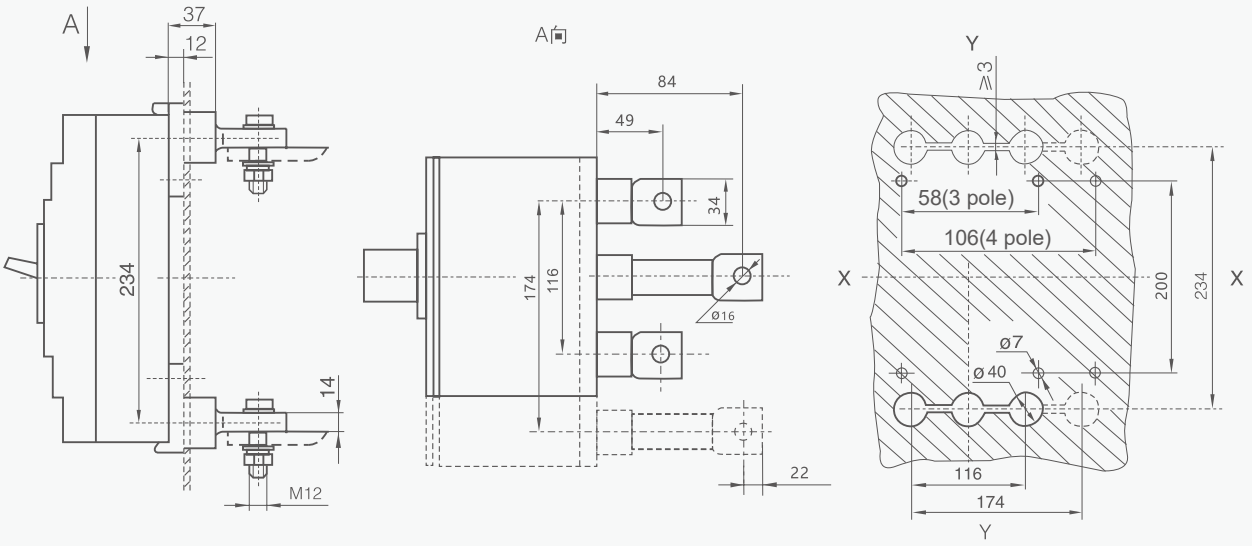

Opening dimensions of the rear-panel wiring mounting plate

YCM6i-800 MCCB(Plug-in Rear-panel Wiring)

X-X and Y-Y are at the center of the three-pole circuit breaker

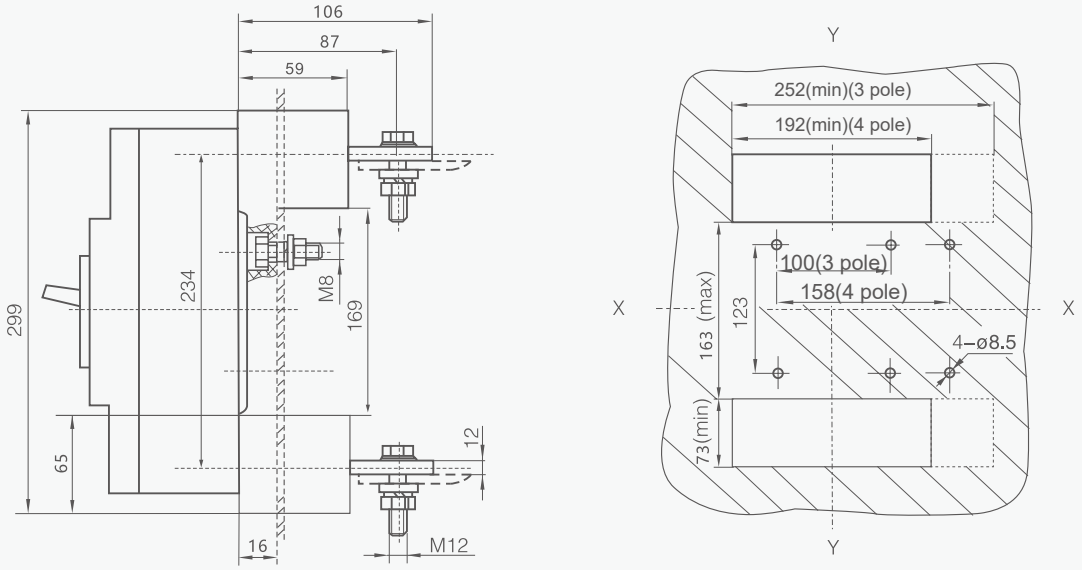

Dimensions of the plug-in mounting plate

YCM6i Series Molded Case Circuit Breaker (MCCB)

YCM6i-1000 MCCB

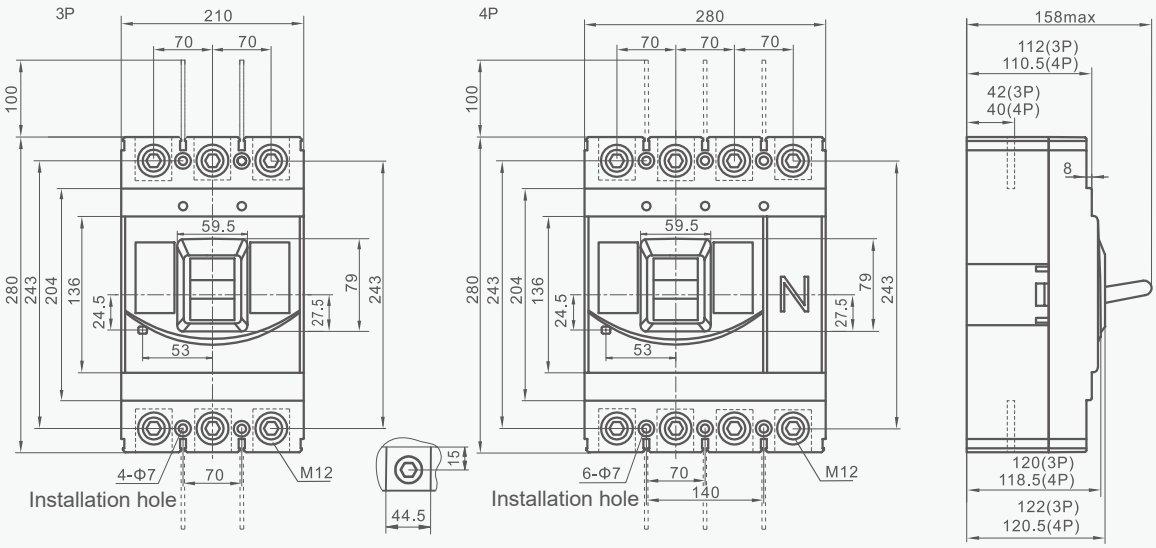

YCM6i-1000 Diagram of Large Hole Dimensions for Cabinet Door

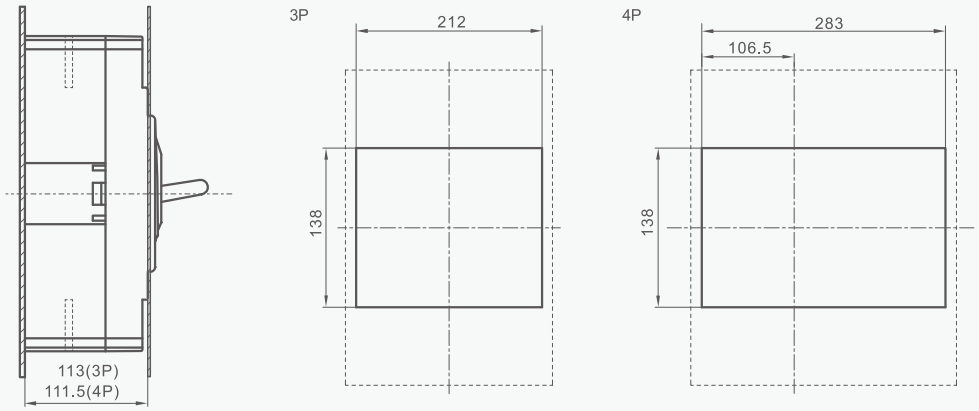

YCM6i-1000 Diagram of Small Hole Dimensions for Cabinet Door Installation

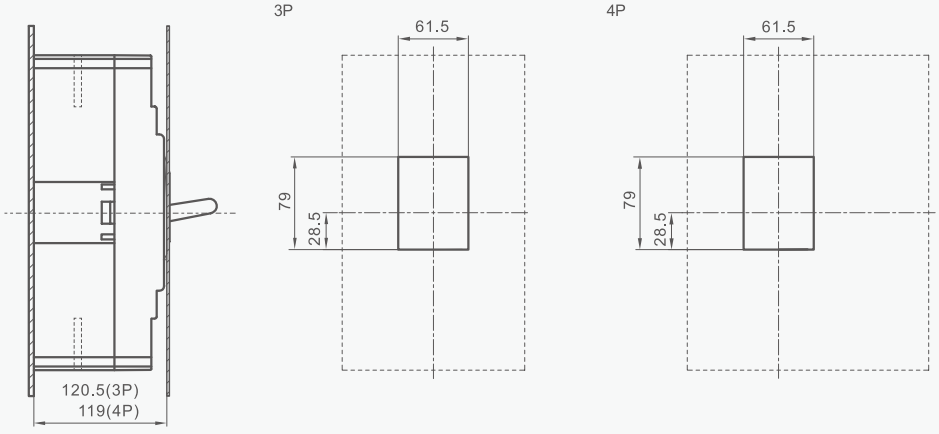

Note: It is recommended to open a large hole as shown in the above diagram. Since the outer surface of the product handle is curved,opening a small hole will affect the appearance.

B

YCM6i-1000 MCCB(Rear-panel Wiring)

X-X and Y-Y are at the center of the three-pole circuit breaker

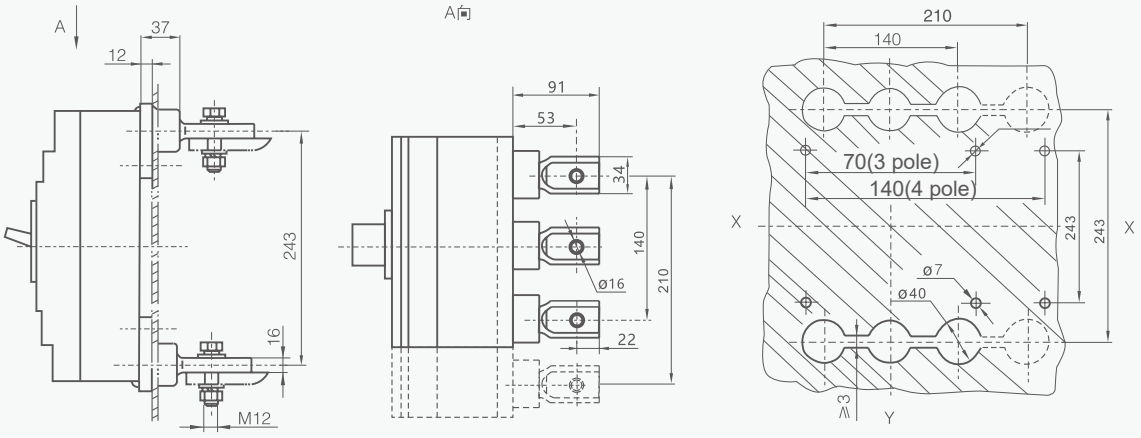

Opening dimensions of the rear-panel wiring mounting plate

YCM6i-1000 MCCB(Plug-in Rear-panel Wiring)

X-X and Y-Y are at the center of the three-pole circuit breaker

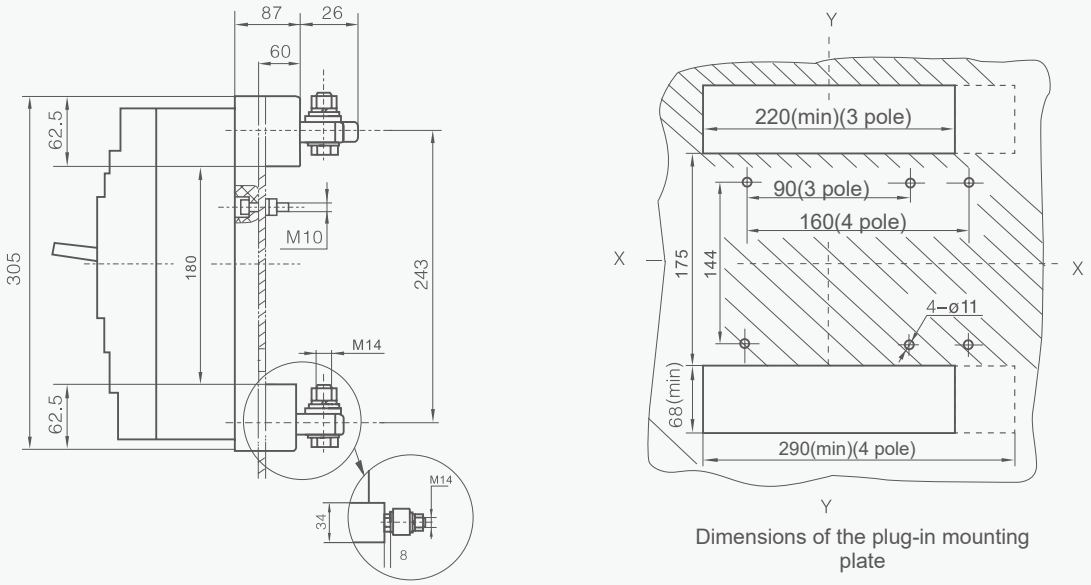

Dimensions of the plug-in mounting plate

YCM7 Series

Distribution Apparatus



- **Multi-function choices**
- **Design with small size**
- **Modular accessories for easy and convenient installation**

CNC
ELECTRIC

YCM7 Series MCCB



General

YCM7, YCM7RT, YCM7T/A, YCM7RE series circuit breaker is a new generation of breaker.

This breaker is applied for the distribution network of AC 50/60Hz, rated insulation voltage 800V, rated working current up to 800A, which is for electric energy distribution, circuit protection, protecting power supply facility from being destroyed by the fault of overloading, short circuit and undervoltage. And it is also used for protecting, over loading, short circuit and undervoltage of the motor.

This breaker has such characteristics as high short circuit interrupting capacity, shortarcing and etc., which is a ideal product for users. This breaker can be installed vertically or horizontally.

Standard:IEC60947-2

Features

1. Design miniaturized
   The miniaturization of product volume can meet the individual needs of customers on installation size.
2. Size uniformed
   Completely consistent installation size with same shell level beyond different breaking capacity(S,M) and different functions(air,leakage).
3. Reasonable parameter setting
   Circuit breaker can realize long-time delay overload inverse time, short circuit instantaneous action protection functions such as parameter setting, users can set their own protective properties required, the distribution network is used in the circuit breaker on the lower level with more reasonable.

Operating conditions

1. Altitude less than 2000m
2. Ambient medium temperature is from -5°C to +40°C (+45°C for shipping product)
3. Humidity resistance
4. Bacteria resistance
5. Nuelear radiation resistance
6. Max lean degree is 22.5 degree.
7. Can operate normally when it comes to vibration of ship.
8. Can operate normally when it comes to earthquake(4g).
9. The medium should be no risk of blasting and can't erode the metal and damage insulating gas as well as conductive dust.
10. Work in the places where is no rain and snow.

YCM7 Series MCCB

Overview

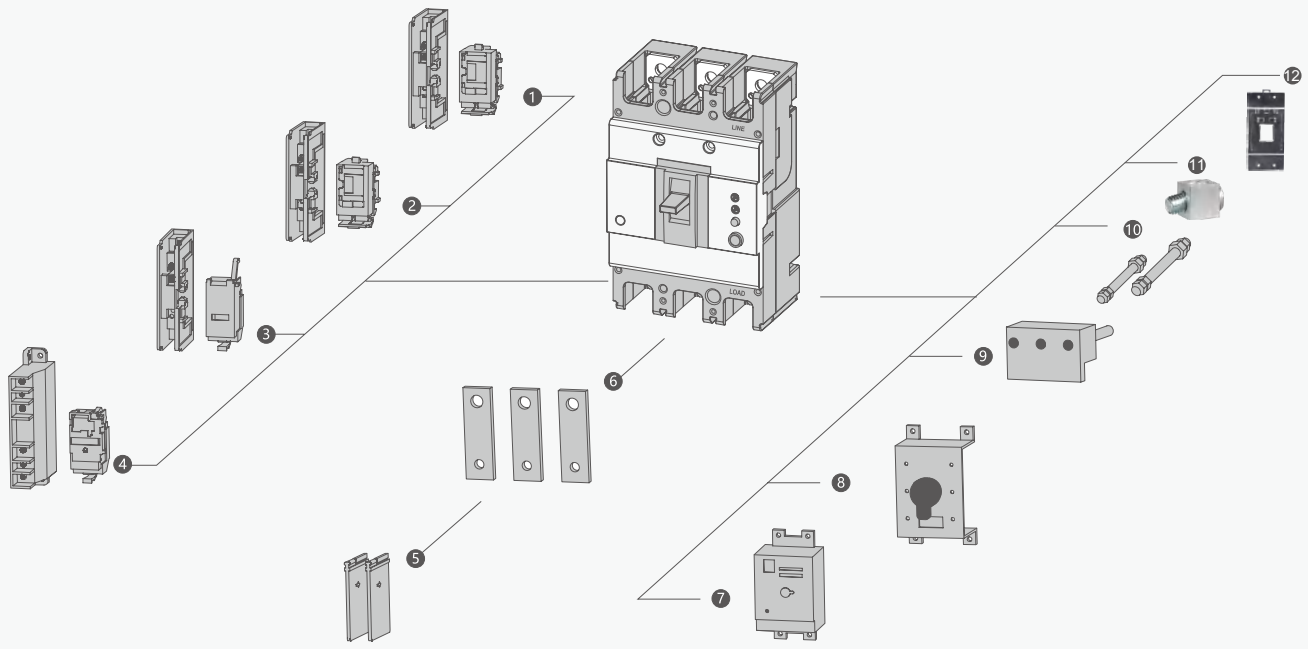

1. Auxiliary contact
2. Alarm contact
3. Shunt release
4. Undervoltage release
5. Interphase barrier
6. Front connection plate
7. Motor driven operation mechanism
8. Extended manual operation handle
9. Plug in rear connection
10. Rear connection plate
11. Connecting terminal
12. DIN Rail Adapter(125/160/250A)

YCM7 Series MCCB

Curve

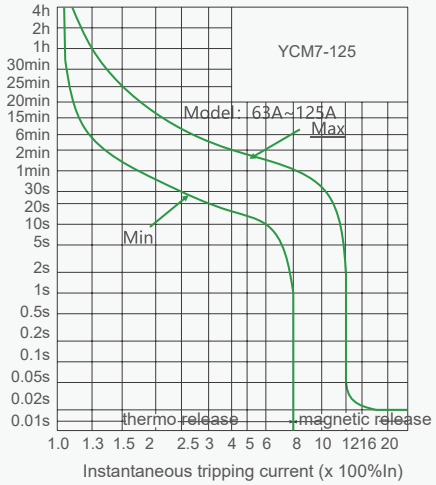

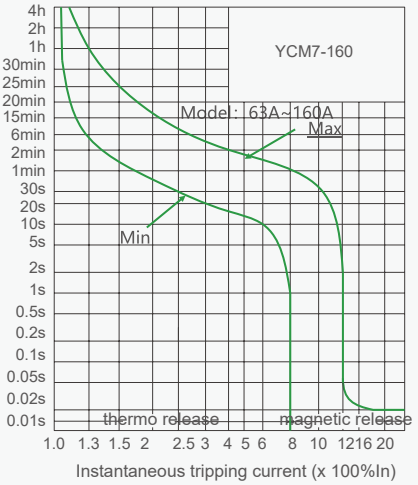

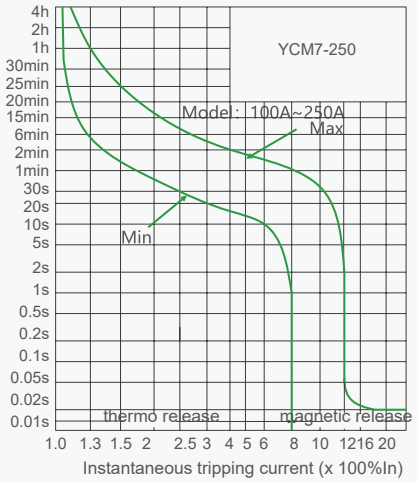

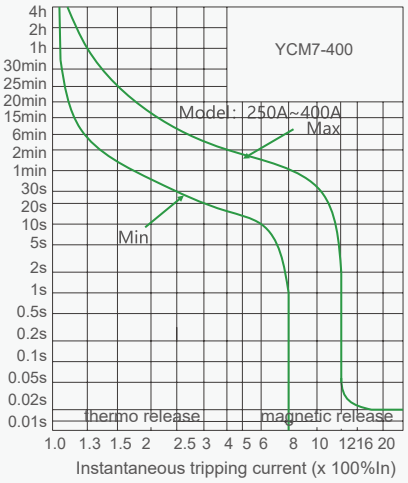

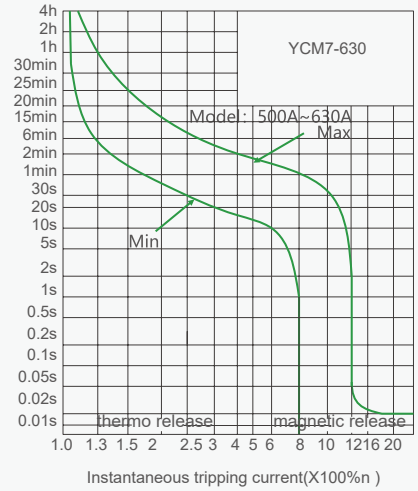

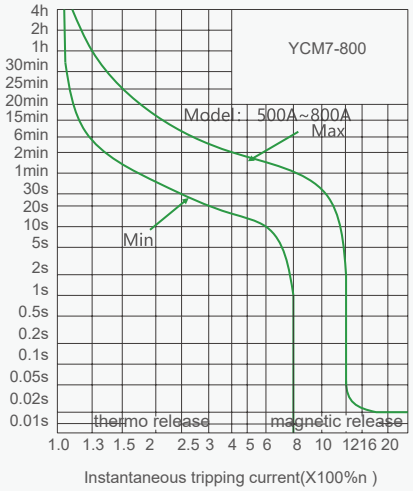

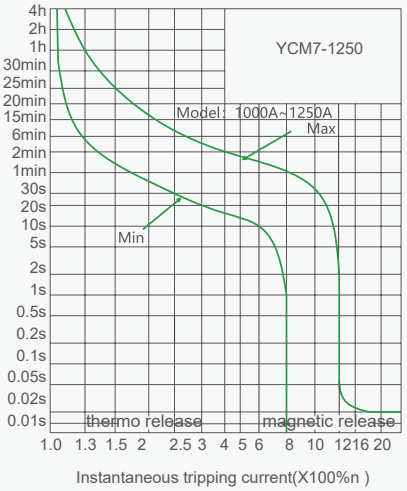

YCM7 Series MCCB

Type designation

YCM7 - 125 S P / 4 300 2 A 125A Q1 D5 Q 2

Type	Frame Inm	Breaking capacity Icu/Ics(kA)	Operation	Poles
YCM7 -	125	S	P	4
MCCB	125, 160, 250,400,630,800	S / H 125: 15/8 / - 160: 25/18 / - 250: 25/18 / - 400: 35/25 / 50/35 630: - / 50/35 800: - / 50/35 1250: - / 50/50	P: Motor-driven Z: Rotory handle W: Directly	3: 3P 4: 4P

Tripping mode and inner accessory	Application	Option for 4P MCCB	Rated current(A)
300	2	A	125A
First figure means tripping unit way 2: Only with magnetic release 3: Thermal release+,magnetic release body Remark: The last two figures means accessory code (see accessories list)	1. Power distribution 2. Motor-protection	A: N pole without protection, N pole is always ON B: N pole without protection, N pole makes with the other three poles	125: 63,80,100,125 160: 63, 80, 100, 125, 140, 160 250: 100, 125, 140, 160, 180, 200, 225, 250 400: 250, 315, 350, 400 630: 500, 630 800: 500, 630, 700, 800 1250: 800,1000,1250

Accessory voltage	Motor-driven operation voltage	Connection	With the connection plate or not
Q1	D1	Q	2
UVT Q1: AC220V Q2: AC240V Q3: AC380V Q4: AC415V Shunt F1: AC220V F2: AC380V F3: DC110V F4: DC24V	DC3 D5:AC220V D6:AC110V D7:DC220V D8:DC110V D9:AC110~240V D10: DC100~220V	Q: Front H: Rear C: Plug-in	1: not 2: yes

B

Inner accessories

Model		YCM7-125	YCM7-160	YCM7-250	YCM7-400/630	YCM7-800	YCM7-1250
No. of poles		3,4	3,4	3,4	3,4	3,4	3,4
Code	Accessory name						
208, 308	Alarm contact(SD)						
210, 310	Shunt release(MX)						
220, 320	Auxiliary contact(OF)						
230, 330	Under-voltage release(MN)						
240, 340	Shunt auxiliary contact(MX+MN)						
260, 360	Two groups auxiliary contacts(2OF)						
270, 370	Auxiliary contact UVT(OF+MN)						
218, 318	Shunt alarm contact(MX+SD)						
228, 328	Auxiliary alarm contact(OF+SD)						
238, 338	UVT alarm contact(MN+SD)						
248, 348	Shunt auxiliary alarm contact(MX+OF+SD)						
268, 368	Two groups aux alarm contact(2OF+SD)						
278, 378	Aux contact UVT alarm contact(OF+MN+SD)						
280, 380	Two groups aux contact and shunt(2OF+MX)						

→ Accessories connecting wire

● Alarm switch ○ Auxiliary switch □ Shunt release ■ Undervoltage release(UVT)

Remark: Right auxiliary, contact, left shunt, left UVT as options

YCM7 Series MCCB

Technical data

Type		YCM7-125S	YCM7-160S	YCM7-250S
Frame(A)		125	160	250
Number of poles		3,4	3,4	3,4
Products		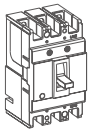	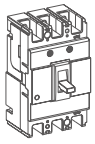	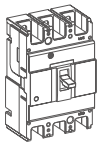
Rated current In (A)		63, 80, 100, 125	63, 80, 100, 125, 140, 160	100, 125, 140, 160, 180, 200, 225, 250
Rated voltage Ue(V)		AC400V	AC400V	AC400V
Rated insulation voltage Ui(V)		AC800V	AC800V	AC800V
Short Circuit Breaking Capacity (kA) Icu/Ics	AC400V	15/8	25/18	25/18
	AC690V	-/-	-/-	-/-
Operating life(cycle)	Electrical life	600	3000	3000
	Mechanical life	9000	7000	7000
Motor-driven operation		•	•	•
External drive handle		•	•	•
Automatic release		Thermo-magnetic	Thermo-magnetic	Thermo-magnetic

Type		YCM7-400S/M		YCM7-630M	YCM7-800M	YCM7-1250M
Frame(A)		400		630	800	1250
Number of poles		3,4		3,4	3,4	3,4
Products		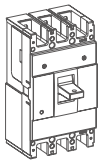		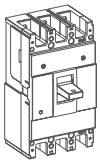	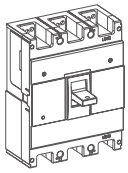	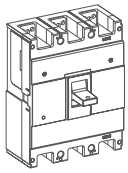
Rated current In (A)		250, 315, 350, 400		500, 630	500, 630, 700, 800	800,1000,1250
Rated voltage Ue(V)		AC400V/AC690V		AC400V/AC690V	AC400V/AC690V	AC400V/AC690V
Rated insulation voltage Ui(V)		AC800V		AC800V	AC800V	AC800V
Short Circuit Breaking Capacity (kA) Icu/Ics	AC400V	S:35/25	M:50/35	50/35	50/35	50/50
	AC690V	S:8/4	S:10/7.5	10/7.5	15/10	15/10
Operating life(cycle)	Electrical life	1000		1000	500	500
	Mechanical life	4000		4000	2500	2500
Motor-driven operation		•		•	•	•
External drive handle		•		•	•	•
Automatic release		Thermo-magnetic		Thermo-magnetic	Thermo-magnetic	Thermo-magnetic

• Means accessory as option

B

Thermo-magnetic release

1. The circuit breaker (for power distribution) has reverse time breaking characteristics of overcurrent release in all pole states and is energized simultaneously at room temperature 40°C.

Test current	Current time	Conventional time		Initial status
		In≤63	In<63	
Conventional non-trip current	1.05	1h	2h	Cold status
Conventional trip current	1.30	<1h	<2h	Hot status

2. When ambient temperature is +40'c for electric motor protection breaker, power on for every pole, inverse time limit characteristic of no temperature compensation is in the following sheet.

Test current	Current time	Conventional time	Initial status
		In≤800	
Conventional non-trip current	1.0	2h	Cold status
Conventional trip current	1.2	<2h	Hot status

3. Action property of the short-circuit release of the breaker
   - ♦ Instant trip (for power distribution)I=10In
   - ♦ Instant trip (for motor protection)I=12In
   - ♦ Current setting accuracy ±20%

Overall and mounting dimensions(mm)

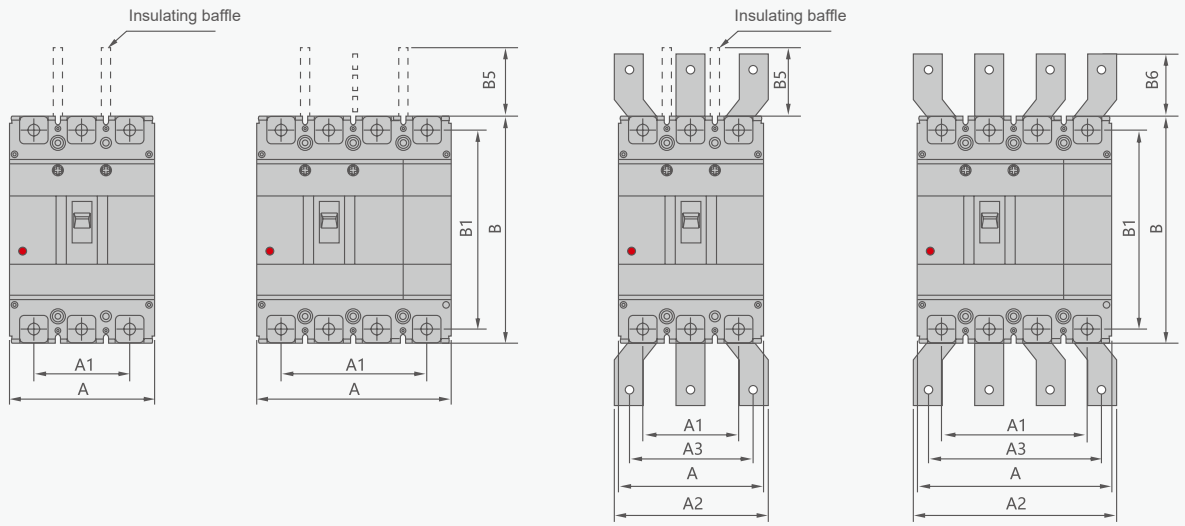

YCM7 Series MCCB

Overall and mounting dimensions(mm)

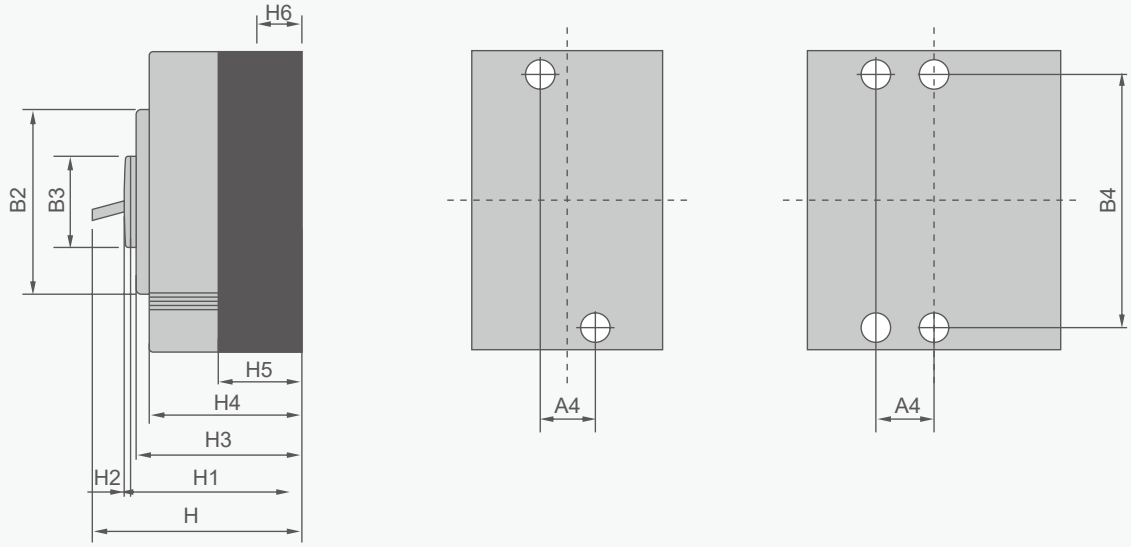

Model case Circuit breaker	Overall dimensions																						Installing dimensions		Bolt
	A		A1		A2		A3		B	B1	B2	B3	B5	B6	H	H1	H2	H3	H4	H5	H6		A4	B4	
	3P	4P	3P	4P	3P	4P	3P	4P																	
YCM7-125S	75	100	50	75	-	-	-	-	130	114	85	50	50	-	72	4	68	61	41	24	41		25	111	M8/M6
YCM7-160S	90	120	60	90	-	-	-	-	155	134	103	50	50	-	72	4	68	61	41	24	41		30	132	M8
YCM7-250S	105	140	70	105	-	-	-	-	165	144	103	50	100	-	72	4	68	61	46	24	46		35	126	M8
YCM7-400S	140	185	88	132	140	196	112	168	257	230	179	90	110	43	107	5	105	97	64	36	64		44	194	M10
YCM7-400M	140	185	88	132	140	196	112	168	257	230	179	90	110	43	107	5	105	97	64	36	64		44	194	M10
YCM7-630M	140	185	88	132	140	196	112	168	257	230	179	90	110	42	107	5	105	97	64	36	64		44	194	M10
YCM7-800M	210	280	140	210	180	250	140	210	275	243	192	90	110	87	107	5	104	97	65	24	65		70	242.5	M12

YCM7-1250M

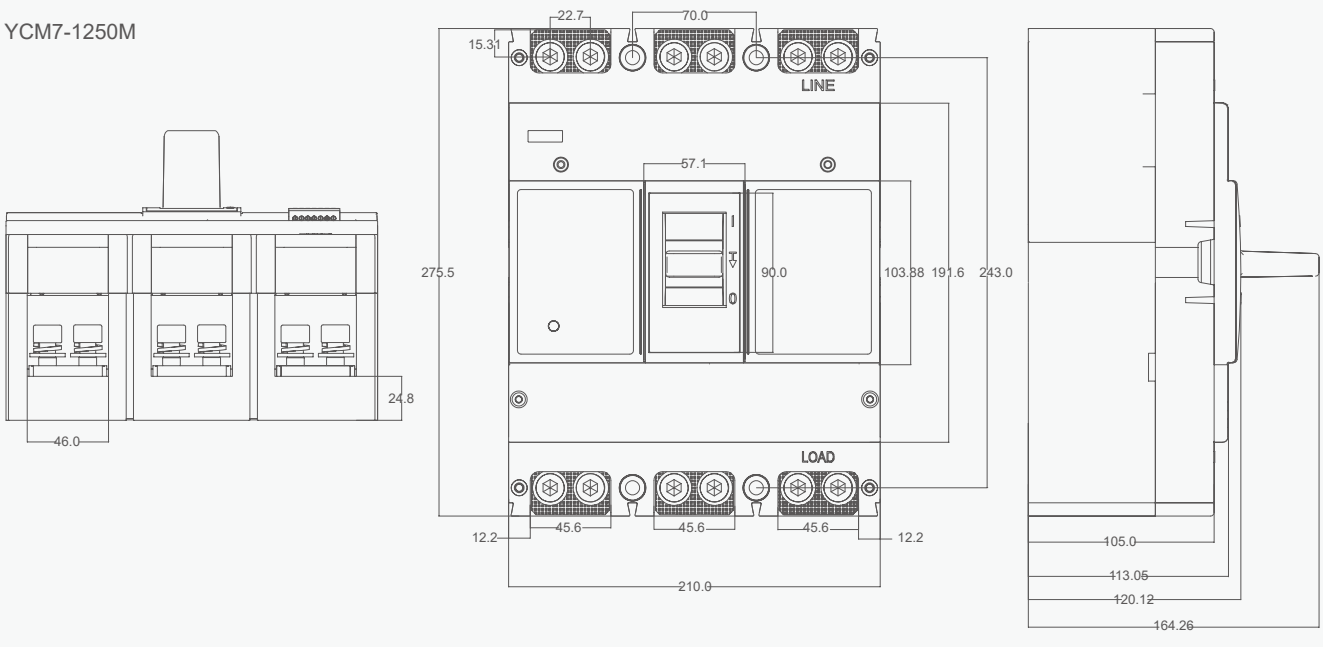

YCM7RE Electronic Adjustable MCCB



General

YCM7RE Series Electronic circuit breaker is suitable for ac 50/60 Hz, rated voltage 690V, rated working current 800A, low voltage power grid.

Operating conditions

1. Altitude less than 2000m.
2. Ambient medium temperature is from -5°C to +40°C (+45°C for shipping product).
3. Humidity resistance.
4. Bacteria resistance.
5. Nuelear radiation resistance.
6. Max lean degree is 22.5 degree.
7. Can operate normally when it comes to vibration of ship.
8. Can operate normally when it comes to earthquake(4g).
9. The medium should be no risk of blasting and can't erode the metal and damage insulating gas as well as conductive dust.
10. Work in the places where is no rain and snow.



Features

1. Above MCCB can put accessories such as, UVT, Shunt, Aux, Alarm contact, Motordriven operation, Mechanism, Rotary handle.
2. Functions available as over-load long-time delay, short-circuit time-delay,instant protection.
3. Earth-fault protection, thermal analog Pre-alarm, indication, over-current, indication operational current.

Curve

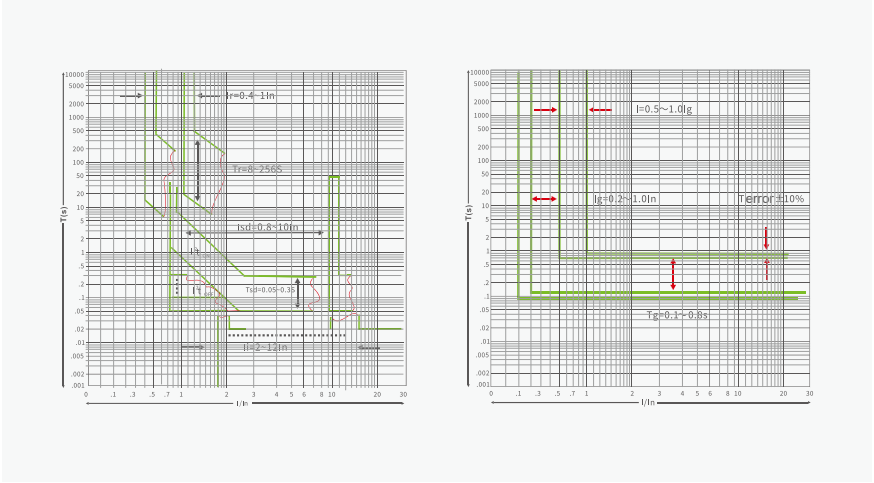

YCM7RE Electronic Adjustable MCCB

Type designation

YCM7 RE - 160 P/3 300 2 A 160A

Type	The adjustable type		Frame Inm
YCM7	RE	-	160
MCCB	RE: Electronic adjustable		Inm=160 Inm=250 Inm=400 Inm=630 Inm=800

Operation	Poles	Tripping mode and inner accessory
P	3	□00
P: Motor-driven Z: Rotation handle W: Direct	RE: Electronic adjustable	The intelligent tripping device Remark: The last two figures means accessory code (see accessories list)

Application	Option for 4P MCCB
2	A
P: Motor-driven Z: Rotation handle W: Direct	A: N pole without protection, N pole is always ON B: N pole without protection, N pole makes with the other three poles Remark: If the customer has no specific requirements, the quadrupole product will be the default for the B class

Function

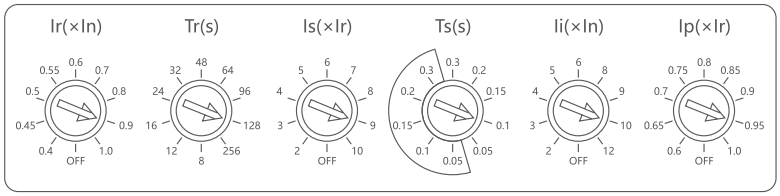

Notice:

1. Ir: Adjustable setting value of over-load protection, it could be adjusted as per customer's requirements;
2. Tr: Adjustable setting value of long time-delay operated time Tr±20%, tripping time at the status of 1.5Ir can be set as per customer's requirements;
3. Is: Adjustable setting value of short time-delay current;
4. Ts: Adjustable setting value of short time-delay operated time, it is divided into two types: fixed time limit Ts (0.05s, 0.1s, 0.15s, 0.2s, 0.3s) and reverse time limit Ts (0.05s, 0.1s, 0.15s, 0.2s, 0.3s).
5. Ii: Adjustable setting value of instant current;
6. Ip: Adjustable setting value of over-load alarm current.

YCM7RE Electronic Adjustable MCCB

Inner accessories of YCM7RE 3P

Model		YCM7RE-160	YCM7RE-250	YCM7RE-400	YCM7RE-630	YCM7RE-800
No. of poles		3	3	3	3	3
Code	Accessory name					
308	Alarm contact(SD)					
310	Shunt release(MX)					
320	Auxiliary contact(OF)					
330	Under-voltage release(MN)					
340	Shunt auxiliary contact(MX+MN)					
360	Two groups auxiliary contacts(2OF)					
370	Auxiliary contact UVT(OF+MN)					
318	Shunt alarm contact(MX+SD)					
328	Auxiliary alarm contact(OF+SD)					
338	UVT alarm contact(MN+SD)					
348	Shunt auxiliary alarm contact(MX+OF+SD)					
368	Two groups aux alarm contact(2OF+SD)					
378	Aux contact UVT alarm contact(OF+MN+SD)					
380	Two groups aux contact and shunt(2OF+MX)					

YCM7RE Electronic Adjustable MCCB

Inner accessories of YCM7RE 4P

Model		YCM7RE-160	YCM7RE-250	YCM7RE-400	YCM7RE-630	YCM7RE-800
No. of poles		4	4	4	4	4
Code	Accessory name					
308	Alarm contact(SD)					
310	Shunt release(MX)					
320	Auxiliary contact(OF)					
330	Under-voltage release(MN)					
340	Shunt auxiliary contact(MX+MN)					
360	Two groups auxiliary contacts(2OF)					
370	Auxiliary contact UVT(OF+MN)					
318	Shunt alarm contact(MX+SD)					
328	Auxiliary alarm contact(OF+SD)					
338	UVT alarm contact(MN+SD)					
348	Shunt auxiliary alarm contact(MX+OF+SD)					
368	Two groups aux alarm contact(2OF+SD)					
378	Aux contact UVT alarm contact(OF+MN+SD)					
380	Two groups aux contact and shunt(2OF+MX)					

→ Accessories connecting wire

● Alarm switch ○ Auxiliary switch □ Shunt release ■ Undervoltage release(UVT)

Remark: Right auxiliary, contact, left shunt, left UVT as options

YCM7RE Electronic Adjustable MCCB

Technical data

Type		YCM7RE-160M	YCM7RE-250M	YCM7RE-400M/630M	YCM7RE-800M
Frame(A)		160	250	400 630	800
Number of poles		3,4	3,4	3,4	3,4
Products		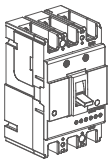	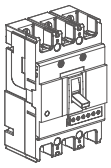	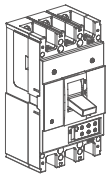	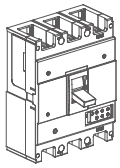
Rated current In (A)		16-32, 40-100,64-160	100-250	160-400, 252-630	252-630,320-800
Rated voltage Ue(V)		AC400/690V	AC400/690V	AC400/690V	AC400/690V
Rated insulation voltage Ui(V)		AC800V	AC800V	AC800V	AC800V
Short Circuit Breaking Capacity (kA) Icu/Ics	AC400V	35/25	35/25	50/35	50/35
	AC690V	8/4	8/4	10/7.5	15/10
Operating cycle number	Electrical life	1500	1000	1000	1000
	Mechanical life	8500	7000	4000	1500
Motor-driven operation		•	•	•	•
External drive handle		•	•	•	•
Automatic release		Electronic type	Electronic type	Electronic type	Electronic type

• Means accessory as option

Overall and mounting dimensions(mm)

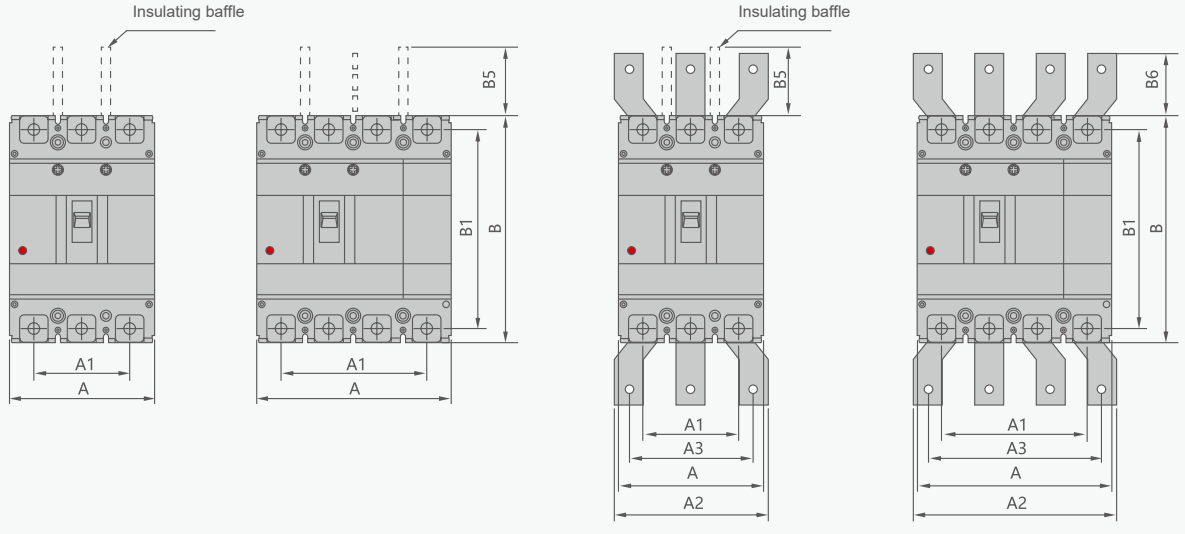

YCM7RE Electronic Adjustable MCCB

Overall and mounting dimensions(mm)

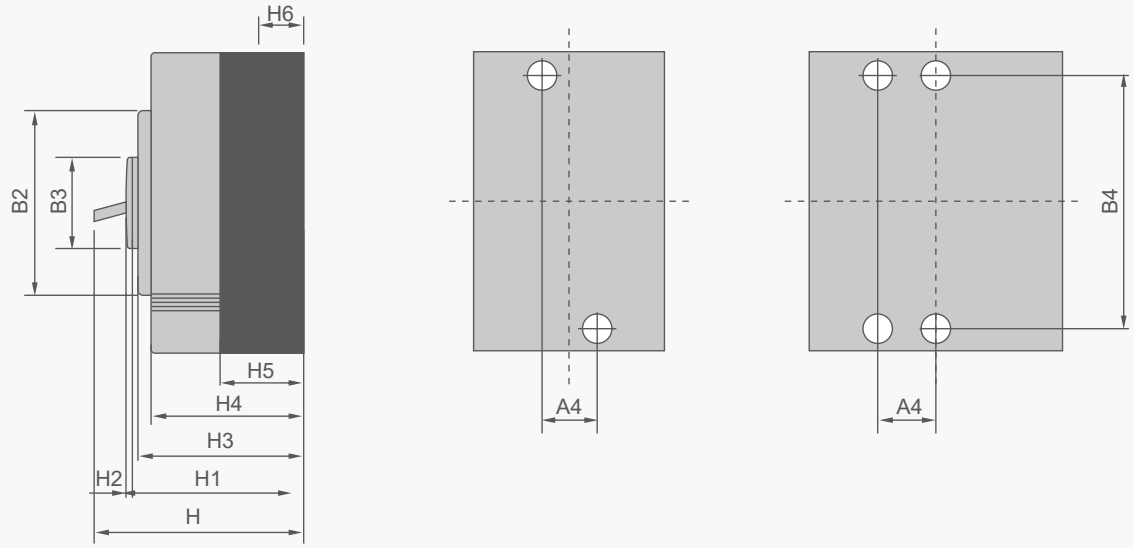

Thermal magnetic trip circuit breaker	Overall dimensions																					Installing dimensions		Bolt
	A		A1		A2		A3		B	B1	B2	B3	B5	B6	H	H1	H2	H3	H4	H5	H6	A4	B4	
	3P	4P	3P	4P	3P	4P	3P	4P																
YCM7RE-160M	90	120	60	90	-	-	-	-	155	134	102	50	50	-	109	83	4	68	61	20.7	24	30	132	M8
YCM7RE-250M	105	140	70	105	-	-	-	-	165	144	102	50	100	-	120	91	4	68	61	45	24	35	126	M8
YCM7RE-400M	140	185	88	132	140	196	112	168	257	230	179	90	110	42	155	107	5	105	97	45	36	44	194	M10
YCM7RE-630M	140	185	88	132	140	196	112	168	257	230	179	90	110	42	155	107	5	105	97	45	36	44	194	M10
YCM7RE-800M	210	280	140	210	180	250	140	210	175	243	192	90	110	87	155	107	5	104	97	15	24	70	243	2xM8

YCM7T/A, RT Thermal Magnetic Adjustable MCCB

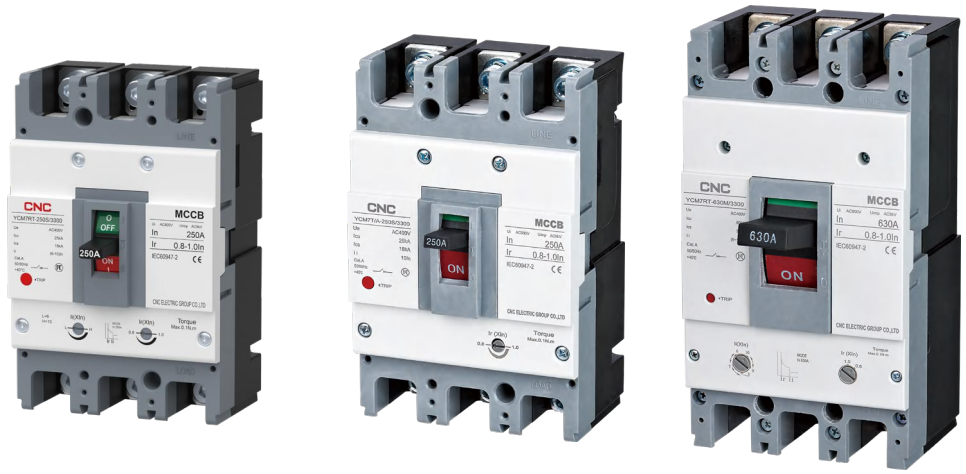

Type designation

YCM7	RT	-	160	M	P	/	3	300	2	A	160A	Q1	D5	Q	2

Type	The adjustable type		Frame Inm	Breaking capacity Icu/Ics(kA)			Operation	Poles
YCM7	RT	-	160	M			Z	3
MCCB	RT:Thermal and Magnetic adjust type T/A:Only thermal adjust		160, 250,400, 630,800	160 250 400 630 800	S 25/18 25/18 35/25 - -	M - - - 50/35 50/35 50/35	P: Motor-driven Z: Rotory handle W: Directly	2: 2P 3: 3P 4: 4P

Tripping mode and inner accessory	Application	Option for 4P MCCB	Rated current(A)	
300	2	A	160	
First figure means tripping unit way 2: Only with magnetic release 3: Thermal release+,magnetic release body Remark: The last two figures means accessory code (see accessories list)	1. Power distribution 2. Motor-protection	A: N pole without protection, N pole is always ON B: N pole without protection, N pole makes with the other three poles	160 250 400 630 800	50-63, 63-80, 80-100,100-125, 125-160 100-125, 125-160,160-200, 200-250 200-250, 250-320, 320-400 400-500, 500-630 500-630, 630-800

Accessory voltage		Motor-driven operation voltage	Connection	With the connection plate or not
Q1		D	Q	2
UVT Q1: AC220V Q2: AC240V Q3: AC380V Q4: AC415V	Shunt F1: AC220V F2: AC380V F3: DC110V F4: DC24V	DC3 D5:AC220V D6:AC110V D7:DC220V D8:DC110V D9:AC110~240V D10: DC100~220V	Q: Front H: Rear C: Plug-in	1: not 2: yes

YCM7T/A, RT Thermal Magnetic Adjustable MCCB

Inner accessories

Model		YCM7T/A-160 YCM7RT-160		YCM7T/A-250 YCM7RT-250		YCM7T/A-400/630 YCM7RT-400/630	YCM7T/A-800 YCM7RT-800
Breaking capacity		S		S		S,M	S,M
No. of poles		3	4	3	4	3,4	3,4
Code	Accessory name						
208, 308	Alarm contact(SD)	●	●	●	●	●	●
210, 310	Shunt release(MX)	□	□	□	□	□	□
220, 320	Auxiliary contact(OF)	○	○	○	○	○	○
230, 330	Under-voltage release(MN)	■		■		■	■
240, 340	Shunt auxiliary contact(MX+MN)	○ □	□ ○	○ □	□ ○	○ □	○ □
260, 360	Two groups auxiliary contacts(2OF)	○ ○	○ ○	○ ○	○ ○	○ ○	○ ○
270, 370	Auxiliary contact UVT(OF+MN)	○ ■		○ ■		○ ■	○ ■
218, 318	Shunt alarm contact(MX+SD)	● □		● □		● □	● □
228, 328	Auxiliary alarm contact(OF+SD)	● ○	● ○	● ○	● ○	● ○	● ○
238, 338	UVT alarm contact(MN+SD)	● ■		● ■		● ■	● ■
248, 348	Shunt auxiliary alarm contact(MX+OF+SD)	● ○ □		● ○ □		● ○ □	● ○ □
268, 368	Two groups aux alarm contact(2OF+SD)	● ○ ○	● ○ ○	● ○ ○	● ○ ○	● ○ ○	● ○ ○
278, 378	Aux contact UVT alarm contact(OF+MN+SD)	● ○ ■		● ○ ■		● ○ ■	● ○ ■
280, 380	Two groups aux contact and shunt(2OF+MX)	○ ○ □		○ ○ □		○ □ ○	○ □ ○

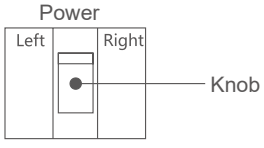

● Alarm switch ○ Auxiliary switch □ Shunt release ■ Undervoltage release(UVT)

Remark: Right auxiliary, contact, left shunt, left UVT as options

→ Accessories connecting wire

YCM7T/A, RT Thermal Magnetic Adjustable MCCB

Technical data

Type		YCM7T/A-160S YCM7RT-160S	YCM7T/A-250S YCM7RT-250S	YCM7T/A-400S YCM7RT-400S
Frame(A)		160	250	400
Number of poles		3,4	3,4	3,4
Products		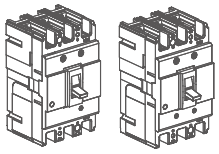	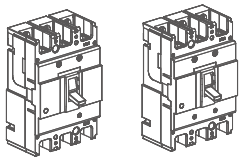	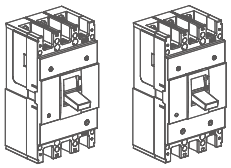
Rated current In (A)		50-63,63-80,80-100, 100-125,125-160	100-125,125-160, 160-200,200-250,	200-250,250-320, 320-400
Rated voltage Ue(V)		AC400	AC400	AC400/690V
Rated insulation voltage Ui(V)		AC800V	AC800V	AC800V
Short Circuit Breaking Capacity (kA) Icu/Ics	AC400V	25/18	25/18	35/25
	AC690V	-	-	8/4
Operation life (cycle)	ON	3000	3000	2000
	OFF	7000	7000	4000
Motor-driven operation		•	•	•
External drive handle		•	•	•
Automatic release		Thermo-magnetic	Thermo-magnetic	Thermo-magnetic

Type		YCM7T/A-400M YCM7RT-400M	YCM7T/A-630M YCM7RT-630M	YCM7T/A-800M YCM7RT-800M
Frame(A)		400	630	800
Number of poles		3,4	3,4	3,4
Products		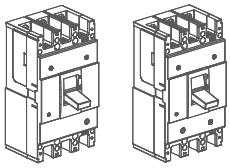	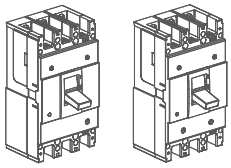	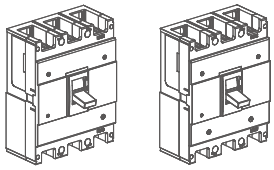
Rated current In (A)		200-250,250-320,320-400	400-500,500-630	500-630,630-800
Rated voltage Ue(V)		AC400/690V	AC400/690V	AC400/690V
Rated insulation voltage Ui(V)		AC690V	AC690V	AC690V
Short Circuit Breaking Capacity (kA) Icu/Ics	AC400V	50/35	50/35	50/35
	AC690V	10/7.5	10/7.5	15/10
Operation life (cycle)	ON	2000	2000	1500
	OFF	4000	4000	4000
Motor-driven operation		•	•	•
External drive handle		•	•	•
Automatic release		Thermo-magnetic	Thermo-magnetic	Thermo-magnetic

YCM7T/A, RT Thermal Magnetic Adjustable MCCB

Overall and mounting dimensions(mm)

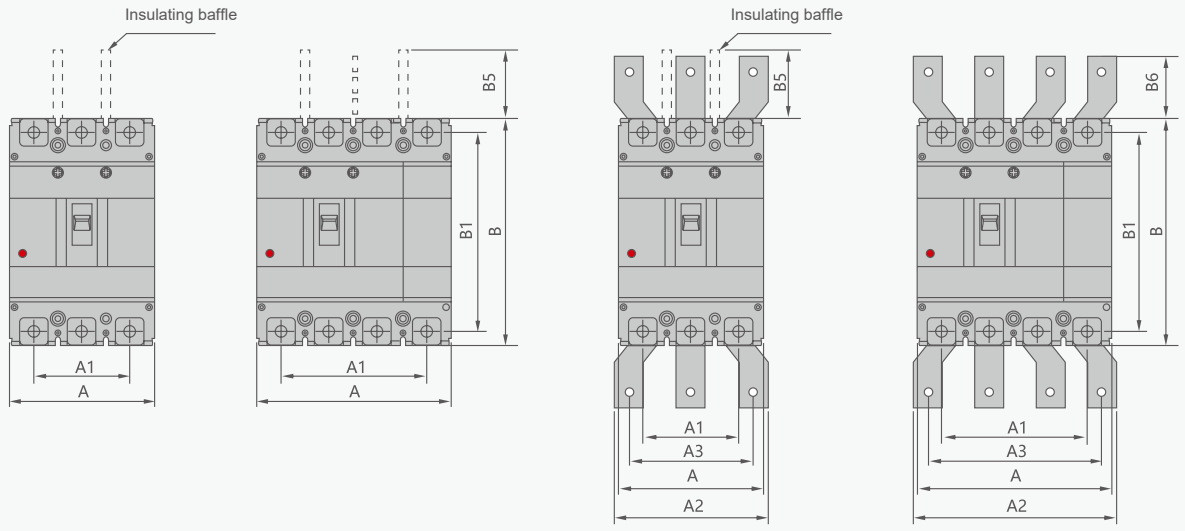

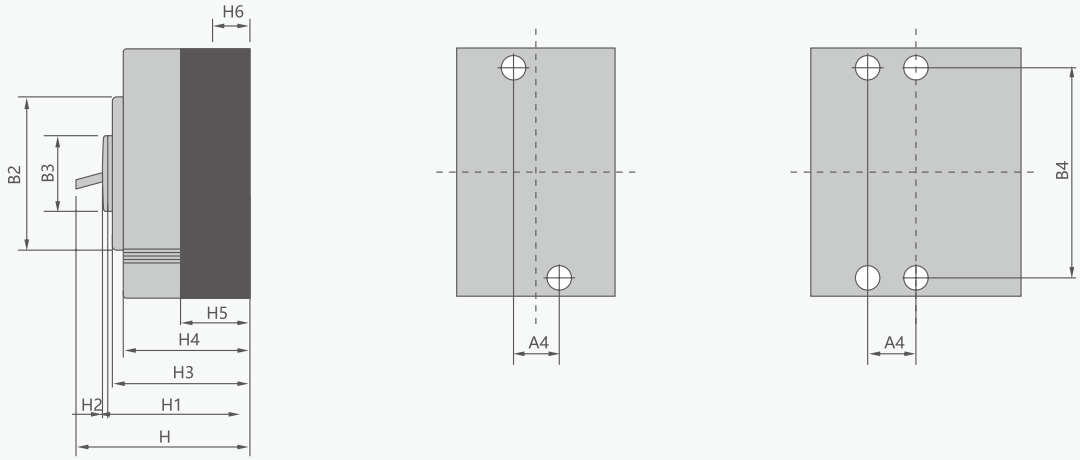

Thermal magnetic trip circuit breaker	Thermal adjustable circuit breaker	Overall dimensions																					Installing dimensions		Bolt
		A		A1		A2		A3		B	B1	B2	B3	B5	B6	H	H1	H2	H3	H4	H5	H6	A4	B4	
		3P	4P	3P	4P	3P	4P	3P	4P																
YCM7RT-160S	YCM7T/A-160S	90	120	60	90	-	-	-	-	155	134	103	50	50	-	94	72	4	68	61	47	24	30	132	M8
YCM7RT-250S	YCM7T/A-250S	105	140	70	105	-	-	-	-	165	144	103	50	100	-	96	72	4	68	61	46	24	35	126	M8
YCM7RT-400S	YCM7T/A-400S	140	185	88	132	140	196	112	168	257	230	179	90	110	42	155	107	5	105	97	64	36	44	194	M10
YCM7RT-400M	YCM7T/A-400M	140	185	88	132	140	196	112	168	257	230	179	90	110	42	155	107	5	105	97	64	36	44	194	M10
YCM7RT-630M	YCM7T/A-630M	140	185	88	132	140	196	112	168	257	230	179	90	110	42	155	107	5	105	97	64	36	44	194	M10
YCM7RT-800M	YCM7T/A-800M	210	280	140	210	180	250	140	210	175	243	192	90	110	87	155	107	5	104	97	65	24	70	242.5	M12

YCM7YV MCCB



General

YCM7YV series electronic plastic case circuit breaker (hereinafter referred to as: circuit breaker) is suitable for low-voltage power grids with AC 50/60 Hz, rated insulation voltage 800V, rated operating voltage 400V and below, and rated operating current up to 800A. The circuit breaker has overload long-delay inverse time limit, short-circuit short-delay inverse time limit, short-circuit short-delay fixed time limit, short-circuit instantaneous and under-voltage protection functions. Under normal circumstances, the circuit breaker is used for infrequent switching of circuits and infrequent starting of motors.This series of circuit breakers has isolation function, and its corresponding symbol is " "

Standard: IEC60947-2.

Operating conditions

1. Ambient air temperature

   a)The upper limit value does not exceed +40°C;

   b)The lower limit value does not exceed -5°C;

   c)The average value over 24 hours does not exceed +35°C;

2. Altitude

   The altitude of the installation site does not exceed 2000m.

3. Atmospheric conditions

   The relative humidity of the atmosphere does not exceed 50% when the ambient maximum temperature is +40°C; it can have higher relative humidity at lower temperatures; when the monthly average minimum temperature of the wettest month is +25°C, the monthly average maximum temperature of the month is +25°C.The relative humidity is 90%, taking into account condensation that occurs on the product surface due to temperature changes.

4. Pollution degree

   Pollution degree 3, the accessories installed in the circuit breaker have a pollution degree 2.

5. Installation category

   The main circuit of the circuit breaker shall be installation category III, and the auxiliary circuit and control circuit shall be installation category II.

6. Installation conditions.

   Circuit breakers should generally be installed vertically, usually with upward wiring, and the external magnetic field at the installation site should not exceed 5 times the geomagnetic field in any direction.

YCM7YV MCCB

Type designation

YCM7YV - 250 M P / 3 3 00 100-250A

Model	Shell frame	Breaking capacity	Number of poles	Tripping method	Accessorie	Rated current
YCM7YV -	250	M	/ 3	3	00	100-250A
YCM7YV	160 250 400 630	M:Standard breaking	3:3P	3:Electronic	00:No accessories	16-32A 40-100A 64-160A 100-250A 160-400A 252-630A

Technical data

Type		YCM7YV-160M	YCM7YV-250M	YCM7YV-400M	YCM7YV-630M
Frame(A)		160	250	400	630
Number of poles		3	3	3	3
Products		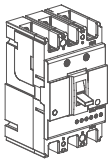	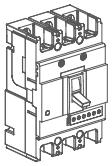	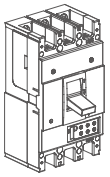	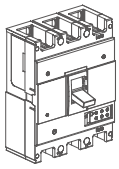
Rated current adjustable range In(A)		16-32,40-100,64-160	100-250	160-400	160-400,252-630
Rated voltage Ue(V)		AC400/690V	AC400/690V	AC400/690V	AC400/690V
Rated insulation voltage Ui(V)		AC800V	AC800V	AC800V	AC800V
Short Circuit Breaking Capacity (kA) Icu/Ics	AC400V	35/25	35/25	50/35	50/35
	AC690V	8/4	8/4	10/7.5	10/7.5
Operation life (cycle)	ON	1500	1000	1000	1000
	OFF	8500	7000	4000	4000
Motor-driven operation		•	•	•	•
External drive handle		•	•	•	•
Automatic release		Electronic type	Electronic type	Electronic type	Electronic type

B

Function description

Specifications and functions			
Class ification	Describe		●
Display method	LCD display+LED indicator		●
Interface operation	key		●
Protection function	Current protection	Overload long delay protection function	●
		Short circuit protection Time delay protection	●
		Short circuit instantaneous protection function	●
		Overload warning function	●
	Voltage protection	Undervoltage protection work	●
		Overvoltage protection function	●
		Lack of phase protection function	●
		Power side zero break protection function	●
	Communication function	D/LT645-2007 Multifunctional metercommunication protocol Modbus-RTu	●
		Modbus-RTU communication protocol	○
		RS-485Communication hardware 1 RS-485	●
	port function	Communication auxiliary power input	○
		One DI/0 programmable control input	○
	Fault record	10 trip failure storage	●
		80 protection function logout events recorded	●
		10 gate position change events recorded	●
		10 alarm event records	●
	Time function	With year, month, day, minute and second real-time clock function	●
Measurement function	Measure electrical parameters	Voltage 0.7Ue~1.3Ue,0.5%	●
		Current 0.2In~1.2In,0.5%:	●
		Three-phase and total power factor 0.5~100005	●
		Three-phase and total active power, reactive power,apparent power	●
		Three-phase and total active energy, reactive energy,apparent energy	●
		Voltage harmonics and total voltage harmonic distortion	●
		Current harmonics and total current harmonic distortion	●

Note:
The symbol " " indicates that it has its function: the symbol " O"indicates that this function is optional; The symbol "-" indicates that this function is unavailable.

YCM7YV MCCB

Overall and mounting dimensions(mm)

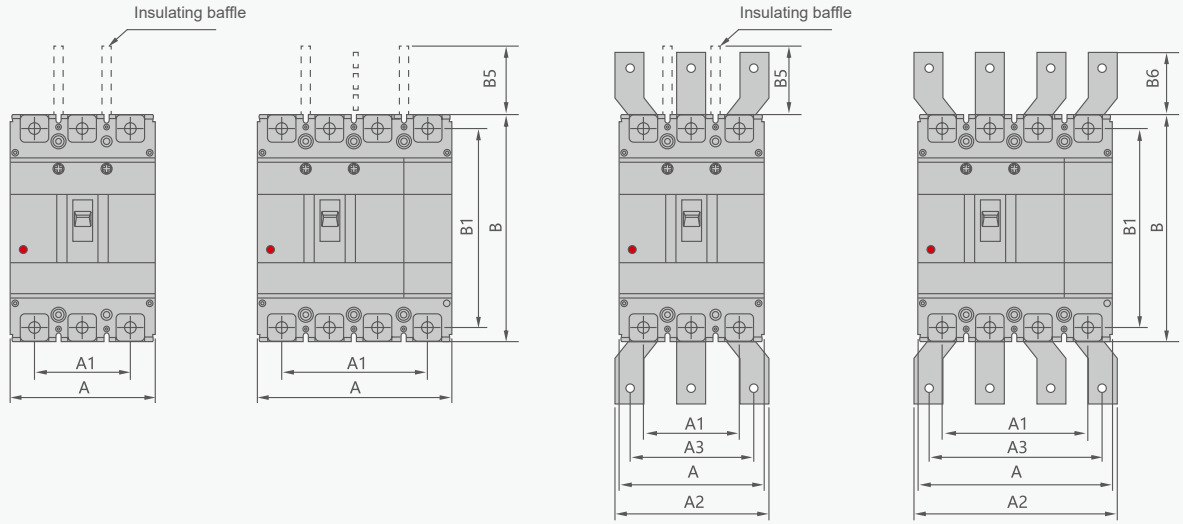

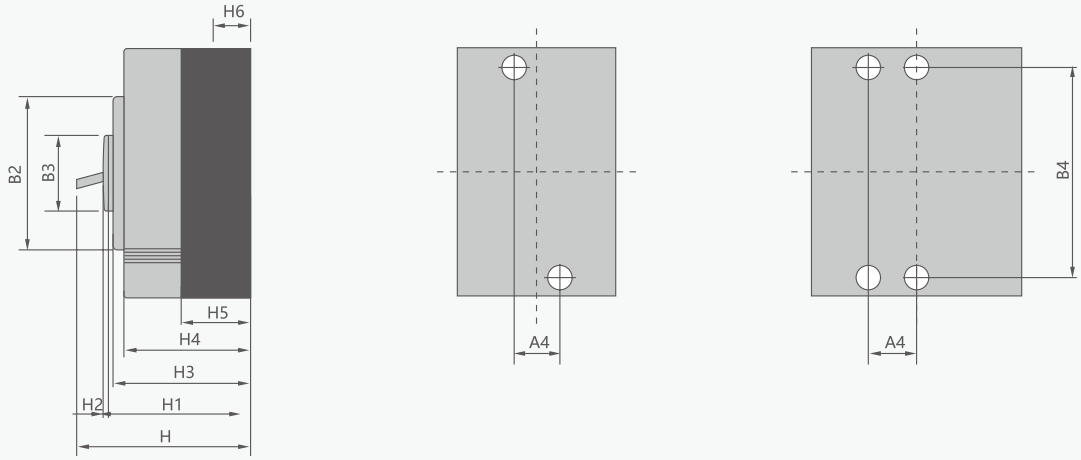

Model	Overall dimensions																					Mounting dimensions		Bolt
	A		A1		A2		A3		B	B1	B2	B3	B5	B6	H	H1	H2	H3	H4	H5	H6	A4	B4	
	3P	4P	3P	4P	3P	4P	3P	4P																
160M	105	-	70	-	-	-	-	-	165	144	104	59	110	-	120	98	2	98	84	22.5	24	35	126	M8
250M	105	-	70	-	-	-	-	-	165	144	104	59	110	-	120	98	2	98	97	22.5	24	35	126	M8
400M	140	-	88	-	140	-	112	-	257	230	179	100	110	42	155	110	3	110	97	29	30	44	194	M10
630M	140	-	88	-	140	-	112	-	257	230	179	100	110	42	155	110	3	110	97	30	32	44	194	M10
800M	210	-	140	-	180	-	140	-	257	243	192	90	110	87	155	107	5	104	97	25	25	70	243	M12

YCM7LE Series MCCB



General

The rated insulation voltage of this circuit breaker is up to 800V, suitable for distribution network circuits with AC 50/60Hz, rated working voltage up to 690V, and rated working current up to 800A. It is used to distribute electrical energy and protect lines and power equipment from losses caused by overload, short circuit, undervoltage and other faults. At the same time, it can also serve as infrequent starting and overload, short circuit, and undervoltage protection for electric motors.

This circuit breaker has the characteristics of small size, high breaking height, and short arcing, making it an ideal product for users. Circuit breakers can be installed vertically or horizontally.

Standard:IEC60947-2

Operating conditions

1. The product can operate reliably in Class III polluted environments defined by IEC/EN 60947-1 and IEC 60664-1 (industrial environments).
2. It can be used in a temperature range of -35 °C~70 °C. If the temperature is below -5 °C or above 40 °C, it must be reduced in capacity for use.
3. Installation altitude below 2000m is considered for normal operation. If it exceeds 2000m, the decrease in dielectric strength and air cooling factors must be taken into account. Please use the altitude reduction coefficient table provided in the sample for correction.
4. The product has passed environmental tests such as dry cold, dry heat, and humid heat, and can operate reliably in unconventional environments
5. The product complies with the requirements of IEC 60529/GB/T 4208 (enclosure protection level) standard. Product body: protection grade IP30 (excluding wiring terminals).

YCM7LE Series MCCB

Type designation

YCM7LE - 160 S P / 4 300 2 A 160A L1 Y1 Q1 D5 Q 2

Type	Frame Inm	Breaking capacity Icu/Ics(kA)			Operation	Poles	Tripping mode and inner accessory
YCM7LE -	160	S			P /	4	300
Earth Leakage MCCB	160, 250, 400, 630, 800	160, 250, 400, 630, 800	S 25/18 25/18 / /	H / / 35/25 35/25	P: Motor-driven Z: Rotory handle W: Directly	4: 4P	First figure means tripping unit way 2: Only with magnetic release 3: Thermal release+,magnetic release body Remark: The last two figures means accessory code (see accessories list)

Application	Option for 4P MCCB	Rated current(A)	Rated residual operating current (mA)
2	A	160A	L1
1. Power distribution 2. Motor-protection	A: N pole without protection, N pole is always ON B: N pole without protection, N pole makes with the other three poles	160 : 10, 16, 20, 32, 40, 50, 63, 80, 100, 125, 140, 160 250 : 100, 125, 140, 160, 180, 200, 225, 250 400 : 250, 315, 350, 400 630 : 250, 315, 350, 400, 500, 630 800 : 500, 630, 700, 800	Fixed type L1: 30 L2: 50 L3: 75 L4: 100 L5: 150 L7: 200 L8: 200 L9: 500 L10: 1000 Quick three adjustable L11: 30，50,100 L12: 30，100,200 L13: 30，100,500 L14: 100，300,500 L15: 100，300,500 L16: 100，300,1000

Delay fixed type	Accessory voltage	Motor-driven operation voltage	Connection	With the connection plate or not
Y1	Q1	D5	Q	2
Delay fixed type Y1: 0.1S Y2: 0.2S Y3: 0.3S Y4: 0.4S Y5: 0.5S Y6: 0.6S Y7: 0.7S Y8: 0.8S Y9: 0.9S Y10: 1.0S Y11: 1.1S Y12: 1.2S Quick three adjustable Y13: 0.45,1,2 Y14: 1,2,3	UVT Q1: AC220V Q2: AC240V Q3: AC380V Q4: AC415V Shunt F1: AC220V F2: AC380V F3: DC110V F4: DC24V	DC3 D5:AC230V D6:AC110V D7:DC220 D8:DC110 D9: AC110 ~ 240V D10:DC100~220V	Q: Front H: Rear C: Plug-in	1: not 2: yes

YCM7LE Series MCCB

Inner accessories

Model		YCM7LE-160	YCM7LE-250	YCM7LE-400/630	YCM7LE-800
Breaking capacity		S	S	S	S
No. of poles		3,4	3,4	3,4	3,4
Code	Accessory name				
208, 308	Alarm contact(SD)				
210, 310	Shunt release(MX)				
220, 320	Auxiliary contact(OF)				
230, 330	Under-voltage release(MN)				
240, 340	Shunt auxiliary contact(MX+MN)				
260, 360	Two groups auxiliary contacts(2OF)				
270, 370	Auxiliary contact UVT(OF+MN)				
218, 318	Shunt alarm contact(MX+SD)				
228, 328	Auxiliary alarm contact(OF+SD)				
238, 338	UVT alarm contact(MN+SD)				
248, 348	Shunt auxiliary alarm contact(MX+OF+SD)				
268, 368	Two groups aux alarm contact(2OF+SD)				
278, 378	Aux contact UVT alarm contact(OF+MN+SD)				
280, 380	Two groups aux contact and shunt(2OF+MX)				

→ Accessories connecting wire

● Alarm switch ○ Auxiliary switch □ Shunt release ■ Undervoltage release(UVT)

Remark: Right auxiliary, contact, left shunt, left UVT as options

YCM7LE Series MCCB

Technical data

Type		YCM7LE-160	YCM7LE-250
Frame(A)		160	250
Number of poles		4	4
Products		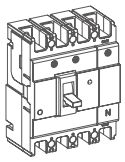	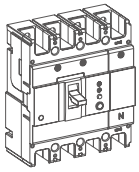
Rated current In (A)		10, 16, 20, 32, 40, 50, 63, 80, 100, 125, 160	100, 125, 140, 160, 180 ,200 ,225 ,250
Rated voltage Ue(V)		400/690	
Rated insulation voltage Ui(V)		AC800V	AC800V
Rated impulse withstand voltage Uimp(KV)		8	8
Breaking capacity		S	S
Short Circuit Breaking Capacity (kA) Icu/Ics	AC400V	25/18	25/18
	AC690V	5/3	5/3
Working with categories		A	A
Operation life(cycle)	ON	3000	3000
	OFF	7000	7000
Dimension(mm) a-b-c-ca 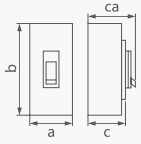	4P	120-155-70-94	140-165-70-96

YCM7LE Series MCCB

Technical data

Type		YCM7LE-400	YCM7LE-630	YCM7LE-800
Frame(A)		400	630	800
Number of poles		4	4	4
Products		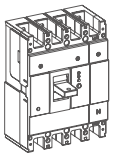	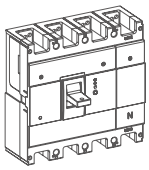	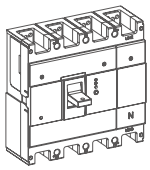
Rated current In (A)		250, 315, 350, 400	250, 315, 350, 400, 500, 630	500, 630, 700, 800
Rated voltage Ue(V)		400/690		
Rated insulation voltage Ui(V)		AC800V	AC800V	AC800V
Rated impulse withstand voltage Uimp(KV)		8	8	8
Breaking capacity		H	H	H
Short Circuit Breaking Capacity (kA) Icu/Ics	AC400V	35/25	35/25	35/25
	AC690V	8/4	8/4	8/4
Working with categories		A	A	A
Operation life(cycle)	ON	2000	2000	1500
	OFF	4000	4000	4000
Dimension(mm) a-b-c-ca 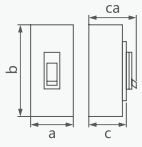	4P	185-257-105-155	185-257-105-155	280-275-105-155

Thermo-magnetic release

1. The circuit breaker (for power distribution) has reverse time breaking characteristics of overcurrent release in all pole states and is energized simultaneously at room temperature 40°C.

Test current	Current time	Conventional time		Initial status
		In≤63	In<63	
Conventional non-trip current	1.05	1h	2h	Cold status
Conventional trip current	1.30	<1h	<2h	Hot status

2. When ambient temperature is +40'c for electric motor protection breaker, power on for every pole, inverse time limit characteristic of no temperature compensation is in the following sheet.

Test current	Current time	Conventional time	Initial status
		In≤800	
Conventional non-trip current	1.0	2h	Cold status
Conventional trip current	1.2	<2h	Hot status

3. Action property of the short-circuit release of the breaker
   - ♦ Instant trip (for power distribution)I=10In
   - ♦ Instant trip (for motor protection)I=12In
   - ♦ Current setting accuracy ±20%

B

Overall and mounting dimensions(mm)

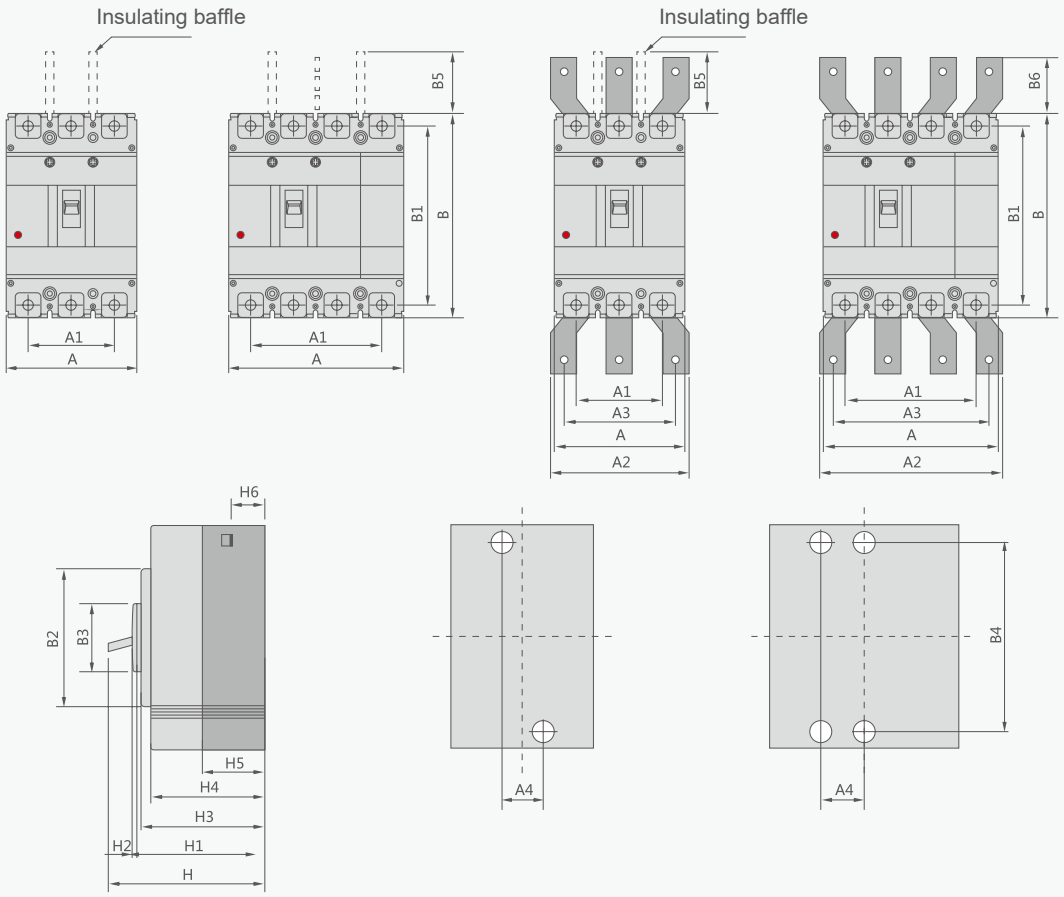

Thermal magnetic trip circuit breaker	Overall dimensions																					Installing dimensions		Bolt
	A		A1		A2		A3		B	B1	B2	B3	B5	B6	H	H1	H2	H3	H4	H5	H6	A4	B4	
	3P	4P	3P	4P	3P	4P	3P	4P																
YCM7LE-160	-	120	-	90	-	-	-	-	155	134	103	50	50	-	94	72	4	70	61	41	24	30	132	M8
YCM7LE-250	-	140	-	105	-	-	-	-	165	144	103	50	100	-	96	72	4	70	61	46	24	35	126	M8
YCM7LE-630	-	185	-	132	-	196	-	168	257	230	179	90	110	42	155	107	5	105	97	64	35	44	194	M10
YCM7LE-800	-	280	-	210	-	250	-	210	275	243	192	90	110	87	155	107	5	104	97	65	24	70	242.5	M12

YCM7 Series MCCB Accessories

Internal accessories

Internal accessories of YCM7, YCM7RT, YCM7E series include undervoltage release, shunt release and auxiliary alarm release, their main technical parameters and wiring diagram are as follows:

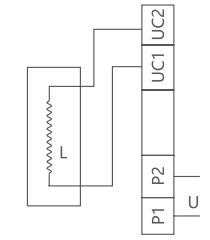

Undervoltage release	
Rated voltage of power supply	Main features
AC220, AC240 AC380, AC415	A. Undervoltage release should act when voltage drops to within 70% and 35% of the rated voltage. B. The undervoltage release should not be closed to prevent the circuit breaker from closing when the voltage is lower than 35% of the rated voltage. C. The undervoltage release should be closed to ensure reliable closing of the circuit breaker when the voltage is equal to or greater than 85% of the rated voltage.

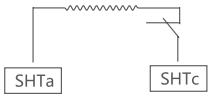

Shunt release	
Rated voltage of power supply	Main features
AC24, DC110 AC220, AC380	Shunt release can work reliably when the rated voltage value is at 70% and 110%.

Auxiliary alarm contact	
Rated voltage of power supply	Main features
Auxiliary switch 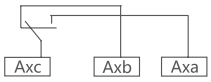 AC 125V 5A, AC 250V 3A DC 125V0.4A, DC 125V0.2A	Shunt release can work reliably when the rated voltage value is at 70% and 110%.
Alarm switch 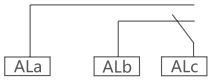 AC 125 5A, AC 250V 3A DC 125V0.4A, DC 125V 0.2A	Provide differentiated signals for the circuit breaker at "normal work" and "fault free trip" positions.
Auxiliary alarm switch 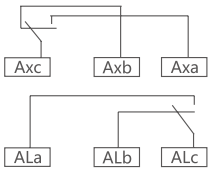 AC 125V 5A, AC 250V 3A DC 125V0.4A.DC125V0.2A	Provide differentiated signals for the circuit breaker at "close", "open" and "fault free trip" positions.

YCM7 Series MCCB Accessories

External accessories

The main technical parameters, dimensions and installation diagrams of external accessories for YCM7, YCM7RT and YCM7E series are as follows:

DC3 electric operating mechanism.

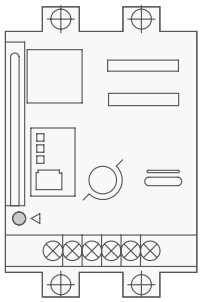

Model & Spec.		DC3-63/30	DC3-100/30	DC3-250/30	DC3-400/30	DC3-630/30
Applicable model		YCM7-125 YCM7RT-125 YCM7T/A-125	YCM7-160 YCM7RT-160 YCM7E-160 YCM7T/A-160	YCM7-250 YCM7RT-250 YCM7E-250 YCM7T/A-250	YCM7T/A-400 YCM7-400 YCM7RT-400 YCM7E-400 YCM7-630 YCM7RT-630 YCM7E-630 YCM7T/A-630	YCM7-800 YCM7RT-800 YCM7E-800 YCM7T/A-800
Outline dim.	A	25	30	35	44	70
	B	117	132	126	194	243
	C	73	90	90	130	130
	H	98	98(89.5)	102(92)	152	153
Rated voltage (V)		AC-110-24,DC100-220, C24			AC230, DC220 or AC110, DC110, DC24	
Starting current (A)		≤0.5			≤2	
Mechanical life (times)		14000		10000	5000	
Power (W)		14			35	

Wiring diagram

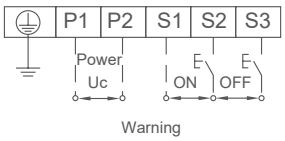

1. Counterclockwise manual operation is prohibited
2. When under manual operation, insert the handle at the starting point and rotate it 180 clockwise

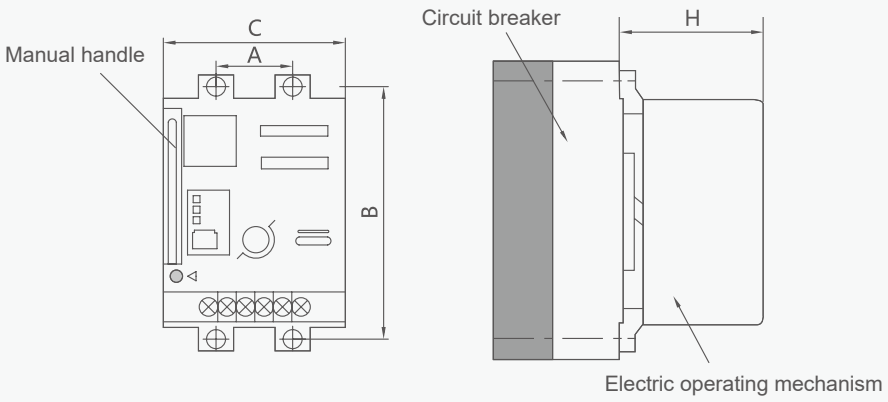

DIN Rail Adapter	Applicable frame	Rated thermal current Ith
	YCM7-250169	3P
	YCM7-125	
	YCM7-160	

YCM7 Series MCCB Accessories



Aluminum terminal block

Built-in type

Frame	Maximum rated current	Number of holes	Wide	Wiring aperture	Maximum wiring
400A	400A	1	30mm	Φ24	250 mm²
250A	250A	1	23mm	Φ16	180mm²
160A	160A	1	17.8mm	Φ14	125mm²
125A	125A	1	15.9mm	Φ10	78mm²



External type

Frame	Maximum rated current	Number of holes	Wide	Wiring aperture	Maximum wiring
800A	800A	2	38mm	Φ24	325mm²
		1	44mm	Φ27	480mm²
630A	630A	2(short)	30mm	Φ22	250mm²
		2(long)	30mm	Φ20	250mm²
400A	400A	1	30mm	Φ19.5	250mm²
250A	250A	2	23mm	Φ16	180mm²
		1	23mm	Φ16	180mm²
160A	160A	1	17mm	Φ13.5	125mm²
125A	125A	1	15.9mm	Φ11	80mm²

YCM8 Series

Distribution Apparatus



- Multi-function choices
- Design for small size
- Modular accessories for easy and convenient installation

CNC
ELECTRIC

YCM8 Series MCCB



YCM8-250S



YCM8-T/A-125S



YCM8RT-250S



YCM8LE-250S

General

YCM8 Series circuit breakers are developed according to domestic and international market demand, as well as similar products.
Its rated insulation voltage is up to 1000V, suitable for AC 50-60Hz distribution network circuit whose rated operation voltage is up to 690V, rated operation current from 10A to 2000A. It can distribute power, protect the circuit and power supply devices from the damage of overload, short circuit and under voltage, etc.
This series of circuit breaker is featured as high breaking capacity and short arcing. It can be installed vertically (namely vertical installation) and also installed horizontally (namely horizontal installation).

Standards: IEC60947-2.

Feature

Feature 1: Current limiting ability

Limiting the rise of short circuit current of circuit. The peak short circuit current and I2t power are much lower than the value expected.

U shape fixed contact design

The U shape fixed contact design achieves the technique of pre-breaking:
When the short circuit current goes through the contact system, there are forces that repel each other on the fixed contact and moving contact. The forces are produced with short circuit current and will enlarge synchronously when short circuit current enlarges. They elongate the electric arcing to enlarge their equivalent resistance to limit the rise of short circuit current.

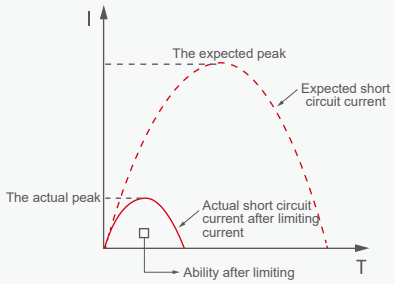

Feature 2: Modular accessories

The size of accessories is same for YCM8 with same frame.
You can choose the accessories according to your needs to extend the function of YCM8.

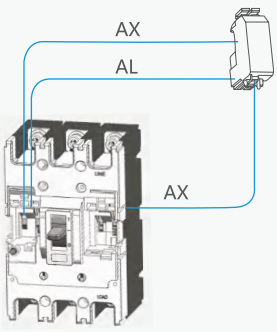

B

Feature 3: Frame miniaturization

5 frame class: 125 type, 160 type, 250 type, 400 type, 630 type, 800 type, 1250 type, 1600 type, 2000 type
The rated current of YCM8 series: 10A~2000A.

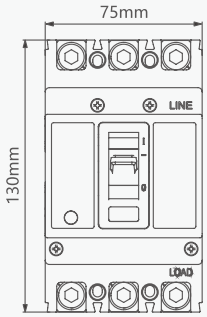

The outlook size of 125 frame is same as the original 63 frame, width is only 75mm.

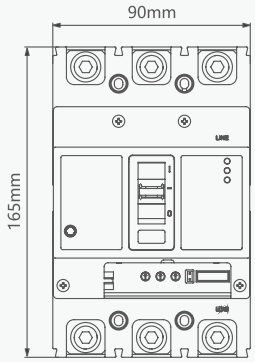

The outlook size of 160 frame is same as the original 100 frame, width is only 90mm.

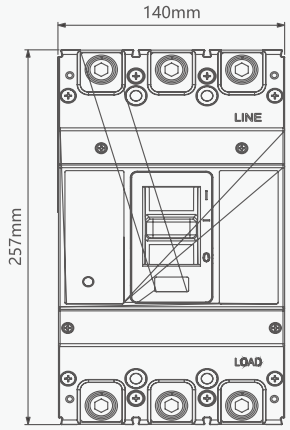

The outlook size of 630 frame is same as the original 400 frame, width is only 140mm.

Feature 4: Contact repulsion

The technical scheme:
See figure1, this new contact device is mainly consist of fixed contact, moving contact, shaft 1, shaft 2, shaft 3 and spring.
When the circuit breaker is closed, shaft 2 is at the right of spring angle. When there is large fault current, the moving contact rotates around the shaft 1 under the electric repulsion caused by current itself. When shaft 2 rotate over the top of spring angle, the moving contact rotate upward quickly under the reaction of spring and breaking the circuit fast. The breaking capacity is improved with the optimized contact structure.

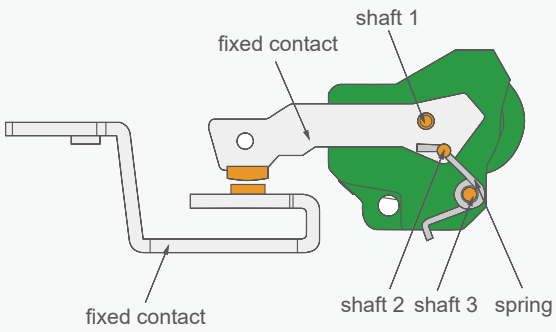

figure1

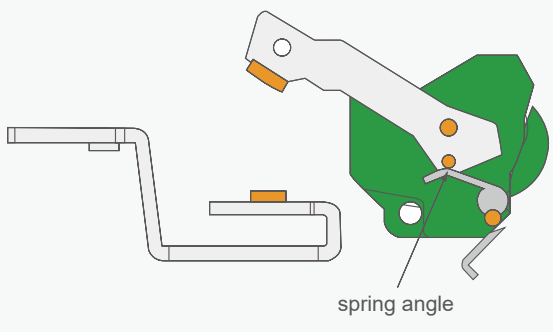

figure2 (at the situation of breaking)

Feature 5: Intelligent

YCM8 can be connected to Modbus communication system with special wire easily. With communication function, it can match with monitoring unit accessories to realize the door display, reading, setting and control.

Feature 6: Arc extinguishing system is modular

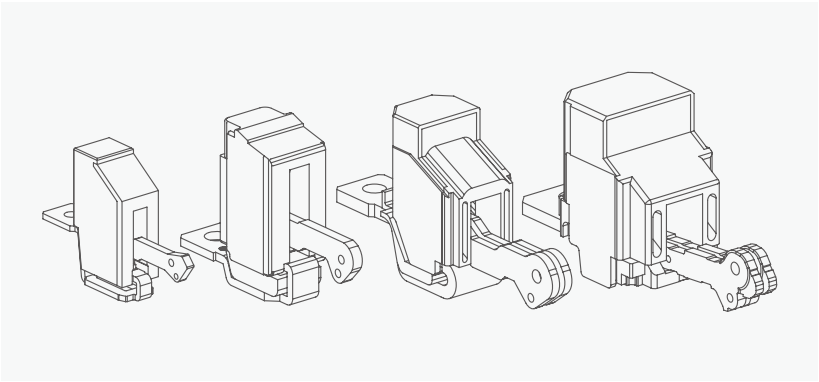

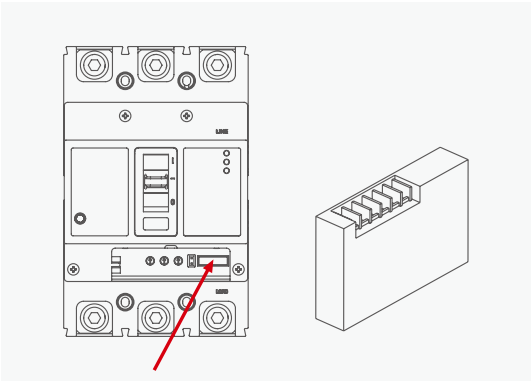

The communication is placed outside the body.

Operating conditions

- Altitude: Below 2000m
- Temperature: The temperature of media is not higher than 40°C (+45°C for marine products) and not lower than -5°C.
- Can withstand the bad environment of damp air, mold, radiation.
- The maximum inclination is 22.5 degree.
- Can work reliably under normal vibration of ship.
- Can work reliably under earthquake(4g).
- Should be no rain and snow hit.
- The media should be no explosion danger and no gas which can corrode the metal or destroy the insulating or conductive dust.

Overview

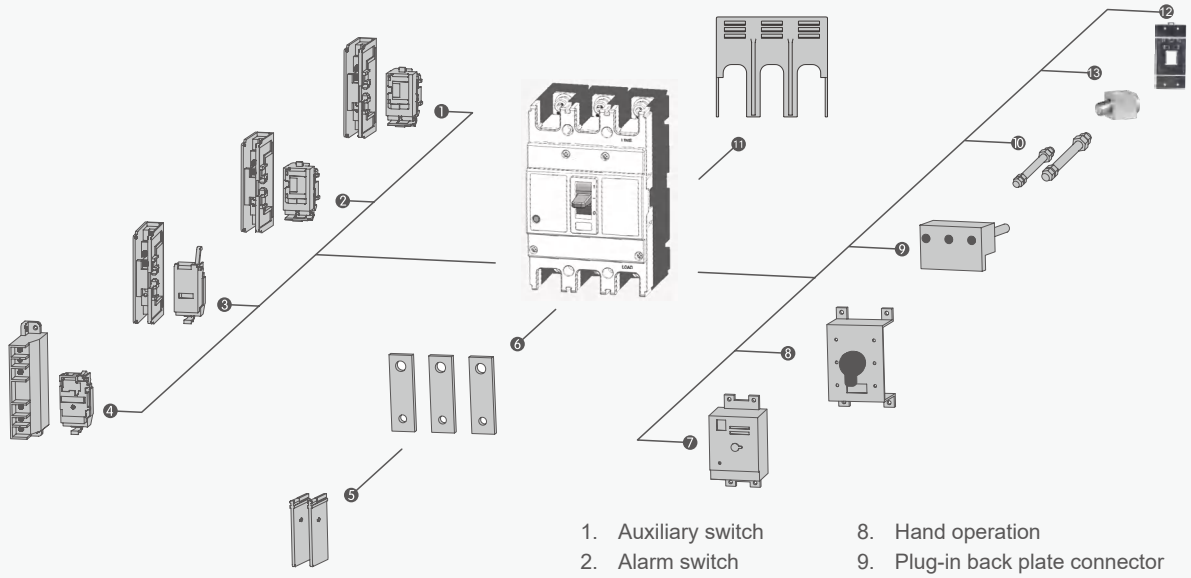

1. Auxiliary switch
2. Alarm switch
3. Shunt release
4. Under voltage release
5. Phase partition
6. Front plate connector
7. Electric operation
8. Hand operation
9. Plug-in back plate connector
10. Back plate connector
11. Terminal cover
12. DIN Rail Adapter(125/160/250A)
13. Connecting terminal

B

Curve

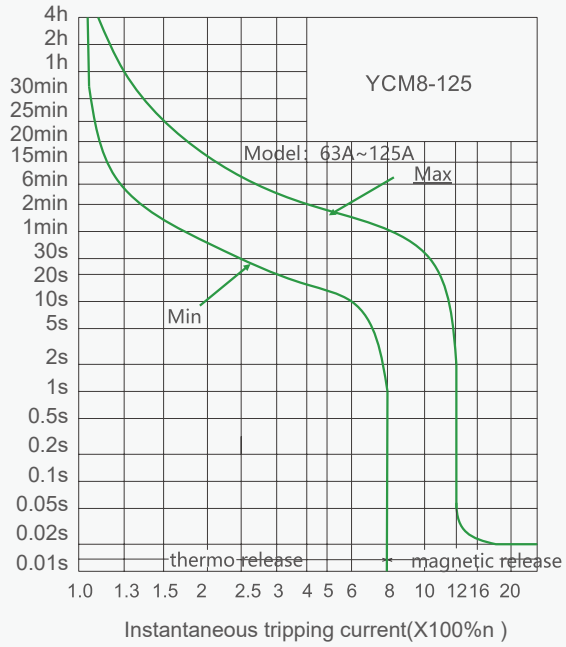
YCM8-125
Model: 63A~125A
Max
Min
thermo release
magnetic release
4h
2h
1h
30min
25min
20min
15min
6min
2min
1min
30s
20s
10s
5s
2s
1s
0.5s
0.2s
0.1s
0.05s
0.02s
0.01s
1.0 1.3 1.5 2 2.5 3 4 5 6 8 10 1216 20
Instantaneous tripping current(X100%n)

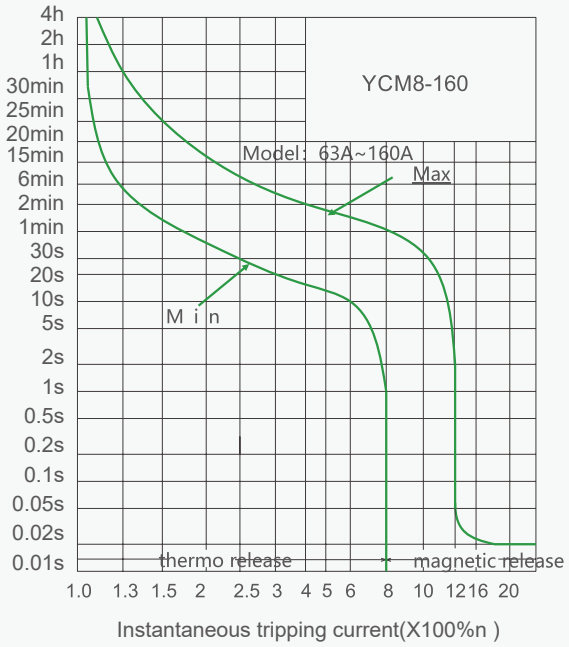
YCM8-160
Model: 63A~160A
Max
Min
thermo release
magnetic release
4h
2h
1h
30min
25min
20min
15min
6min
2min
1min
30s
20s
10s
5s
2s
1s
0.5s
0.2s
0.1s
0.05s
0.02s
0.01s
1.0 1.3 1.5 2 2.5 3 4 5 6 8 10 1216 20
Instantaneous tripping current(X100%n)

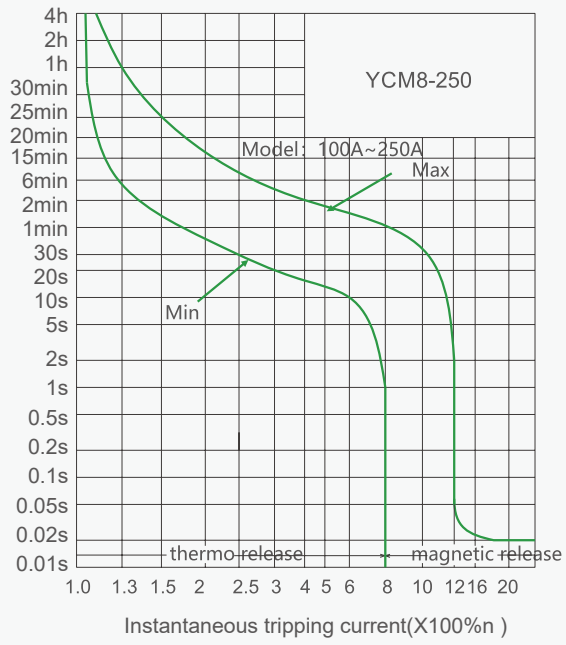
YCM8-250
Model: 100A~250A
Max
Min
thermo release
magnetic release
4h
2h
1h
30min
25min
20min
15min
6min
2min
1min
30s
20s
10s
5s
2s
1s
0.5s
0.2s
0.1s
0.05s
0.02s
0.01s
1.0 1.3 1.5 2 2.5 3 4 5 6 8 10 1216 20
Instantaneous tripping current(X100%n)

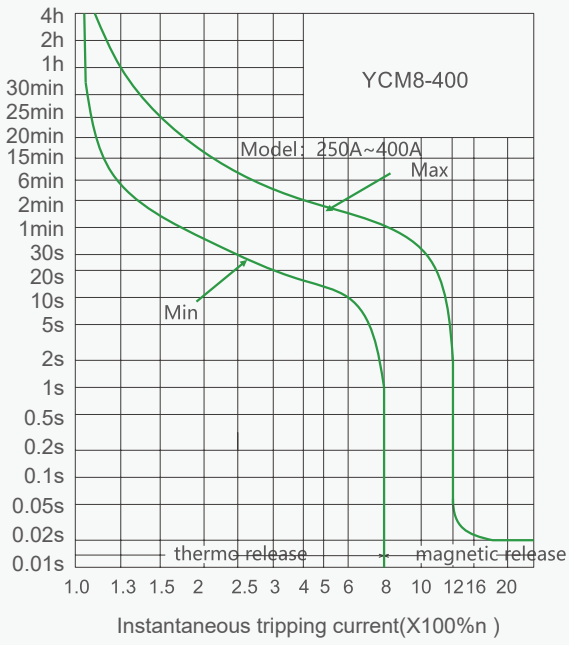
YCM8-400
Model: 250A~400A
Max
Min
thermo release
magnetic release
4h
2h
1h
30min
25min
20min
15min
6min
2min
1min
30s
20s
10s
5s
2s
1s
0.5s
0.2s
0.1s
0.05s
0.02s
0.01s
1.0 1.3 1.5 2 2.5 3 4 5 6 8 10 1216 20
Instantaneous tripping current(X100%n)

YCM8 Series MCCB

Curve

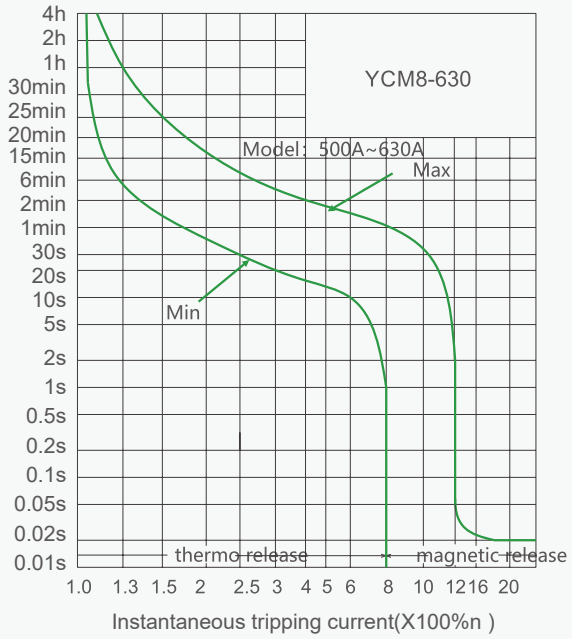

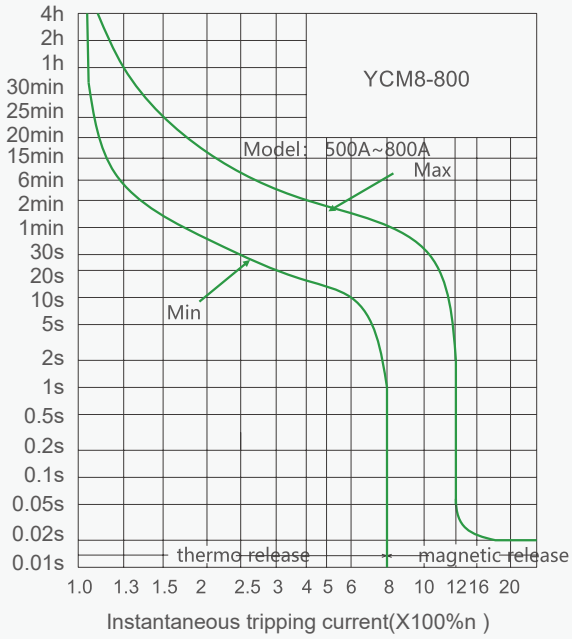

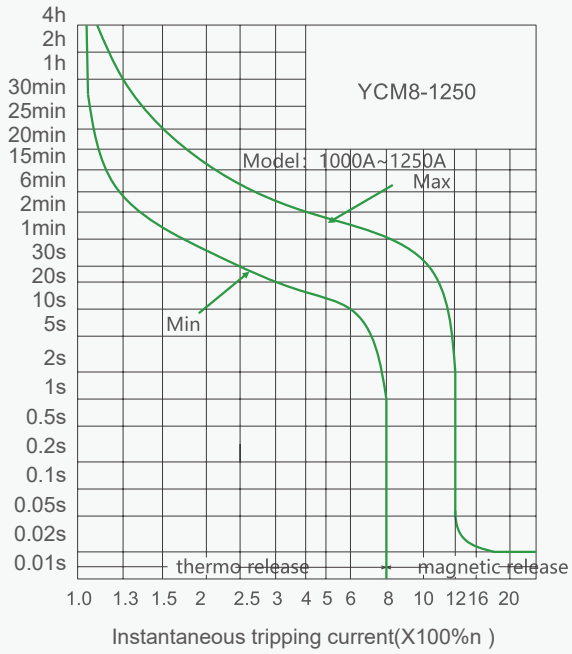

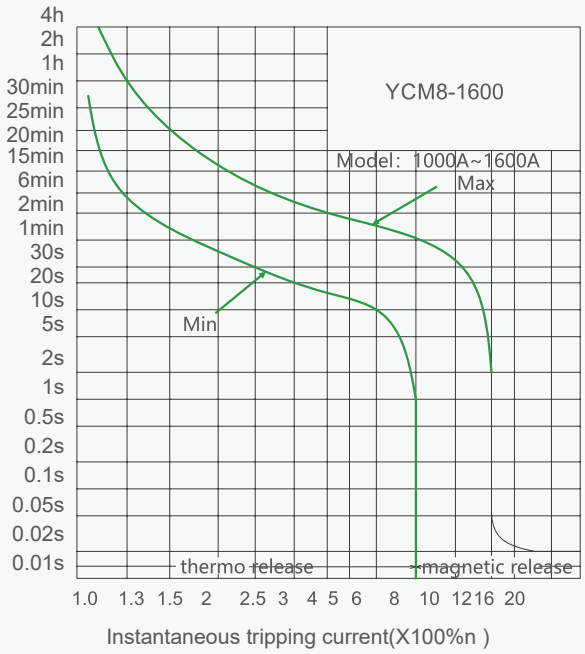

YCM8 MCCB

Type designation

YCM8 - 125 H P / 4 300 2 A 125A Q1 D1 Q 2

Type	Frame Inm	Breaking capacity Icu/Ics(kA)			Operation	Poles
YCM8	125	H			P	4
MCCB	125, 160, 250, 630, 800, 1250, 1600, 2000 Note: 125 is the upgraded 63 frame, 160 is the upgraded 100 frame, 250 is the upgraded 225 frame, 630 is the upgraded 400 frame, 1250 is the upgraded 800 frame, 2000 is the upgraded 1600 frame		S	H	P: Motor-driven Z: Rotory handle W: operate directly	1: one poles 2: two poles 3: three poles 4: four poles
		125	15/10	25/18		
		160	25/18	35/25		
		250	25/18	35/25		
		400	35/25	50/35		
		630	35/25	50/35		
		800	-	50/35		
		1250	-	50/35		
		1600		50/35		
		2000		50/35		

Tripping mode and inner accessory	Application	Option for 4P MCCB	Rated current(A)
300	2	A	125A
The first number indicate release mode 2: only with the instantaneous release device 3: complex release Note: the last two numbers are attachment code (see attachment table)	1: for distribution 2: for protecting the motor	A: N pole without protection, can not switch B: N pole without protection, can switch C: N pole without protection, can switch D: N pole without protection, can not switch	125 10,16,20,32,40,50,63,80, 100,125 160 10, 16, 20, 32, 40, 50, 63,80, 100, 125, 140, 160 250 100, 125, 140, 160, 180,200, 225, 250 400 250, 300, 315, 350, 400 630 400, 500, 630 800 500, 630, 700, 800 1250 1000, 1250 1600 1000,1250,1600 2000 2000

Accessory voltage		Motor-driven operation voltage	Connection	With the connection plate or not
Q1		D	Q	2
Under Voltage Release Q1: AC220V Q2: AC240V Q3: AC380V Q4: AC415V	Shunt Release F1: AC220V F2: AC380V F3: DC110V F4: DC24V	DC3 D5:AC220V D6:AC110V D7:DC220V D8:DC110V D9:AC110~240V D10: DC100~220V	Q: Front H: Rear C: Plug-in	1: not 2: yes

YCM8 MCCB

Technical data

Frame Current(A)		125		160	
Type		YCM8-125S	YCM8-125H	YCM8-160S	YCM8-160H
Number of poles		1,2,3,4		2,3,4	3,4
Products		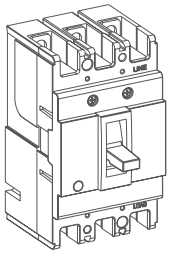		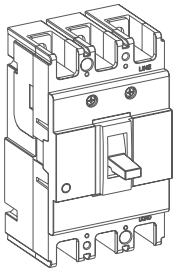	
Rated current In (A)		10, 16, 20, 25, 32, 40, 50, 63, 80, 100, 125		10, 16, 20, 25, 32, 40, 50, 63, 80, 100, 125, 140, 160	
Rated voltage Ue(V)		AC220/230V,400V		AC220/230V,400,690V	
Rated insulation voltage Ui(V)		AC1000V		AC1000V	
Short Circuit Breaking Capacity (kA) Icu/Ics	AC220V	18/12	35/25	35/25	50/35
	AC400V	15/10	25/18	25/18	35/25
	AC690V	-	-	-	8/4
Operating Circle Times	ON	600		3000	
	OFF	9000		7000	
Dimension(mm) a-b-c-ca 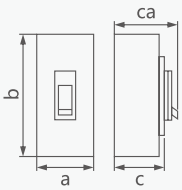	1P	25-130-68-94		/	/
	2P	50-130-68-94		60-155-68-94	60-155-82-108
	3P	75-130-68-94		90-155-68-94	90-155-82-108
	4P	100-130-68-94		120-155-68-94	120-155-82-108
Automatic release		Thermal electromagnetic type		Thermal electromagnetic type	

YCM8 MCCB

Technical data

Frame Current(A)		250			400	
Type		YCM8-250S		YCM8-250H	YCM8-400S	YCM8-400H
Number of poles		1	2,3,4	3,4	3,4	
Products		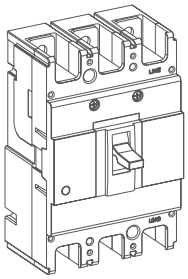			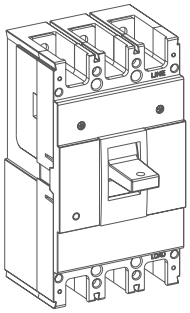	
Rated current In (A)		100, 125, 140, 160, 180, 200, 225, 250			250, 315, 350, 400	
Rated voltage Ue(V)		AC220/230V, 400V, 690V			AC220/230V, 400V, 690V	
Rated insulation voltage Ui(V)		AC1000V			AC1000V	
Short Circuit Breaking Capacity (kA) Icu/Ics	AC220V	25/18	35/25	50/35	50/35	75/50
	AC400V	-	25/18	35/25	35/25	50/35
	AC690V	-	-	8/4	8/4	10/7.5
Operating Circle Times	ON	3000			2000	
	OFF	7000			4000	
Dimension(mm) a-b-c-ca 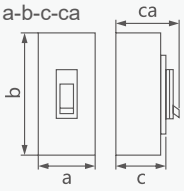	1P	35-165-68-96		-	140-257-103-152	
	2P	70-165-68-96		-		
	3P	105-165-68-96		105-165-88-116		
	4P	140-165-68-96		140-165-88-116	184-257-103-152	
Automatic release		Thermal electromagnetic type			Thermal electromagnetic type	

YCM8 MCCB

Technical data

Frame Current(A)		630		800
Type		YCM8-630S	YCM8-630H	YCM8-800H
Number of poles		3,4		3,4
Products		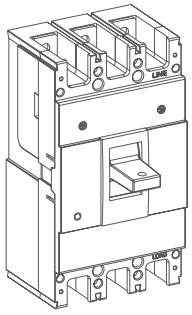		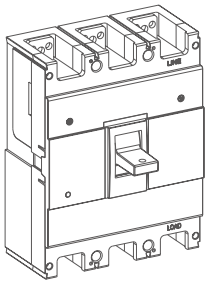
Rated current In (A)		250, 315, 350, 400, 500, 630		500, 630, 700, 800
Rated voltage Ue(V)		AC220/230V, 400V, 690V		AC220/230V, 400V, 690V
Rated insulation voltage Ui(V)		AC1000V		AC1000V
Short Circuit Breaking Capacity (kA) Icu/Ics	AC220V	50/35	75/50	75/50
	AC400V	35/25	50/35	50/35
	AC690V	8/4	10/7.5	15/10
Operating Circle Times	ON	2000		1500
	OFF	4000		4000
Dimension(mm) a-b-c-ca 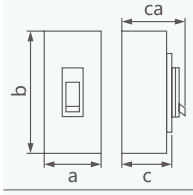	3P	140-257-103-152		210-275-103-152
	4P	184-257-103-152		280-275-103-153
Automatic release		Thermal electromagnetic type		Thermal electromagnetic type

YCM8 MCCB

Frame Current(A)		1250		1600			2000
Type		YCM8-1000H	YCM8-1250H	YCM8-1000H	YCM8-1250H	YCM8-1600H	YCM8-2000H
Number of poles		3,4		3,4			3,4
Products		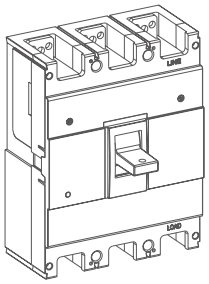		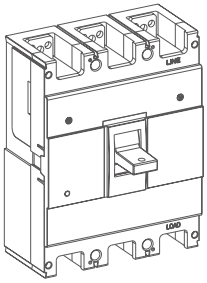			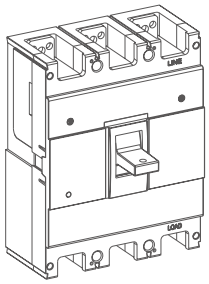
Rated current In (A)		800, 1000, 1250		1000, 1250, 1600			2000
Rated voltage Ue(V)		AC220/230V, 400V, 690V		AC400V			AC400V
Rated insulation voltage Ui(V)		AC1000V		AC1000V			AC1000V
Short Circuit Breaking Capacity (kA) Icu/Ics	AC220V	75/50		75/50			75/50
	AC400V	50/35		50/35			50/35
	AC690V	15/10		20/15			20/15
Operating Circle Times	ON	1500		1000			1000
	OFF	4000		2000			2000
Dimension(mm) a-b-c-ca 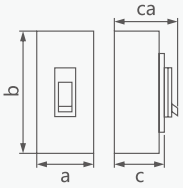	3P	210-275-103-155		210-340-141-244			
	4P	288-275-103-155		280-340-141-244			
Automatic release		Thermal electromagnetic type		Thermal electromagnetic type			Thermal electromagnetic type



Aluminum terminal block

Built-in type

Frame	Number of holes	Wide	Wiring aperture	Maximum wiring
400A	1	30mm	Φ24	250 mm²
250A	1	23mm	Φ16	180mm²
160A	1	15.9mm	Φ10	78mm²
125A	1	14mm	Φ8	40mm²



External type

Frame	Maximum rated current	Number of holes	Wide	Wiring aperture	Maximum wiring
1600A	1600A	4	63mm	Φ13.5	400mm²
1250A	1250A	4	58mm	Φ13	254mm²
1250A	1000A	3	58mm	Φ13	254mm²
800A	800A	3	30mm	Φ20	300mm²
630A	630A	2	30mm	Φ20	300mm²
400A	400A	1	28mm	Φ20	300mm²
250A	250A	1	23mm	Φ16	180mm²
160A	160A	1	15.9mm	Φ14	70mm²
125A	125A	1	15.9mm	Φ11	60mm²
63A	63A	1	12.7mm	Φ8	40mm²

YCM8LE Earth Leakage MCCB

B

Type designation

YCM8LE - 160 S P / 4 300 2 A 160A L1 Y1 Q1 D1 Q 2

Type	Frame Inm	Breaking capacity Icu/Ics(kA)	Operation	Poles	Tripping mode and inner accessory
YCM8LE	160	H	P	4	300
Earth Leakage MCCB	125,160,250, 400,800	M,H 30/25 65/42 65/50	P: electric drive operation Z:rotational handle W: operate directly	3: three poles 4: four poles	The first digit represents release type 2: has instantaneous release only; 3:complex release Note:Later two digits are the code of accessories(see accessory table)

Application	Option for 4P MCCB	Rated current(A)	Rated residual operating current (mA)
2	A	160A	L1
none: power protection 2: motor protection	A: N-pole without protection,cannot close or open B:N-pole without protection,can close and open C:N-pole with protection,can close and open D:N-pole with protection,cannot close or open Note: Unless otherwise mentioned,4-pole products will be classified as CAT. B by default.	125 10,16,20,32,40,50,63,80, 100,125 160 10, 16, 20, 32, 40, 50, 63,80, 100, 125, 140, 160 250 100, 125, 140, 160, 180,200, 225, 250 400 250, 300, 315, 350, 400 800 500, 630, 700, 800	160:50mA, 100mA, 300mA, 500mA 250:50mA,100mA, 300mA,500mA 400-1250:80mA, 100mA, 300mA, 500mA

Rated delay time (if selected)	Accessory voltage		Motor-driven operation voltage	Connection	With the connection plate or not
Y1	Q1		D1	Q	2
0.1s,0.45s,1s,2s	Under Voltage Release Q1: AC220V Q2: AC240V Q3: AC380V Q4: AC415V	Shunt Release F1: AC220V F2: AC380V F3: DC110V F4: DC24V	DC3 Electric Operating D5:AC230V D6: AC110V D7: DC220V D8: DC110V D9: AC110-240V D10: DC100-220V	Q: Front-board H: Back-board C: Plug-in type	1: not 2: yes

YCM8LE Earth Leakage MCCB

Technical data

Frame Current(A)		160	250
Type		YCM8LE-160S	YCM8LE-250S
Number of poles		1P+N,3,4	3,4
Products		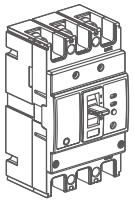	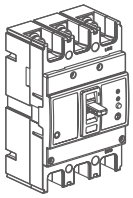
Rated current In (A)		10, 16, 20, 32, 40, 50, 63, 80, 100, 125, 140, 160	100, 125, 140, 160, 180, 200, 225, 250
Rated voltage Ue(V)		AC400V	AC400V
Rated insulation voltage Ui(V)		AC690V	AC690V
Leakage indication system		Button	Button
Short Circuit Breaking Capacity (kA) Icu/Ics	AC400V	25/18	25/18
	AC690V	-	-
Operating Circle Times	ON	8000	8000
	OFF	15000	15000
Quick type	Rated residual operating current	30, 100, 500 (adjustable)	30, 100, 500 (adjustable)
	Max. actuation time	0.1	0.1
Delay type	Rated residual operating current	100, 300, 500 (adjustable)	100, 300, 500 (adjustable)
	Max. actuation time	-	-
	Max. actuation time under 21Δn (s)	0.45, 1.0, 2.0 (adjustable)	0.45, 1.0, 2.0 (adjustable)
	Inertia non-actuation time under 21Δn (s)	0.1, 0.5, 1.0	0.1, 0.5, 1.0
Dimension(mm) a-b-c-ca 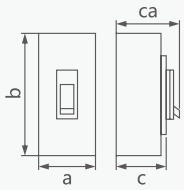	4P	120-155-68-90	140-165-68-92
Weight(kg)	4P	1.2	2.5
Electric operating device (MD)		●	●
External drive handle		●	●
Automatic release		Thermal electromagnetic type	Thermal electromagnetic type

YCM8LE Earth Leakage MCCB

Technical data

Frame Current(A)		400	800
Type		YCM8LE-400S	YCM8LE-800H
Number of poles		3,4	3,4
Products		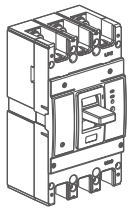	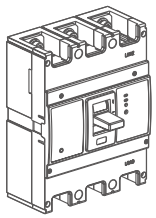
Rated current In (A)		250, 315, 350, 400	500, 630, 700, 800
Rated voltage Ue(V)		AC400/690V	AC400/690V
Rated insulation voltage Ui(V)		AC690V	AC690V
Leakage indication system		Button	Button
Short Circuit Breaking Capacity (kA) Icu/Ics	AC400V	35/25	50/35
	AC690V	8/4	15/10
Operating Circle Times	ON	2000	2000
	OFF	4000	4000
Quick type	Rated residual operating current	30, 100, 500 (adjustable)	30, 100, 500 (adjustable)
	Max. actuation time	0.1	0.1
Delay type	Rated residual operating current	100, 300, 500 (adjustable)	100, 300, 500 (adjustable)
	Max. actuation time	-	-
	Max. actuation time under 21Δn (s)	0.45, 1.0, 2.0 (adjustable)	0.45, 1.0, 2.0 (adjustable)
	Inertia non-actuation time under 21Δn (s)	0.1, 0.5, 1.0	0.1, 0.5, 1.0
Dimension(mm) a-b-c-ca 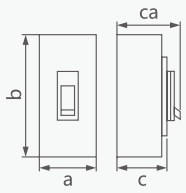	4P	185-257-103-155	280-275-103-155
Weight(kg)	4P	8.4	17.5
Electric operating device (MD)		●	●
External drive handle		●	●
Automatic release		Thermal electromagnetic type	Thermal electromagnetic type

YCM8T/A,RT Thermomagnetic Adjustable MCCB

Type designation

YCM8 RT - 160 H Z / 3 300 2 A 160A Q1 Q 2

Type	The adjustable type	Frame Inm	Breaking capacity Icu/Ics(-kA)	Operation	Poles
YCM8	RT	160	H	Z	3
Moulded-case circuit breaker (MCCB)	RT:Thermal and Magnetic adjust type T/A:Only thermal adjust	160, 250, 400, 630, 800	160 S 25/18 H 35/25 225 25/18 35/25 400 25/18 50/35 630 35/25 50/35 800 35/25 50/35	Dc1, DC2, DC3 P: electric drive operation Z:rotational handle W: operate directly ① Electric operation DC3	3: three poles 4: four poles

Tripping mode and inner accessory	Application	Option for 4P MCCB	Rated current(A)
□00	2	A	160A
The first digit represents release type 2: has instantaneous release only; 3:complex release Note:Later two digits are the code of accessories(see accessory table)	1: power protection 2: motor protection	A: N-pole without protection,cannot close or open B:N-pole without protection,can close and open C:N-pole with protection,can close and open D:N-pole with protection,cannot close or open	125 20-25, 25-32, 32-40, 40-50, 50-63, 63-80, 80-100, 100-125, 125-160 250 100-125, 125-160, 160-200, 200-250 400 200-250, 250-320, 320-400 630 400-500, 500-630 800 500-630, 630-800,1250

Accessory voltage		Motor-driven operation voltage	Connection	With the connection plate or not
Q1		D1	Q	2
Under Voltage Release Q1: AC220V Q2: AC240V Q3: AC380V Q4: AC415V	Shunt Release F1: AC220V F2: AC380V F3: DC110V F4: DC24V	DC3 Electric Operating D5:AC230V D6: AC110V D7: DC220V D8: DC110V D9: AC110-240V D10: DC100-220V	Q: Front-board H: Back-board C: Plug-in type	1: not 2: yes

YCM8T/A,RT Thermomagnetic Adjustable MCCB

Technical data

Type		YCM8T-160S YCM8T/A-160S	YCM8T-160H YCM8T/A-160H	YCM8T-250S YCM8T/A-250S	YCM8T-250H YCM8T/A-250H
Type		160		250	
Number of poles		3,4		3,4	
Products		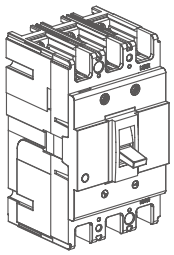		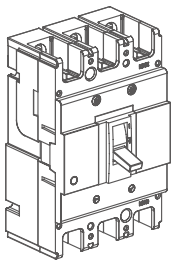	
Rated current In (A)		20-25, 25-32, 32-40, 40-50, 50-63, 63-80,80-100, 100-125, 125-160		100-125, 125-160, 160-200, 200-250	
Rated voltage Ue(V)		AC400/690V		AC400/690V	
Rated insulation voltage Ui(V)		AC1000V		AC1000V	
Short Circuit Breaking Capacity (kA) Icu/Ics	AC400V	25/18	35/25	25/18	35/25
	AC690V	-	8/4	-	8/4
Operating Circle Times	ON	3000		3000	
	OFF	7000		7000	
Dimension(mm) a-b-c-ca 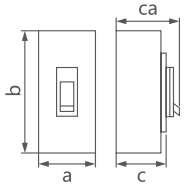	3P	90-155-68-94	90-155-82-108	105-165-68-96	105-165-88-116
	4P	120-155-68-94	120-155-82-108	140-165-68-96	140-165-88-116
Weight(kg)	3P	1.0	1.0	1.5	
	4P	1.1	1.4	1.9	
Electric operating device (MD)		•		•	
External drive handle		•		•	
Automatic release		Thermal electromagnetic type		Thermal electromagnetic type	

YCM8T/A,RT Thermomagnetic Adjustable MCCB

Technical data

Type		YCM8T-400S YCM8T/A-400S	YCM8T-400H YCM8T/A-400H	YCM8T-630S YCM8T/A-630S	YCM8T-630H YCM8T/A-630H	YCM8T-800H YCM8T/A-800H	YCM8T-1250H YCM8T/A-1250H
Type		400		630		800	1250
Number of poles		3,4		3,4		3,4	3,4
Products		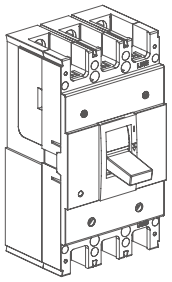		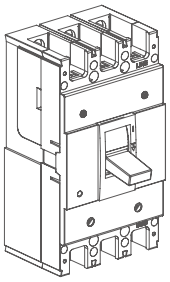		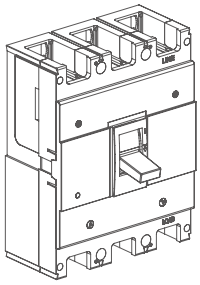	
Rated current In (A)		200-250, 250-320, 320-400		400-500, 500-630		400-500, 500-630, 630-800	800-1000, 1000-1250
Rated voltage Ue(V)		AC400/690V		AC400/690V		AC400/690V	
Rated insulation voltage Ui(V)		AC1000V		AC1000V		AC1000V	
Short Circuit Breaking Capacity (kA) Icu/Ics	AC400V	35/25	50/35	35/25	50/35	50/35	
	AC690V	8/4	10/7.5	8/4	10/7.5	15/10	
Operating Circle Times	ON	2000		2000		1500	
	OFF	4000		4000		4000	
Dimension(mm) a-b-c-ca 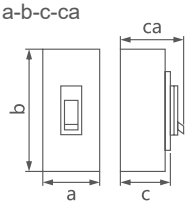	3P	140-257-103-152		140-257-103-152		210-275-103-152	
	4P	185-257-103-152		185-257-103-152		280-275-103-152	
Weight(kg)	3P	5.5		5.7		9.5	
	4P	7.0		7.5		12.5	
Electric operating device (MD)		•		•		•	
External drive handle		•		•		•	
Automatic release		Thermal electromagnetic type		Thermal electromagnetic type		Thermal electromagnetic type	

YCM8E Electronic Adjustable Circuit Breaker



General

YCM8E series electronic circuit breakers are applicable for low-voltage power systems of AC 50-60Hz, rated operating voltage up to 1000V and rated operating current from 16A to 1600A.

Operating conditions

1. Altitude up to 2000m;
2. Ambient medium temperature should be within -5°C to +40°C (+45°C for marine products);
3. It can withstand the effect of damp air;
4. It can withstand the effect of salt fog or oil mist;
5. It can withstand the effect of moulds;
6. It can withstand the effect of nuclear radiation;
7. The max inclination is 22.5°C.
8. It still can work reliably when the ship subjects to normal vibration;
9. It can still work reliably if the product subjects to the earthquake (4g).
10. Places where the surrounding medium is free from explosion danger, and far away from gas or conductive dust that would erode the metal or destroy the insulation;
11. Keep away from rain or snow.

Features

1. Circuit breaker can be equipped with undervoltage release, shunt release, auxiliary contacts, alarm contacts, electric operating mechanism, rotary operating handle and other accessories.
2. Circuit breaker has protection functions of overload long delay, short-circuit short delay and short-circuit instantaneous protection, the user can set the required protection characteristics (user only needs to operate the DIP switch for settings of protection function parameters).
3. Circuit breaker has ground fault and thermal analog protection functions, pre-alarm indication over-current indication, load current indication, digital current analysis technology, and it can achieve a higher level of protection.

YCM8E Electronic Adjustable Circuit Breaker

Curve

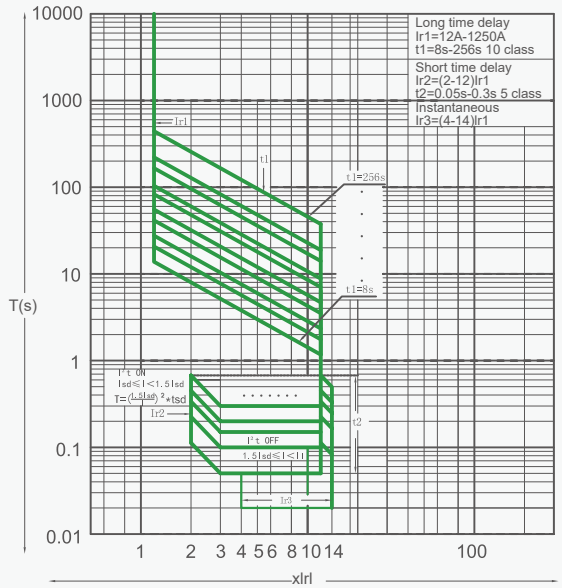

6 knob adjustable

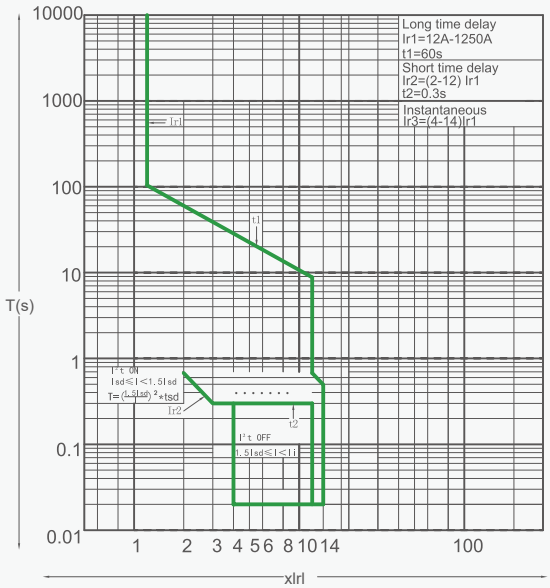

3 knob adjustable

Panel and function description

Intelligent release panel

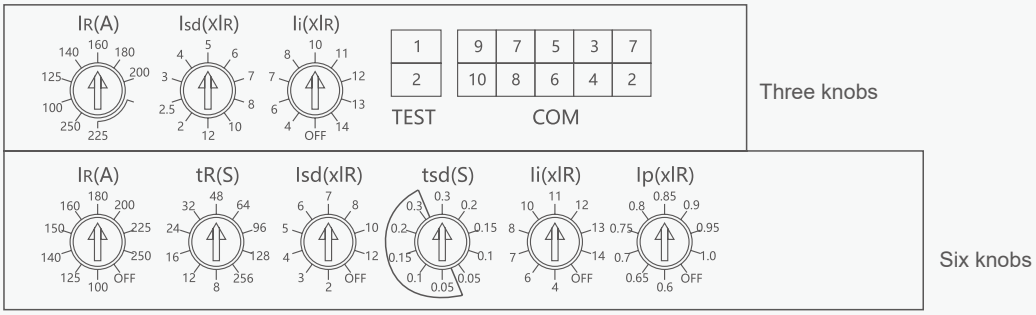

Tripping test port (TEST)

1 Tripping test input DC12V(+); 2 Tripping test input DC12V(-)

Panel adjustment knob as follows in turn:IR(A) Isd(×IR) Ii(×IR)

- R: Overload long delay tripping setting current;
- Isd: Short-circuit short delay tripping setting current;
- Ii: Short-circuit instantaneous tripping setting current;

The rest parameters are set by factory default, or set by remote communication, as follows:

- tR: Overload long delay setting time, factory default: 60s;
- tsd: Short-circuit short delay setting time, factory default: 0.1s;
- Ip: Overload pre-alarm setting current, factory default: 0.85*IR;

YCM8E Electronic Adjustable Circuit Breaker

Type designation

YCM8 E - 160 H / 3 400 2 A 63A~160A Three knobs

Type	The adjustable type		Frame Inm	Code of operating mode	Poles
YCM8	E	-	160	H	3
MCCB	E: electronic adjustable		Inm=160 Inm=250 Inm=400 Inm=800 Inm=1000 Inm=1250 Inm=1600		3: three poles 4: four poles

Tripping mode and inner accessory	Application	Option for 4P MCCB	Number of knobs
400	2	A	Three knobs
The intelligent tripping device Accessory code, see accessory table	1: for distribution 2: for protecting the motor	A: N-pole without protection,cannot close or open B:N-pole without protection,can close and open C:N-pole with protection,can close and open D:N-pole with protection,cannot close or open Note: Unless otherwise mentioned,4-pole products will be classified as CAT. B by default.	Three knobs or Six knobs

YCM8E Electronic Adjustable Circuit Breaker

Technical data

Frame Current(A)		160	250	400
Type		YCM8E-160H	YCM8E-250H	YCM8E-400H
Number of poles		3,4	3,4	3,4
Products		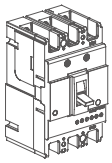	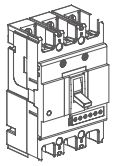	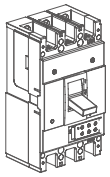
Rated current In (A)		12-32, 25-63, 40-100, 63-160	100-250	200-400
Rated voltage Ue(V)		AC400/690V	AC400/690V	AC400/690V
Rated insulation voltage Ui(V)		AC1000V	AC1000V	AC1000V
Short Circuit Breaking Capacity (kA) Icu/Ics	AC400V	35/25	35/25	50/35
	AC690V	8/4	8/4	10/7.5
Operating Circle Times	ON	1500	1000	1000
	OFF	7000	7000	4000
Dimension(mm) a-b-c-ca 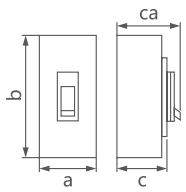	3P	90-155-88-115	105-165-88-115	140-257-103-152
	4P	120-155-88-115	140-165-88-115	185-257-103-152
Weight(kg)	3P	1.6	2.1	4.9
	4P	2.1	2.7	6.5
Electric operating device (MD)		•	•	•
External drive handle		•	•	•
Automatic release		Thermal electromagnetic type	Thermal electromagnetic type	Thermal electromagnetic type

YCM8E Electronic Adjustable Circuit Breaker

Technical data

Frame Current(A)		630	800	1000	1250	1600
Type		YCM8E-630H	YCM8E-800H	YCM8E-1000H	YCM8E-1250H	YCM8E-1600H
Number of poles		3,4	3,4	3,4	3,4	3,4
Products		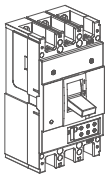	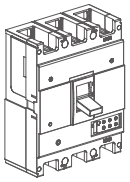	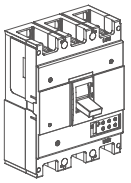	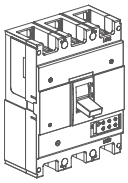	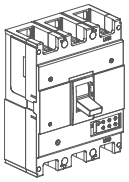
Rated current In (A)		400-630	400-630, 500-800	630-1000	850-1250	500-1250, 630-1600
Rated voltage Ue(V)		AC400V	AC400V	AC400V	AC400V	AC400V
Rated insulation voltage Ui(V)		AC1000V	AC1000V	AC1000V	AC1000V	AC1000V
Short Circuit Breaking Capacity (kA) Icu/Ics	AC400V	50/35	50/35	50/35	50/35	65/50
	AC690V					
Operating Circle Times	ON	1000	1000	1000	1000	1000
	OFF	4000	4000	4000	4000	4000
Dimension(mm) a-b-c-ca 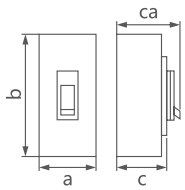	3P	140-257-103-152	210-257-103-152	210-275-103-152		210-340-141-244
	4P	185-257-103-152	280-257-103-152	280-275-103-152		280-340-141-244
Weight(kg)	3P	5.4	8.3	9.9	9.9	16.8/17.1/18.82
	4P	7.3	11.1	13.2	13.2	21.9/23.2/24.5
Electric operating device (MD)		•	•	•	•	•
External drive handle		•	•	•	•	•
Automatic release		Thermal electromagnetic type	Thermal electromagnetic type	Thermal electromagnetic type	Thermal electromagnetic type	Thermal electromagnetic type

YCM8YV Series Electronic MCCB



General

The rated insulation voltage of YCM8YV series electronic liquid crystal molded case circuit breaker is 1000V. It is suitable for the distribution network with AC 50-60Hz, rated voltage of 400V and below and rated current up to 800A. Under normal circumstances, the circuit breaker can be used for infrequent switching of circuits and infrequent starting of motors. It can protect the circuits from overload and short circuit, as well as over-voltage, under-voltage and phase loss.

Standards:IEC60947-2

Type designation

Product name		Frame current		Number of poles	Tripping mode and inner accessory	Rated current
YCM8YV	-	250	/	3	300	250A
YCM8YV		250 400 630 800		3:3P 4:4P		250:100~250A 400:160~400A 630:252~630A 800:320~800A

Operating Conditions

1. The ambient temperature is -5°C~+40°C, and the altitude is no more than 2,000m.
2. Atmospheric conditions: the max. temperature is 40°C, and the relative humidity of air is not more than 50%; higher relative humidity can be allowed at lower temperature like 90% at 20°C. Special measures shall be taken for occasional condensation due to temperature change.
3. The external magnetic field of the installation site shall not exceed 5 times of the geomagnetic field in any direction, avoid large electromagnetic interference (such as high-power motor or frequency converter) near the product, explosive and corrosive gas, as well as invasion by rain and snow, and keep the place dry and ventilated.
4. Class of pollution: Class 3; installation category: III.

Features

1. Environmental protection, Wide range of application.
2. Easy to operate,Maintenance-free, High security.
3. Clearly visible real isolation break.
4. Single cabinet structure, field-configurable, and expandable as desired.
5. Replace SF6 load switch ring main unit.

YCM8YV Series Electronic MCCB

Technical data

Type		YCM8YV-250	YCM8YV-400	YCM8YV-630	YCM8YV-800
Frame Current(A)		250	400	630	800
Pole number		3,4	3,4	3,4	3,4
Rated Current (A)		100-250	160-400	252-630	252-630,320-800
Rated voltage Ue(V)		AC400/690V	AC400/690V	AC400/690V	AC400/690V
Rated insulation voltage Ui(V)		AC1000V	AC1000V	AC1000V	AC1000V
Short Circuit Breaking Capacity (kA) Icu/Ics	AC400V	35/25	50/35	50/35	50/35
	AC690V	8/4	10/7.5	10/7.5	15/10
Operating Circle Times	ON	1000	1000	1000	1000
	OFF	7000	4000	4000	4000
Dimension(mm) a-b-c-ca 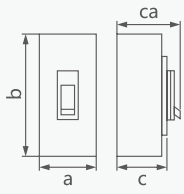	3P	105-165-88-115	140-257-103-155	140-257-103-155	210-275-103-155
	4P	140-165-88-115	185-257-103-155	185-257-103-155	280-275-103-155

YCM8YV Series Electronic MCCB

Spec. & Functions			
Classification		Description	●
Display Mode		LCD+LED indicator light	●
Interface operation		Key	●
Protective functions	Current protection	Overload long time delay protection	●
		Short-circuit short time delay protection	●
		Short-circuit instantaneous protection	●
		Overload pre-alarm function	-
	Voltage protection	Under-voltage and over-voltage protection functions	-
		Phase loss protection function	●
		Protection function of fault neutral line at power supply side	○
		Protection function of voltage loss and trip at power supply side	●
	Communication function	DL/T 645-2007 Multi-functional meter communication protocol	○
		Modbus-RTU communication protocol	○
		Communication hardware 1-channel RS-485	-
	Function of external DI/O port	Auxiliary communication power input	●
		1-channel DI/O programmable control input	●
		1-channel passive contact output	-
	Fault record	Storage of 10 times of trip faults (the upper computer needs to read the feedback information uploaded each time for query of more records.)	●
		Record of max./min. voltage and current in 30 days	●
		Record of 10 self-check events of protector	-
		Record of 80 protection function enable/disable events	●
		Record of 10 gate position change events	●
		Record of 10 alarm events	●
		Record of 10 times of high voltage power loss and recovery	●
	Time function	With the function of real-time clock which consists of YY, MM, DD, hh, mm and ss.	●

Notes: symbol "●" indicates that this function is available; symbol "○" indicates that this function can be selected; and symbol "-" indicates that this function is not available.

YCM8YV Series Electronic MCCB

Overall and mounting dimensions

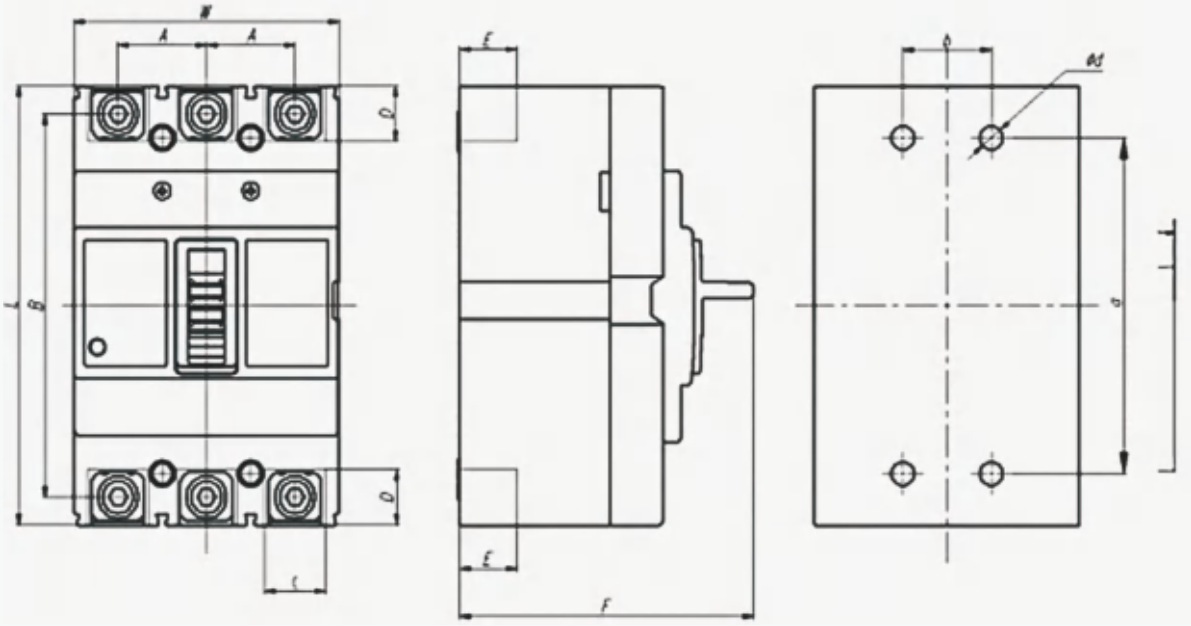

Model / Size(mm)	YCM8YV-250		YCM8YV-400		YCM8YV-630		YCM8YV-800	
	3P	4P	3P	4P	3P	4P	3P	4P
L	165		257		275.5		275.5	
w	105	140	140	184	210	280	210	280
A	35		43.5		70		70	
B	144		230		243.5		243.5	
C	24		31		45		45	
D	21		29		30		30	
E	22.5		31.5		24		26	
F	116		155		155		155	
a	126		194		243		243	
b	35		44		70		70	
Φd	4xΦ4.5		4xΦ7		4xΦ8		4xΦ8	

YCM8YV Series Electronic MCCB

Inner accessories

Accessories of YCM8, YCM8LE, YCM8T/A, YCM8RT, YCM8E are the same.

Model		YCM8-125	YCM8-160	YCM8-250	YCM8-400/630	YCM8-800 YCM8-1000 YCM8-1250 YCM8-1600
Breaking capacity		S,H	S,H	S,H	S,H	H
No. of poles		2,3,4	2,3,4	3,4	3,4	3,4
Code	Accessory name					
208, 308	Alarm contact(SD)	●■	●■	●■	●■	●■
210, 310	Shunt release(MX)	□■	□■	□■	□■	□■
220, 320	Auxiliary contact(OF)	○■	○■	○■	○■	○■
230, 330	Under-voltage release(MN)	■■	■■	■■	■■	■■
240, 340	Shunt auxiliary contact(MX+MN)	○□■	○□■	○□■	○□■	○□■
260, 360	Two groups auxiliary contacts(2OF)	○○■	○○■	○○■	○○■	○○■
270, 370	Auxiliary contact UVT(OF+MN)	○■■	○■■	○■■	○■■	○■■
218, 318	Shunt alarm contact(MX+SD)	●□■	●□■	●□■	●□■	●□■
228, 328	Auxiliary alarm contact(OF+SD)	●○■	●○■	●○■	●○■	●○■
238, 338	UVT alarm contact(MN+SD)	●■■	●■■	●■■	●■■	●■■
248, 348	Shunt auxiliary alarm contact(MX+OF+SD)	●○□■	●○□■	●○□■	●○□■	●○□■
268, 368	Two groups aux alarm contact(2OF+SD)	●○○■	●○○■	●○○■	●○○■	●○○■
278, 378	Aux contact UVT alarm contact(OF+MN+SD)	●○■■	●○■■	●○■■	●○■■	●○■■
280, 380	Two groups aux contact and shunt(2OF+MX)	○○□■	○○□■	○○□■	○○□■	○○□■

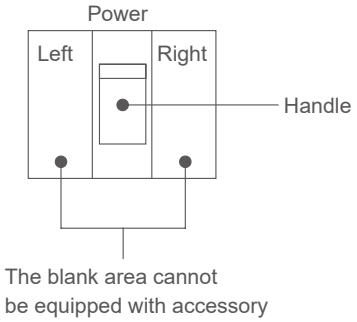

● Alarm switch ○ Auxiliary switch □ Shunt release ■ Undervoltage release(UVT)

Note:

- The company can provide three new products of right auxiliary switch, left shunt release and left undervoltage release for choice.
- Within 220, 320, 240, 340, 270 and 370 specifications, auxiliary switch can be supplied with two pair switches, please specify in the order.
- P switches of YCM8LE and YCM8E can not be equipped with right auxiliary switch, right shunt release and right undervoltage release.
- 125, 160, 2-pole products only have 208,210, 220, 308,310, 320.

YCM8 Series MCCB Accessories

Inner accessories

Internal accessories of YCM8, YCM8LE, YCM8RT, YCM8E series include undervoltage release, shunt release and auxiliary alarm release, their main technical parameters and wiring diagram are as follows:

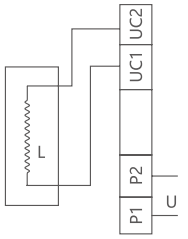

Undervoltage release	
Rated voltage of power supply	Main features
AC220,AC240 AC380,AC415	A. Undervoltage release should act when voltage drops to within 70% and 35% of the rated voltage. B. The undervoltage release should not be able to close to prevent the circuit breaker from closing when voltage is lower than 35% of the rated voltage. C. The undervoltage release should ensure to be closed and ensure reliable closing of the circuit breaker when voltage is equal to or greater than 85% of the rated voltage.

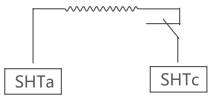

Shunt release	
Rated voltage of power supply	Main features
DC24,DC110 AC220,AC380	Shunt release can work reliably when the rated voltage value is at 70% and 110%.

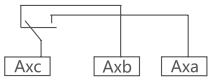

Auxiliary alarm contact	
Rated voltage of power supply	Main features
Auxiliary switch AC 125V 5A, AC 250V 3A DC 125V0.4A, DC 125V0.2A	Shunt release can work reliably when the rated voltage value is at 70% and 110%.

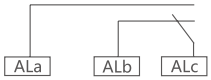

Alarm switch AC 125 5A, AC 250V 3A DC 125V0.4A, DC 125V 0.2A	Provide differentiated signals for the circuit breaker at" normal work" and "fault free trip" positions.

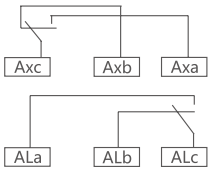

Auxiliary alarm switch AC 125V 5A, AC 250V 3A DC 125V0.4A.DC125V0.2A	Provide differentiated signals for the circuit breaker at close", "open" and "fault free trip" positions.

YCM8 Series MCCB Accessories

External accessories

The main technical parameters, dimensions and installation diagrams of external accessories for YCM8, YCM8LE, YCM8RT, YCM8T/A and YCM8E series are as follows:
DC3 electric operating mechanism.



Wiring diagram

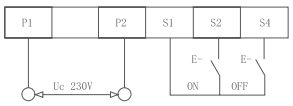

Model & Spec.	DC6-125	DC6-160	DC6-250	DC6-400~630	DC6-800	DC6-1000~1250	DC6-1600
Applicable model	YCM8-125	YCM8-160 YCM8LE-160 YCM8RT-160 YCM8T/A-160 YCM8E-160	YCM8-250 YCM8LE-250 YCM8RT-250 YCM8T/A-250 YCM8E-250	YCM8-400 YCM8LE-400 YCM8RT-400 YCM8T/A-400 YCM8E-400 YCM8-630 YCM8LE-630 YCM8RT-630 YCM8T/A-630 YCM8E-630	YCM8-800 YCM8LE-800 YCM8RT-800 YCM8T/A-800 YCM8E-800	YCM8-1000 YCM8RT-1000 YCM8T/A-1000 YCM8-1250 YCM8RT-1250 YCM8T/A-1250 YCM8E-1000 YCM8E-1250	YCM8-1600 YCM8E-1600
Rated voltage (V)	DC24V/AC23V/AC400V						
Starting current (A)	≤0.5				≤2		
Mechanical life (times)	15000		12000		10000		8000
Power (W)	14				35		

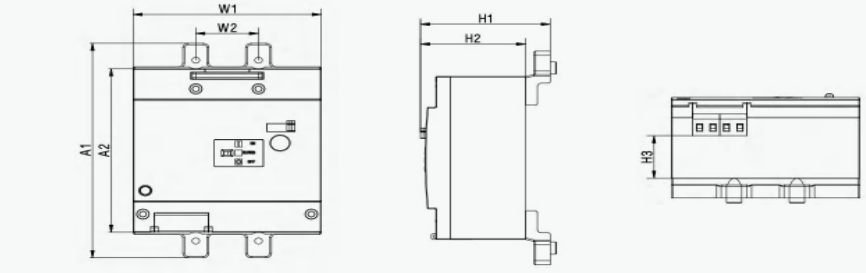

Model / Dimensions (mm)	DC6-125	DC6-160	DC6-250	DC6-400	DC6-630	DC6-800	DC6-1250	DC6-2000
A	130	155	166	257	257	257.5	257.5	340
A1	122	144	149.6	212	212	264	264	/
A2	109.5	109.5	114	177	177	174	174	174
W	75	90	105	140	140	210	210	210
W1	90	90	105	140	140	210	210	210
W2	25	30	35	44	44	70	70	70
H	140	151	153.5	170.5	170.5	190.5	190.5	225
H1	78.5	76	72	74	74	93	93	/
H2	62	62	59	61	61	78	78	78
H3	34.2	34.2	29.5	32.5	32.5	45	45	45

YCM8 Series MCCB Accessories

Thermo-magnetic release

1. The circuit breaker (for power distribution) has reverse time breaking characteristics of overcurrent release in all pole states and is energized simultaneously at room temperature 40°C.

Test current	Current time	Conventional time		Initial status
		In≤63	In<63	
Conventional non-trip current	1.05	1h	2h	Cold status
Conventional trip current	1.30	<1h	<2h	Hot status

2. When ambient temperature is +40'c for electric motor protection breaker, power on for every pole, inverse time limit characteristic of no temperature compensation is in the following sheet.

Test current	Current time	Conventional time	Initial status
		In≤800	
Conventional non-trip current	1.0	2h	Cold status
Conventional trip current	1.2	<2h	Hot status

3. Action property of the short-circuit release of the breaker
   - ♦ Instant trip (for power distribution)I=10In
   - ♦ Instant trip (for motor protection)I=12In
   - ♦ Current setting accuracy ±20%

Order guide

- Name and model of circuit breaker;
- Rated current and setting multiple of circuit breaker;
- Accessory name and rated voltage.

eg.: Order 50 sets of circuit breaker of power distribution 125 type, with rated current 100A standard type AC 380V undervoltage release, complex release, N-pole is not installed with overcurrent release and will close and open together with other three poles. Please write like this: YCM8-125L74370 100A1 B Q 3, circuit breaker 50 sets.

YCM8 Series MCCB Accessories

External accessories

The main technical parameters, dimensions and installation diagrams of external accessories for YCMB, YCMeLE YCM8RT,YCMeT/A and YCM8E series are as follows:

Function: Featuring unique design and transmission structure, closing, opening and re-latching of the circuit breaker can be realized by rotating the handle.

Model	YCM8-125A Manual operating mechanism	YCM8-160A Manual operating mechanism	YCM8-250A Manual operating mechanism	YCM8-400/630A Manual operating mechanism	YCM8-800-1250A Manual operating mechanism	YCM8-1600A Manual operating mechanism
Applicable model	YCM8-125	YCM8-160 YCM8LE-160 YCM8RT-160 YCM8T/A-160 YCM8E-160	YCM8-250 YCM8LE-250 YCM8RT-250 YCM8T/A-250 YCM8E-250	YCM8-400/630 YCM8LE-400/630 YCM8RT-400/630 YCM8T/A-400/630 YCM8E-400/630	YCM8-800/1000/1250 YCM8LE-800 YCM8RT-800 YCM8T/A-800/1000/1250 YCM8E-800/1000/1250	YCM8-1600 YCM8E-1600

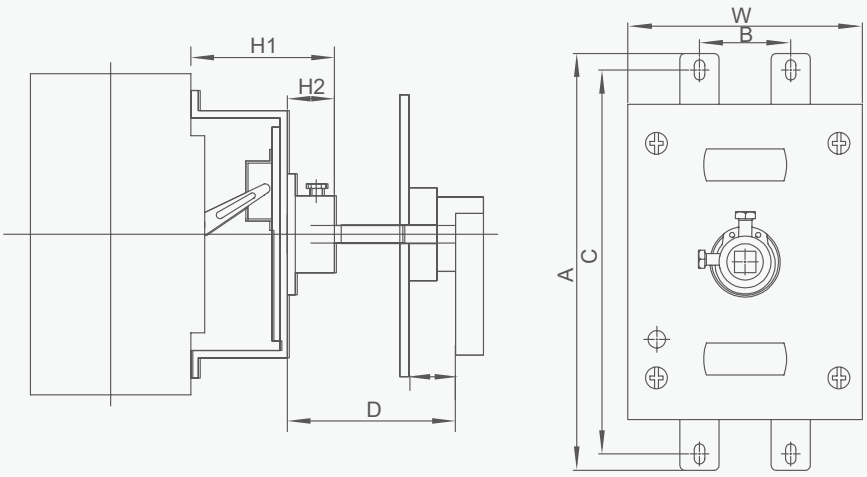

Type	W	A	B	C	H1	H2	D
YCM8-125	76.5	119	25	110	58	13.5	150
YCM8-160	82	146	30	132	57	13	150
YCM8-250	105	143	35	126	64	13.5	150
YCM8-400/630	140	212	128	193	91.5	16.5	150
YCM8-800~1250	208	266	198	246	95	20	150
YCM8-1600	210	324	70	303	68.4	17.9	150

Note: The operating handle extension rod has a default length of 150mm. Optional lengths include 200mm, 250mm, 300mm, 350mm, 400mm, and 500mm.

Installation Dimensions for Type F Handle

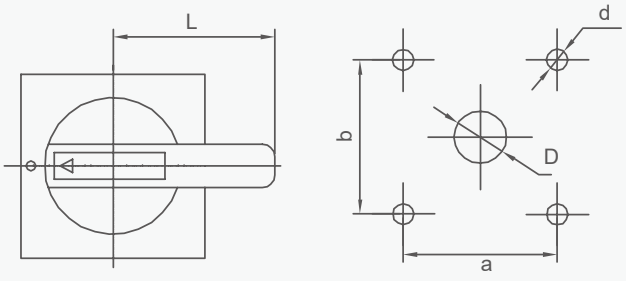

Type	A1 (63A-250A)	A2 (400A-1250A)	A3 (1600A)
D	Φ35	Φ35	Φ35
d	Φ4.5	Φ4.5	Φ4.5
a	65	65	65
b	65	65	65
L	65	95	125

YCM8 Series MCCB Accessories

Installation Dimensions for Type Y Handle

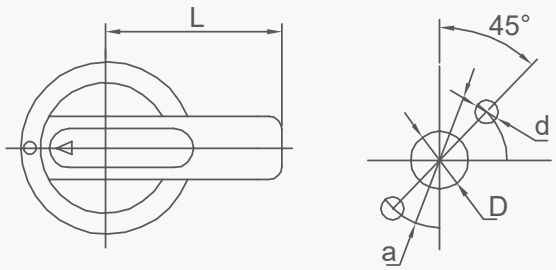

Type	B1 (63A-250A)	B2 (400A-1250A)	B3 (1600A)
D	Φ35	Φ35	Φ35
d	Φ4.5	Φ4.5	Φ4.5
a	65	65	65
L	65	95	125

Overall and mounting dimensions

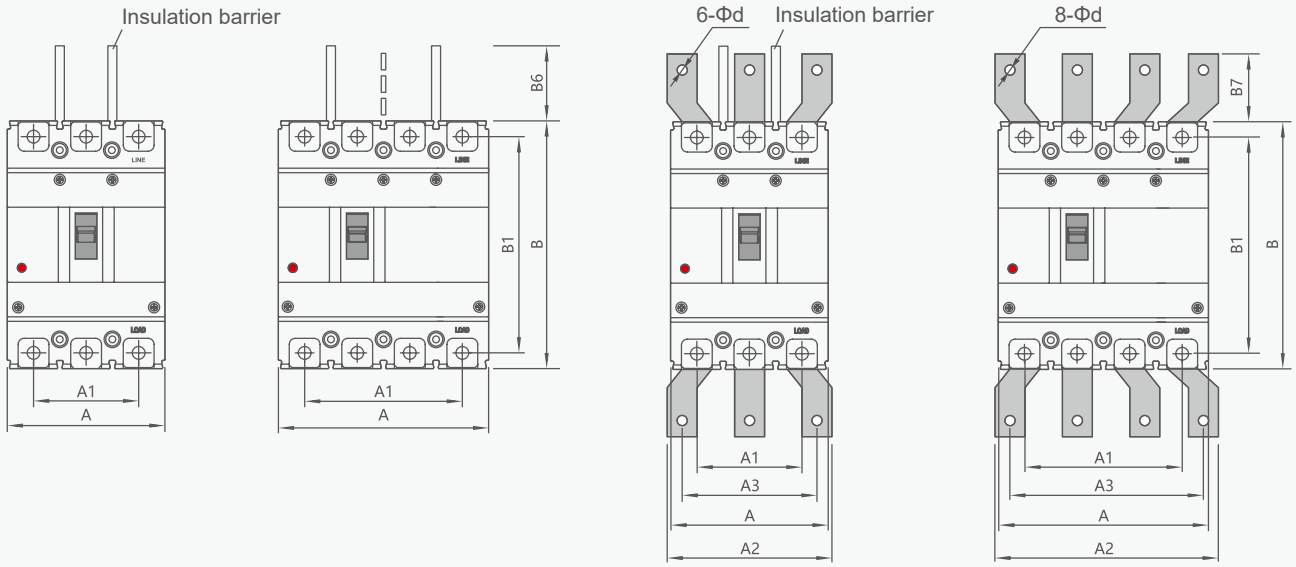

Mode				Outline dim.							
Moulded-case circuit breaker(MCCB)	Residual-current circuit breaker(RCCB)	Thermomagnetic adjustable circuit breaker	Electronic adjustable circuit breaker	A		A1		A2		A3	
				3P	4P	3P	4P	3P	4P	3P	4P
YCM8-125S	YCM8LE-125S	-	-	75	100	50	75	-	-	-	
YCM8-125H	YCM8LE-125H	-	-	75	100	50	75	-	-	-	
YCM8-160S	YCM8LE-160S	YCM8(RT-T/A)-160S	YCM8E-160H	90	120	60	90	-	-	-	
YCM8-160H	YCM8LE-160H	YCM8(RT-T/A)-160H		90	120	60	90	-	-	-	
YCM8-250S	YCM8LE-250S	YCM8(RT-T/A)-250S	YCM8E-250H	105	140	70	105	-	-	-	
YCM8-250H	YCM8LE-250H	YCM8(RT-T/A)-250H		105	140	70	105	-	-	-	
YCM8-400S	YCM8LE-400S	YCM8(RT-T/A)-400S	YCM8E-400H	140	184	88	132	140	196	112	168
YCM8-400H	YCM8LE-400H	YCM8(RT-T/A)-400H		140	184	88	132	140	196	112	168
YCM8-630S	YCM8LE-630S	YCM8(RT-T/A)-630S	YCM8E-630H	140	184	88	132	140	196	112	168
YCM8-630H	YCM8LE-630H	YCM8(RT-T/A)-630H		140	184	140	132	140	196	112	168
YCM8-800S	-	YCM8(RT-T/A)-800S	YCM8E-800H	210	140	140	210	180	250	140	210
YCM8-800H	YCM8LE-800H	YCM8(RT-T/A)-800H		210	140	140	210	180	250	140	210
YCM8-1000H			YCM8E-1000H	210	140	140	210	180	250	140	210
YCM8-1250H			YCM8E-1250H	210	140	140	210	180	250	140	210
YCM8-1600H			YCM8E-1600H	210	280	140	210	245	315	220	290

YCM8 Series MCCB Accessories

Overall and mounting dimensions(mm)

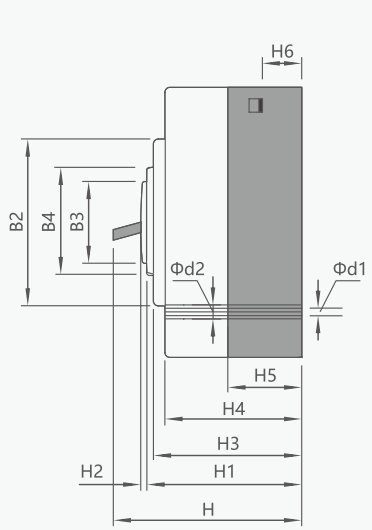

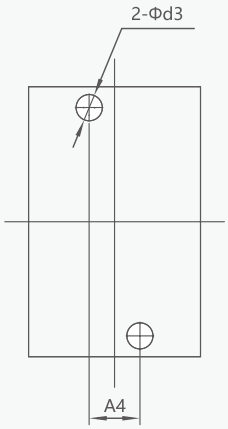

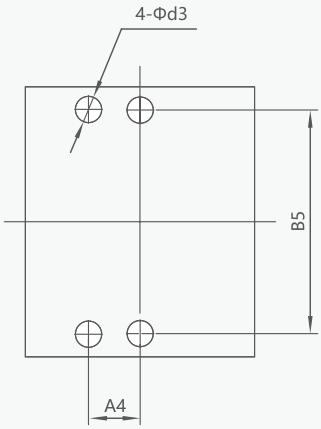

Outline dim.															Installation dim.		Terminal screw
B	B1	B2	B3	B4	B6	B7	H	H1	H2	H3	H4	H5	H6	Φd	Φd1	Φd2	Φd3	A4	B5	
130	114	84	50	59	50	-	90	72	4	68	61	40	21	-	4.5	8.5	5	25	110	M6/M8
130	114	84	50	59	50	-	90	72	4	68	61	40	21	-	4.5	8.5	5	25	110	M6/M8
155	134	102	50	59	64	-	93	72	4	82	75	40	21	-	4.5	8.5	5	30	132	M8
155	134	102	50	59	64	-	108	87	3	82	75	54	23	-	4.5	8.5	5	30	132	M8
165	144	102	50	59	50	-	96	72	4	68	61	40	23	-	4.5	8.5	5	30	126	M8
165	144	102	50	59	50	-	106	92	4	88	81	60	23	-	4.5	8.5	5	35	126	M8
257	230	150	90	99	100	-	155	107	5	103	97	64	30	-	7	13	7	44	194	M8
257	230	150	90	99	100	-	155	107	5	103	97	64	30	14	7	13	7	44	194	M8
257	230	150	90	99	100	43	155	107	5	103	97	64	30	14	7	13	7	44	194	M10
257	230	150	90	99	100	42	155	107	5	103	97	64	30	14	7	13	7	44	194	M10
275	243	150	90	102	100	87	155	107	5	103	97	64	30	14	8	14	7	70	243	M12
275	243	150	90	102	100	87	155	107	5	103	97	64	30	14	8	14	7	70	243	M12
275	243	150	90	102	100	87	155	107	5	103	97	64	58	14	8	14	7	70	243	M12
275	243	150	90	102	100	87	155	107	5	103	97	64	58	-	8	14	7	70	243	M12
340	310	255	105	105	108	63	244	163	6	153	141	100	58	11	7	13	15	70	303	M10

YCM8 Series MCCB Accessories

Overall and mounting dimensions(mm)

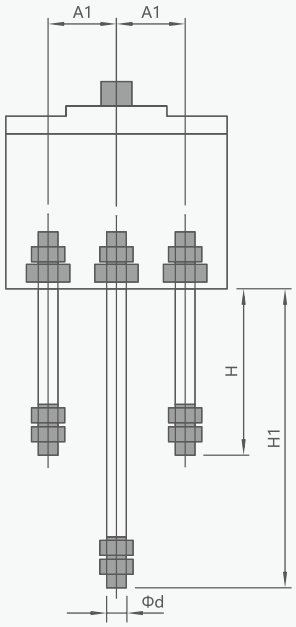

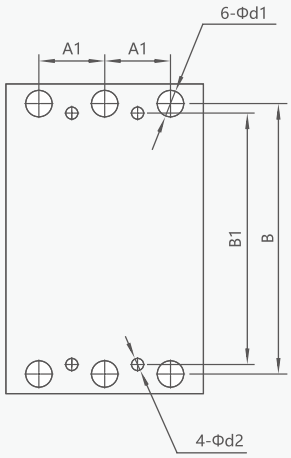

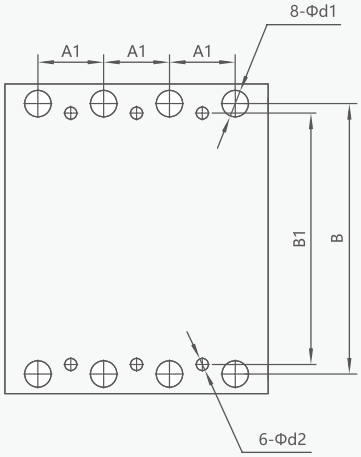

Mode				Outline dim.							
Moulded-case circuit breaker(MCCB)	Residual-current circuit breaker(RCCB)	Thermomagnetic adjustable circuit breaker	Electronic adjustable circuit breaker	A1	B	B1	H	H1	Φd	Φd1	Φd2
YCM8-125S	YCM8LE-125S	-	-	25	114	111	62	87	6	14	5
YCM8-125H	YCM8LE-125H	-	-	25	114	111	62	87	6	14	5
YCM8-160S	YCM8LE-160S	YCM8(RT-T/A)-160S	YCM8E-160H	30	134	132	72	112	8	18	5
YCM8-160H	YCM8LE-160H	YCM8(RT-T/A)-160H		30	134	132	72	112	8	18	5
YCM8-250S	YCM8LE-250S	YCM8(RT-T/A)-250S	YCM8E-250H	35	144	126	87	126	12	24	5
YCM8-250H	YCM8LE-250H	YCM8(RT-T/A)-250H		35	144	126	87	126	12	24	5
YCM8-400S	YCM8LE-400S	YCM8(RT-T/A)-400S	YCM8E-400H	44	230	194	83	136	18	35	5
YCM8-400H	YCM8LE-400H	YCM8(RT-T/A)-400H		44	230	194	83	136	18	35	7
YCM8-630S	YCM8LE-630S	YCM8(RT-T/A)-630S	YCM8E-630H	44	230	194	83	136	18	35	7
YCM8-630H	YCM8LE-630H	YCM8(RT-T/A)-630H		44	230	194	83	136	18	35	7
YCM8-800S	-	YCM8(RT-T/A)-800S	YCM8E-800H	70	243	243	174	243	26	48	7
YCM8-800H	YCM8LE-800H	YCM8(RT-T/A)-800H		70	243	243	174	243	26	48	7
YCM8-1000H			YCM8E-1000H	70	243	243	174	243	26	48	7
YCM8-1250H			YCM8E-1250H	70	243	243	174	243	26	48	7
YCM8-1600H			YCM8E-1600H	/	/	/	/	/	/	/	7

YCM8 Series MCCB Accessories

Overall and mounting dimensions(mm)

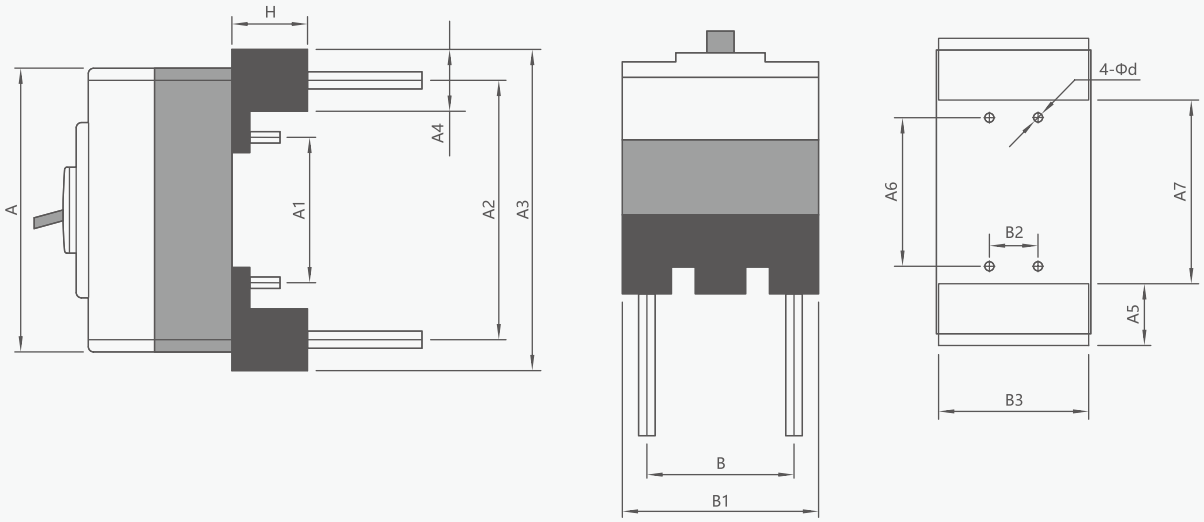

Mode				Outline dim.													
Moulded-case circuit breaker(MCCB)	Residual-current circuit breaker(RCCB)	Thermomagnetic adjustable circuit breaker	Electronic adjustable circuit breaker	A	A1	A2	A3	A4	A5	A6	A7	H	B	B1	B2	B3	Φd2
YCM8-125S	YCM8LE-125S	-	-	130	54	114	140	29	31	54	80	48	75	50	25	78	5.2
YCM8-125H	YCM8LE-125H	-	-	130	54	114	140	29	31	54	80	48	75	50	25	78	5.2
YCM8-160S	YCM8LE-160S	YCM8(RT-T/A)-160S	YCM8E-160H	155	54	134	168	38	40	54	92	52	90	60	30	93	6.5
YCM8-160H	YCM8LE-160H	YCM8(RT-T/A)-160H		155	54	134	168	38	40	54	92	52	90	60	30	93	6.5
YCM8-250S	YCM8LE-250S	YCM8(RT-T/A)-250S	YCM8E-250H	155	54	114	182	45	47	54	90	50	105	70	70	108	6.5
YCM8-250H	YCM8LE-250H	YCM8(RT-T/A)-250H		165	54	114	182	45	47	54	90	50	105	70	70	108	6.5
YCM8-400S	YCM8LE-400S	YCM8(RT-T/A)-400S	YCM8E-400H	257	140	230	282	55	55	140	171	60	134	87	44	136	8.2
YCM8-400H	YCM8LE-400H	YCM8(RT-T/A)-400H		257	140	230	282	55	55	140	171	60	134	87	44	136	8.2
YCM8-630S	YCM8LE-630S	YCM8(RT-T/A)-630S	YCM8E-630H	257	140	230	282	55	55	140	171	60	134	87	44	136	8.2
YCM8-630H	YCM8LE-630H	YCM8(RT-T/A)-630H		257	140	230	282	55	55	140	171	60	134	87	44	136	8.2
YCM8-800S	-	YCM8(RT-T/A)-800S	YCM8E-800H	275	155	243	298	55	56	155	187	60	206	140	70	208	8.2
YCM8-800H	YCM8LE-800H	YCM8(RT-T/A)-800H		275	155	243	298	55	56	155	187	60	206	140	70	208	8.2
YCM8-1000H			YCM8E-1000H	275	155	243	298	55	56	155	187	60	206	140	70	208	8.2
YCM8-1250H			YCM8E-1250H	275	155	243	298	55	56	155	187	60	206	140	70	208	8.2
YCM8-1600H			YCM8E-1600H	/	/	/	/	/	/	/	/	/	/	/	/	/	/

YCM8 Series MCCB Accessories

Overall and mounting dimensions(mm)

of YCM8-1600H and YCM8E-1600H

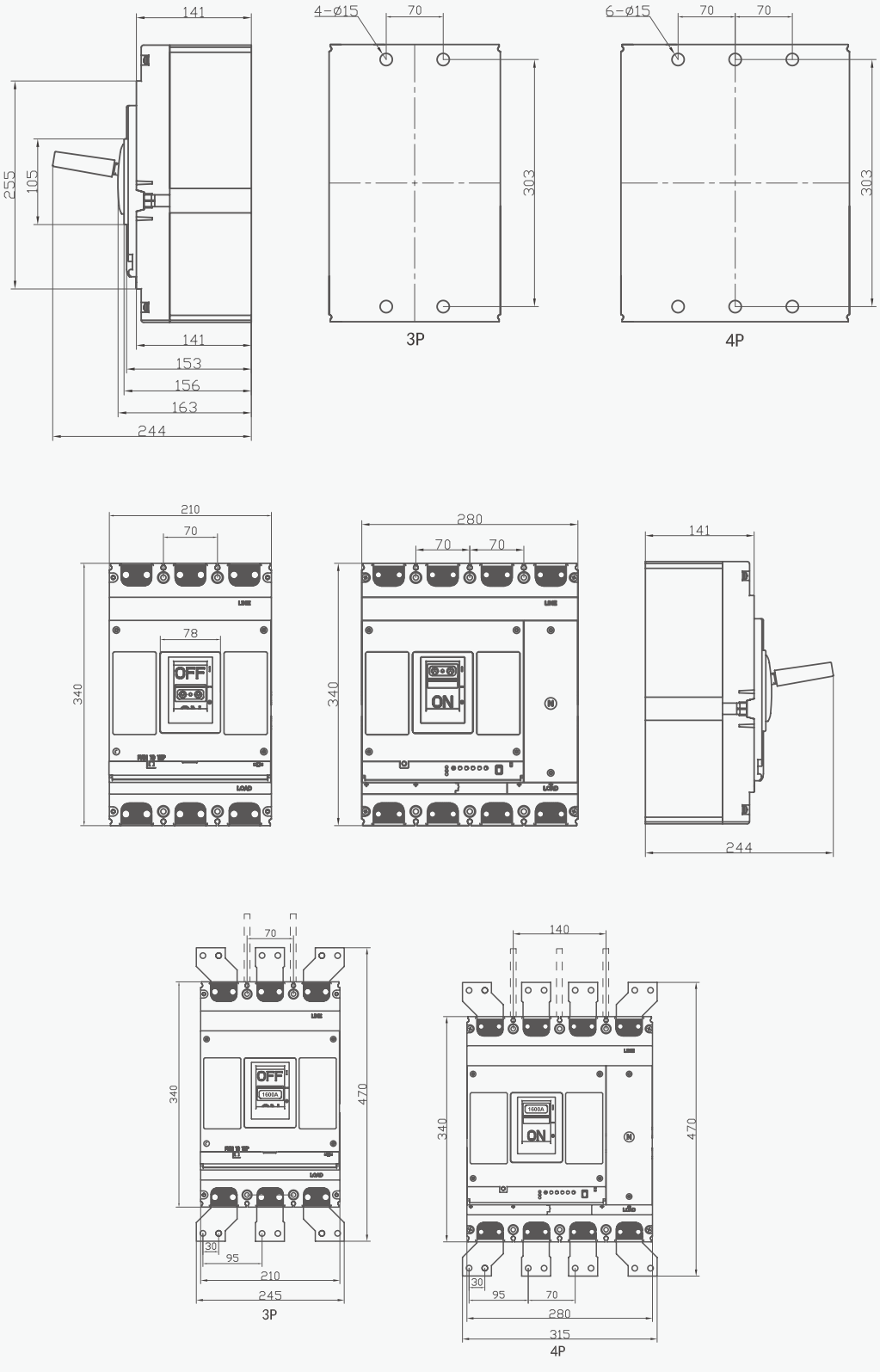

YCM8 Series MCCB Accessories



Aluminum terminal block

Built-in type

Frame	Maximum rated current	Number of holes	Wide	Wiring aperture	Maximum wiring
400A	400A	1	30mm	Φ24	250 mm²
250A	250A	1	23mm	Φ16	180mm²
160A	160A	1	17.8mm	Φ14	125mm²
125A	125A	1	15.9mm	Φ10	78mm²



External type

Frame	Maximum rated current	Number of holes	Wide	Wiring aperture	Maximum wiring
1600A	1600A	4	63mm	Φ24	350mm²
1250A	1250A	4	55mm	Φ21	300mm²
1000A	1000A	4	55mm	Φ21	300mm²
800A	800A	2	38mm	Φ24	325mm²
		1	44mm	Φ27	480mm²
400A 250A	400A 250A	1	28mm	Φ20	300mm²
		1	23mm	Φ16	180mm²
630A	630A	2(short)	30mm	Φ22	250mm²
		2(long)	30mm	Φ20	250mm²
400A	400A	1	30mm	Φ19.5	250mm²
250A	250A	2	23mm	Φ16	180mm²
		1	23mm	Φ16	180mm²
160A	160A	1	17mm	Φ13.5	125mm²
125A	125A	1	15.9mm	Φ11	80mm²

YCM8N Series MCCB



General

YCM8N Series circuit breakers are developed according to domestic and international market demand, as well as similar products.

Its rated insulation voltage is up to 1000V, suitable for AC 50-60Hz distribution network circuit whose rated operation voltage is up to 690V, rated operation current from 10A to 630A. It can distribute power, protect the circuit and power supply devices from the damage of overload, short circuit and under voltage, etc.

This series of circuit breaker is featured as high breaking capacity and short arcing. It can be installed vertically (namely vertical installation) and also installed horizontally (namely horizontal installation).

Standards: IEC60947-2.

Operating conditions

1. Altitude: Below 2000m
2. Temperature: The temperature of media is not higher than 40°C (+45°C for marine products) and not lower than -5°C.
3. Can withstand the bad environment of damp air, mold, radiation.
4. The maximum inclination is 22.5 degree.
5. Can work reliably under normal vibration of ship.
6. Can work reliably under earthquake(4g).
7. Should be no rain and snow hit.
8. The media should be no explosion danger and no gas which can corrode the metal or destroy the insulating or conductive dust.

Type designation

YCM8N - 125 S P / 3 300 2 125A

Type	Frame Inm	Breaking capacity Icu/Ics(kA)	Operation	Poles
YCM8N	125	S	P	3
MCCB	125, 250, 400, 630	125 250 400 630	Default — handle direct operation; P — electric operation Z — rotating handle operation	3: three poles

Tripping mode and inner accessory	Application	Rated current(A)
300	2	125A
The first number indicate release mode 2: only with the instantaneous release device 3: complex release Note: the last two numbers are attachment code (see attachment table)	1: for distribution 2: for protecting the motor	125 10, 16, 20, 32, 40, 50, 63, 80, 100, 125 250 100, 125, 140, 160, 180, 200, 225, 250 400 250, 300, 315, 350, 400 630 400, 500, 630

YCM8N Series MCCB

Product Accessories

Accessory Product List

- Electrical Accessories: Shunt Trip, Undervoltage Release, Auxiliary Contact, Alarm Cotact, Integrated Auxiliary & Alarm Contact
- Mechanical Accessories: Phase Spacer, Extension Terminal, Manual Operating Mechnism, Electrical Operating Mechanism
- Installation Accessories: Fixed Plate Rear Accessory, Plug-in Accessory

Overview

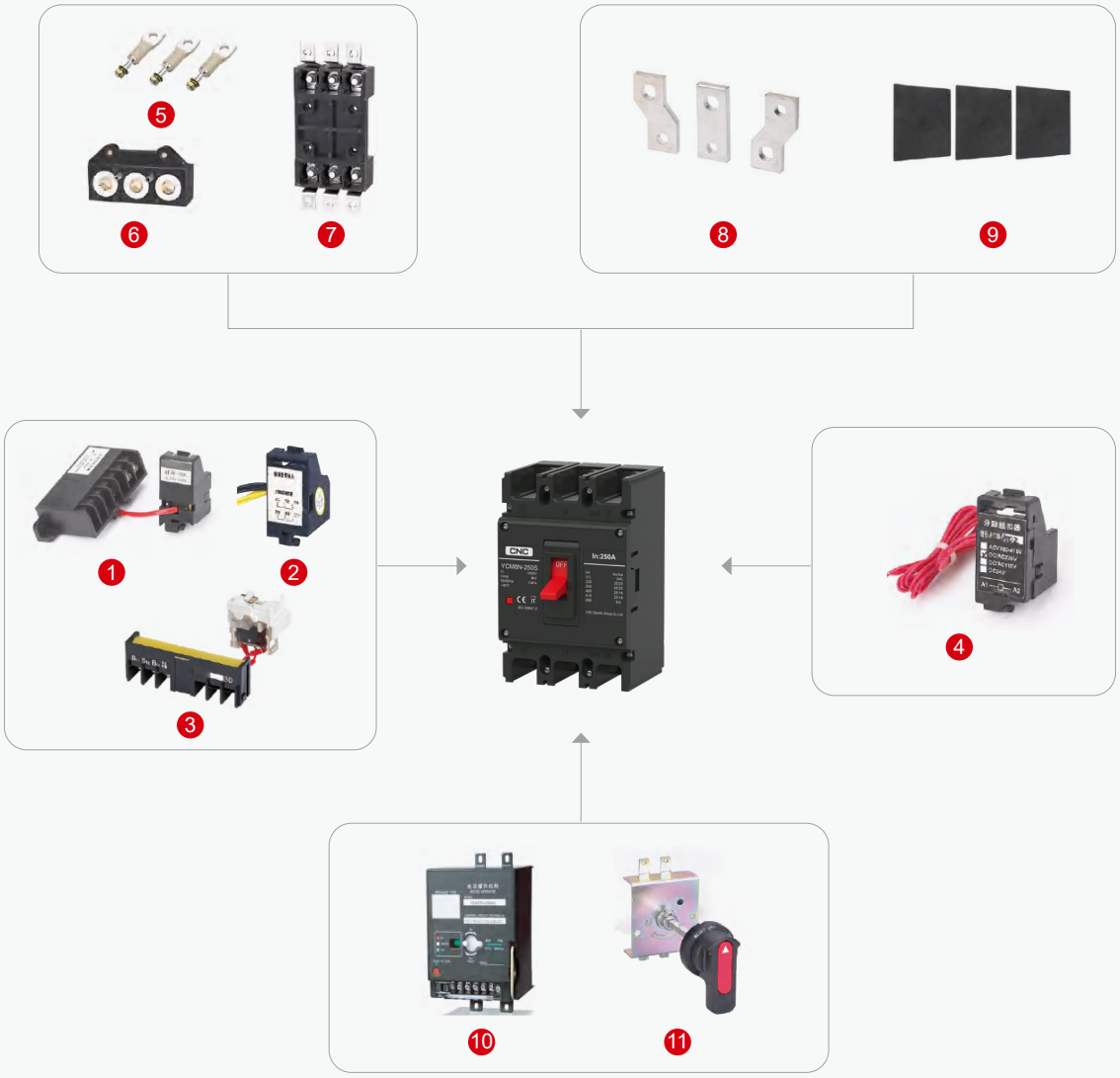

1. Undervoltage Release
2. Auxiliary Contact
3. Alarm Contact
4. Shunt Trip
5. Fixed Plate Rear Wiring
6. Plug-in Rear Wiring
7. Plug-in Front (Horizontal Wiring)
8. Extension Terminal
9. Phase Spacer
10. Electrical Operating Mechanism
11. Manual Operation

YCM8N Series MCCB

Inner accessories

Internal accessories are installed in left or right orientations. If not specified, the default configuration will be adopted.

Model		YCM8N-125	YCM8N-250	YCM8N-400/630
Code	Accessory name			
208, 308	Alarm contact(SD)			
210, 310	Shunt release(MX)			
220, 320	Auxiliary contact(OF)			
230, 330	Under-voltage release(MN)			
240, 340	Shunt auxiliary contact(MX+OF)			
250, 350	Shunt Trip + Undervoltage Release			
260, 360	Two groups auxiliary contacts(2OF)			
270, 370	Auxiliary contact UVT(OF+MN)			
218, 318	Shunt alarm contact(MX+SD)			
228, 328	Auxiliary alarm contact(OF+SD)			
238, 338	UVT alarm contact(MN+SD)			
248, 348	Shunt auxiliary alarm contact(MX+OF+SD)			
268, 368	Two groups aux alarm contact(2OF+SD)			
278, 378	Aux contact UVT alarm contact(OF+MN+SD)			

● Shunt release ○ Undervoltage release(UVT) □ Alarm switch ■ Auxiliary switch

Note:

- “200” indicates the circuit breaker body with only electromagnetic release; “300” indicates the circuit breaker body with thermal release + electromagnetic release.

YCM8N Series MCCB

Technical data

Frame Current(A)		125	250	400	630
Type		YCM8N-125S	YCM8N-250S	YCM8N-400S	YCM8N-630S
Number of poles		3	3	3	3
Products		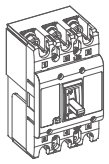	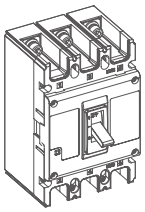	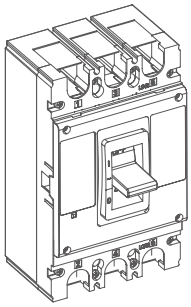	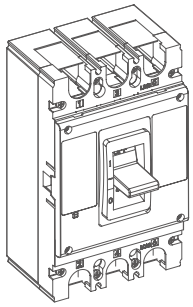
Rated current In (A)		10, 16, 20, 25, 32, 40, 50, 63, 80, 100, 125	100, 125, 140, 160, 180, 200, 225, 250	250, 315, 350, 400	400, 500, 630
Rated voltage Ue(V)		AC220/230V, 400V, 690V	AC220/230V, 400V, 690V	AC220/230V, 400V, 690V	AC220/230V, 400V, 690V
Rated insulation voltage Ui(V)		AC1000V	AC1000V	AC1000V	AC1000V
Short Circuit Breaking Capacity (kA) Icu/Ics	AC220V	18/12	35/25	50/35	50/35
	AC400V	15/10	25/18	35/25	35/25
	AC690V	4/3	6/4	8/6	8/6
Operating Circle Times	ON	600	3000	2000	2000
	OFF	900	7000	4000	4000
Dimension(mm) a-b-c-ca 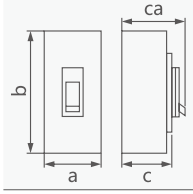	3P	75-130-66-84	106-165-78-101	150-157-112-150	150-157-112-150
Electric operating device (MD)		•	•	•	•
External drive handle		•	•	•	•
Automatic release		Thermal electromagnetic type	Thermal electromagnetic type	Thermal electromagnetic type	Thermal electromagnetic type

B

Technical Parameters

The thermal trip unit of the circuit breaker features an inverse time-delay characteristic;The magnetic trip characteristics are shown in Table 2 (for distribution use)

Table 2 Tripping Characteristics of Thermal-Magnetic and Magnetic Trip Units

Rated Tripping Current(A)	Thermal-magnetic trip unit (ambient temperature +40°C)		Operating current of the magnetic trip unit(A)
	1.05In(cold state) Non-operating time (h)	1.30In(hot state) operating time (h)	
10≤In≤63	1	1	6In±20%, 8In±20% 10In ±20%, 7In±20%
63<In≤630	2	2	

Note: The non-operating time of the motor protection circuit breaker is 2h at 1.0In; the operating current is 1.20In (hot state), and the operating time is 2h. The operating current of the electromagnetic release is 12In±20%.

YCM8N Series MCCB

Curve

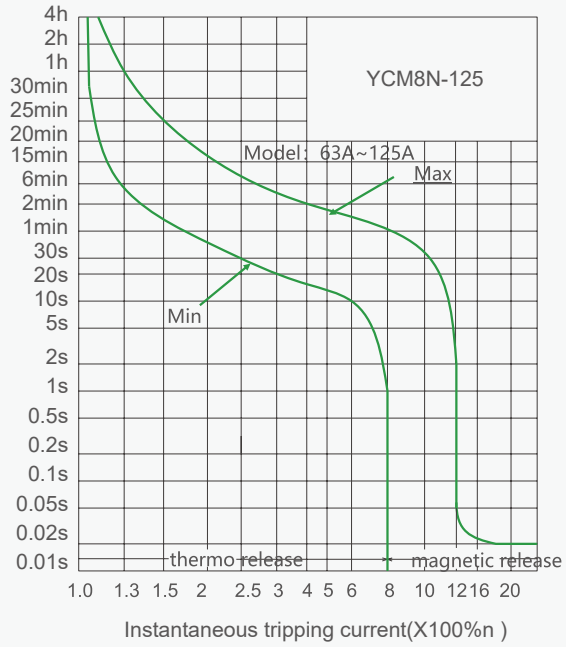

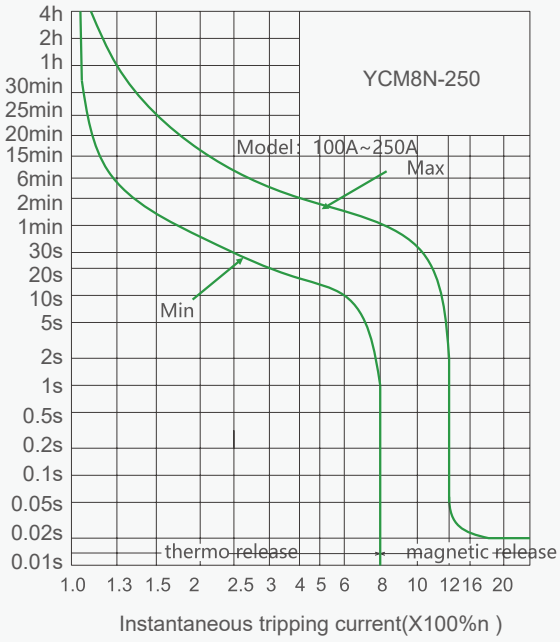

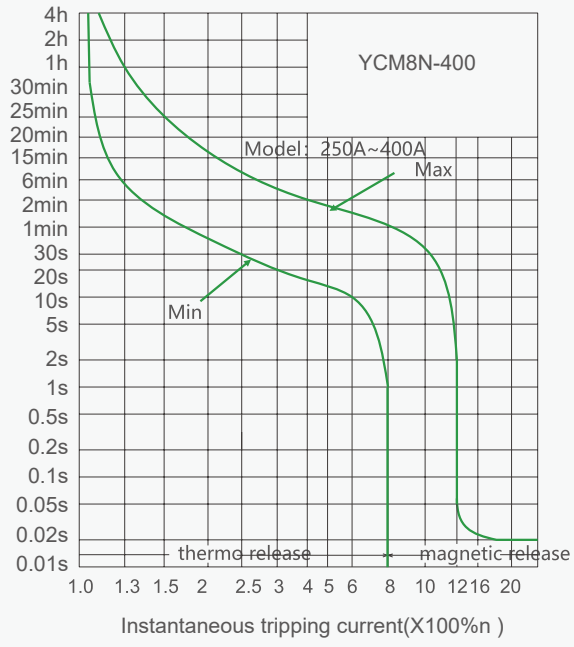

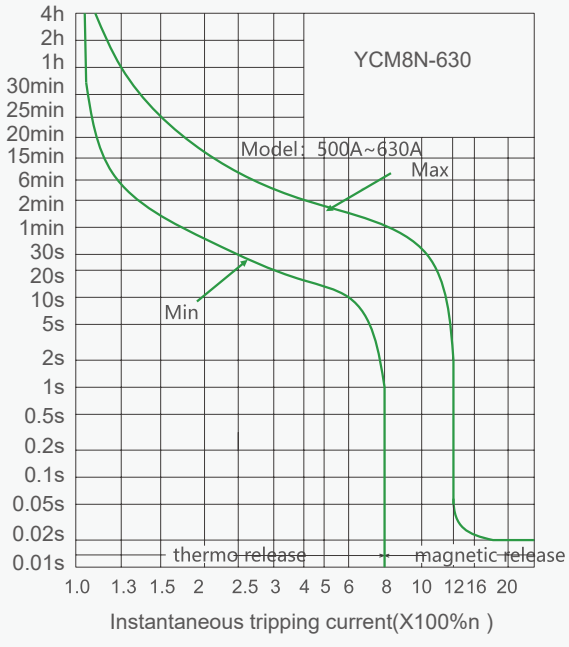

B

Altitude Derating

When the altitude is below 2000m, it will not affect the performance of the circuit breaker. When exceeding this altitude, the decrease in air insulation characteristics and cooling capacity must be considered; the following correction factors are used for installations at altitudes exceeding 2000m:

Altitude (m)	2000	2500	3000	3500	4000	4500	5000
Insulation Voltage Ui (V)	800	728	728	664	664	616	616
Impulse Withstand Voltage Uimp (kV)	8	7	7	6.5	6.5	6	6
Maximum Working Voltage Ue (V)	690	690	690	660	660	600	550
Thermal Rating In (A) at 40°C Ambient Temperature	1.0In	0.98In	0.94In	0.92In	0.88In	0.86In	0.85In

Note: In high-altitude environments, the breaking capacity needs to be derated according to the corresponding rated working voltage, generally selected between 75% and 50%, which is inversely proportional to the altitude. For details, please communicate with the technical department.

Temperature Influence Characteristics

Influence of High Temperature on Release Performance (High Temperature Derating Characteristics)

When the temperature exceeds 40°C, the overload protection will have slight changes. In the release time/current curve, the Ir setting value of the circuit breaker must be corrected according to the following coefficients I/Ir.

Model	Ambient Temperature (°C)				
	40	45	50	55	60
YCM8N-125	1	0.96	0.89	0.83	0.75
YCM8N-250	1	0.92	0.85	0.79	0.71
YCM8N-400/630	1	0.94	0.87	0.81	0.73

Mechanical Accessories



Phase Spacers

- Phase spacers can enhance the insulation performance between phase conductors and can be installed from the front slot even after the switch is installed.
- Phase spacers are standard equipment, with 4 pieces for a 3P circuit breaker.



Extension Terminals

Extension terminals are connected to the standard terminals of the circuit breaker to provide various wiring solutions in a small space:

- Straight extension terminals
- Pole pitch extension terminals

Busbars and extension terminals can be connected to the inlet or outlet end of the circuit breaker.



Handle Operating Mechanism

- The circuit breaker is operated by rotating the handle. The ergonomically designed rotating handle makes the operation of the circuit breaker more flexible.
- There are two forms of rotating handle operating mechanisms:

  Direct rotating handle (round hand operation, square hand operation)

  Extended rotating handle (round extended hand operation, square extended hand operation)
- User visual information/settings:

  Three position indications: OFF, ON, TRIP

  The circuit breaker cannot be closed when the door is open.

  The door cannot be opened when closed.

  The shaft length of the extended handle can be customized according to the distance from the back of the circuit breaker to the door.
- Hand operation installation diagram, accessory installation diagram

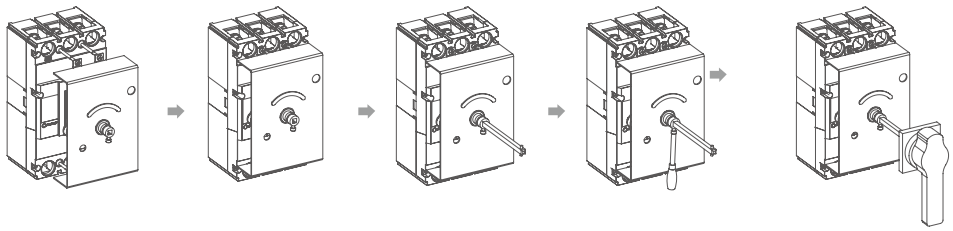

1. Align the installation direction of the hand operation.
2. Tighten the installation screws.
3. Install the extension screw.
4. Fix the screw.
5. Install the extension handle.

B

Hand operation external dimensions

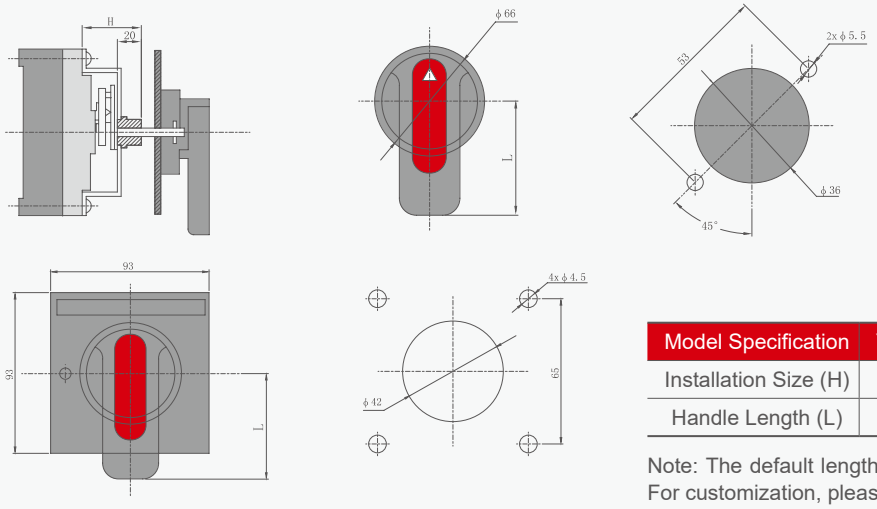

Model Specification	YCM8N-125	YCM8N-250	YCM8N-400/630
Installation Size (H)	58	57	87
Handle Length (L)	65	95	125

Note: The default length of the hand operation extension bar is 150mm. For customization, please contact the manufacturer.

CD2 Electric Operator

Electrical Characteristics and Wiring Diagram

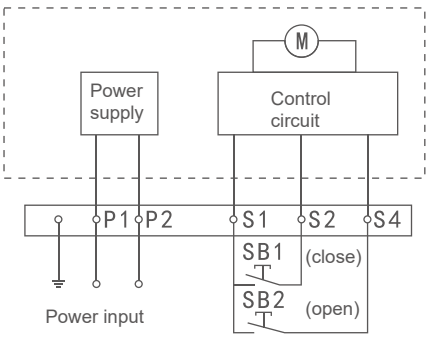



Note: The micro switch connected in series with the coil inside the K-shunt trip is a normally closed contact, which will disconnect automatically after the circuit breaker is tripped and close when closed.

P1 and P2 are external power inputs. SB1 and SB2 are operation buttons (provided by the user).

External installation dimensions

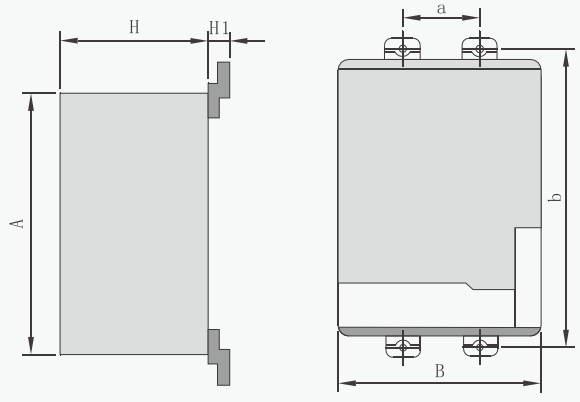

Model	A	B	H	H1	a	b
YCM8N-125	101	73	79	15	25	112
YCM8N-250	118	92	79	17.5	35	142.4
YCM8N-400/630	176	130	117	35.5	44	194

Electrical Accessories

Auxiliary Contact





- An accessory connected to the auxiliary circuit of the switching device to indicate the ON or OFF (or Trip) state of the circuit breaker.

Alarm Contact

An accessory used to indicate whether the circuit breaker is in a non-tripped (ON or OFF) or tripped (Trip) state. When the alarm contact indicates that the circuit breaker is in the Trip state, there are the following five possibilities:

- Overload or short circuit fault
- Residual current fault
- Manual test button trip
- Shunt trip action
- Line fault, undervoltage release action

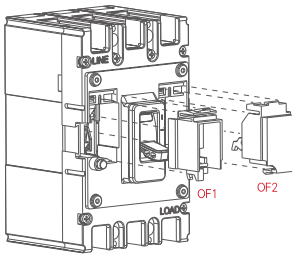

Auxiliary contact installation diagram

Electrical parameters of auxiliary alarm contact			
Conventional heating current (A)		3A	
Usage category		AC15	DC13
Working voltage 50/60Hz	AC400V	0.3A	-
	DC220V	-	0.15A

Electrical wiring diagram

Accessory Name	Closing	Opening/tripping
		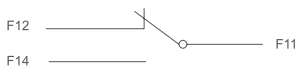

Accessory Name	Closing/opening	Tripping
	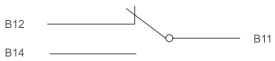	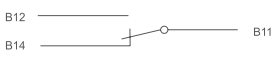

B





Shunt Trip

- The shunt trip should reliably trip the circuit breaker when the rated control power voltage U is between 70% and 110%.
- After the circuit breaker is tripped by the shunt trip, it needs to be reset on-site.

Model	Shunt coil power consumption (W)		
	AC400V	AC230V	DC24V
YCM8N-125	91.6	76.1	91,2
YCM8N-250	112	68.6	85.3
YCM8N-400/630	67	62.3	100

When the rated control voltage of the shunt trip is DC24V, the maximum length of the copper wire should meet the following requirements:

Rated Control Power Voltage Uc (DC24V) \ Wire Area	1 .5mm²	2.5mm²
100%Uc	150m	250m
85%Uc	100m	160m

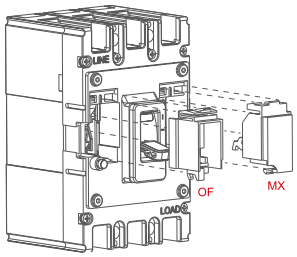

MX:Installation Diagram

If the above requirements are not met, it is recommended to design the shunt trip control circuit as follows:

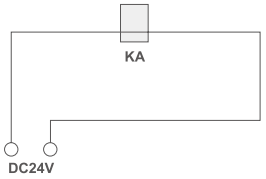

KA: DC24V intermediate relay, contact current capa

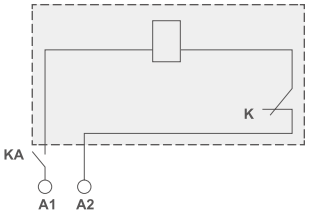

Power input



Undervoltage Release

- The undervoltage release should reliably trip the circuit breaker when the rated working voltage is between 35% and 70%.
- The undervoltage release should ensure that the circuit breaker can be closed when the rated working voltage is between 85% and 110%.
- The undervoltage release should prevent the circuit breaker from closing when the rated working voltage is lower than 35%.

Model	Undervoltage coil power consumption (W)	
	AC400V	AC230V
YCM8N-125	4	3.1
YCM8N-250	4.3	3.3
YCM8N-400/630	3.6	2.5

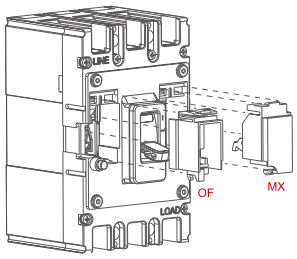

Undervoltage release installation diagram

YCM8N Series MCCB

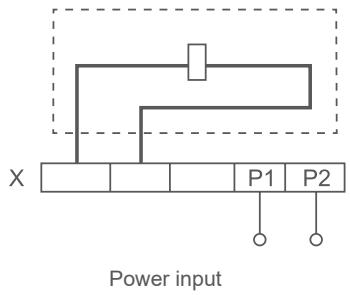

Electrical Wiring Diagram of Undervoltage Release

Electrical Wiring Diagram

Description: X - Wiring terminal block.

Note: The dashed frame indicates the wiring diagram of internal accessories of the circuit breaker.

B

Overall and mounting dimensions(mm)

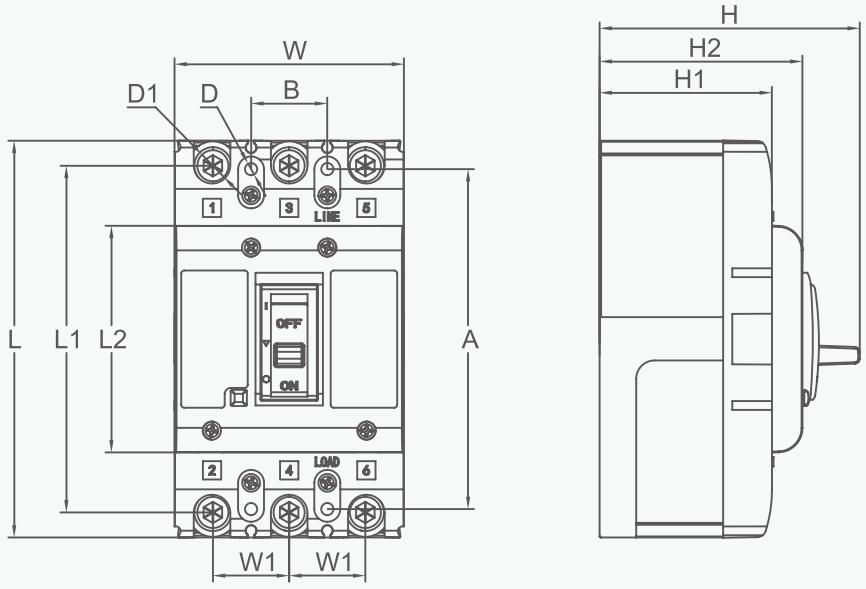

Type	Overall size (mm)											
	W	L	H	A	B	W1	L1	L2	H1	H2	D	D1
YCM8N-125	75	130	84	112	25	26	117	75	56	66	Φ4	M6
YCM8N-250	106	165	101	126	35	35	147	97	69	78	Φ5	M8
YCM8N-400/630	150	157	150	194	44	48	224	156	102	112	Φ14	M10

YCM8C External Circuit Breaker



General

YCM8C series external circuit breakers are suitable for distribution networks with AC 50Hz or 60Hz, rated insulation voltage of 1000V, rated voltage of 400V and below, and rated current of 1000A. Under normal circumstances, the circuit breaker can be used for the infrequent on-off control of the line and the infrequent start of the motor respectively.

Standard:IEC60947-2; IEC60947-1.

Operating Conditions

1. Extreme temperature range for storage and transportation: -10°C to 85°C;
2. Operating range: -10'C to 75°C;
3. Reference temperature: 55°C;
4. Atmospheric conditions: The maximum temperature is 75 'C and the maximum relative humidity is 95%;
5. External magnetic fields at the installation site must not exceed 5 times the strength of the earth's magnetic field, and the product should be kept away from strong electromagnetic interference (such as high-power motors or inverters).There should be no explosive or corrosive gases, no exposure to rain or snow, and the environment should be dry and well-ventilated;
6. Pollution level: level 3; installation category: category II.

Type designation

YCM8C - 250 S / 3 TM 125A

Model	Shell frame	Breaking capacity	Number of poles	Tripping method	Rated current
YCM8C -	250	S /	3	TM	125A
YCM8C	250(100~250) 400(250~400) 630(400~630) 800(630~800) 1000(800~1000)	Standard breaking J: With RJ45	3	TM:Thermomagnetic M:single electromagnetic	100A 125A 140A 160A 180A 200A 225A 250A 315A 400A 500A 630A 700A 800A 1000A

YCM8C External Circuit Breaker

Technical data

Frame current Inm(A)		250S	400S	630S	800S	1000S
Working voltage Ue(V)		400				
Rated insulation voltage Ui(V)		AC1000				
Rated impulse withstand voltage Uimp(KV)		8				
Number of poles (P)		3				
Rated current In(A)		100,125,140,160, 180,200,225,250	250,315,350,400	400,500,630	630,700,800	800,1000
Ultimate breaking capacity Icu (KA)	AC240V	35	50	50	65	65
	AC415V	25	35	35	40	40
Operating breaking capacity Ics (KA)	AC240V	35	50	50	65	65
	AC415V	25	25	25	40	40
Electrical life (times)		1000	1000	1000	500	500
Mechanical life (times)		7000	4000	4000	2500	2500
Operating voltage		AC230V(85%~110%)				
Wiring		Up in and down out,down in and up out				
Protection degree		IP30				
Isolation function		Yes				
Tripping type		Thermomagnetic				
Accessories		Shunt,alarm,auxiliary				
Certificate		CE				

Product feature configuration

The operation interface of the electric operating mechanism is shown in Figure 1

1. Circuit breaker status indication window
2. Mechanism lock
3. Tripping button
4. Power and control wiring ports
5. Manual and automatic switching of cover plates

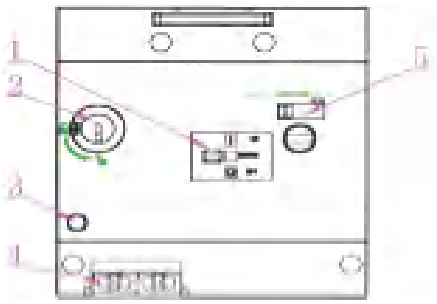

YCM8C External Circuit Breaker

Electrical control schematic

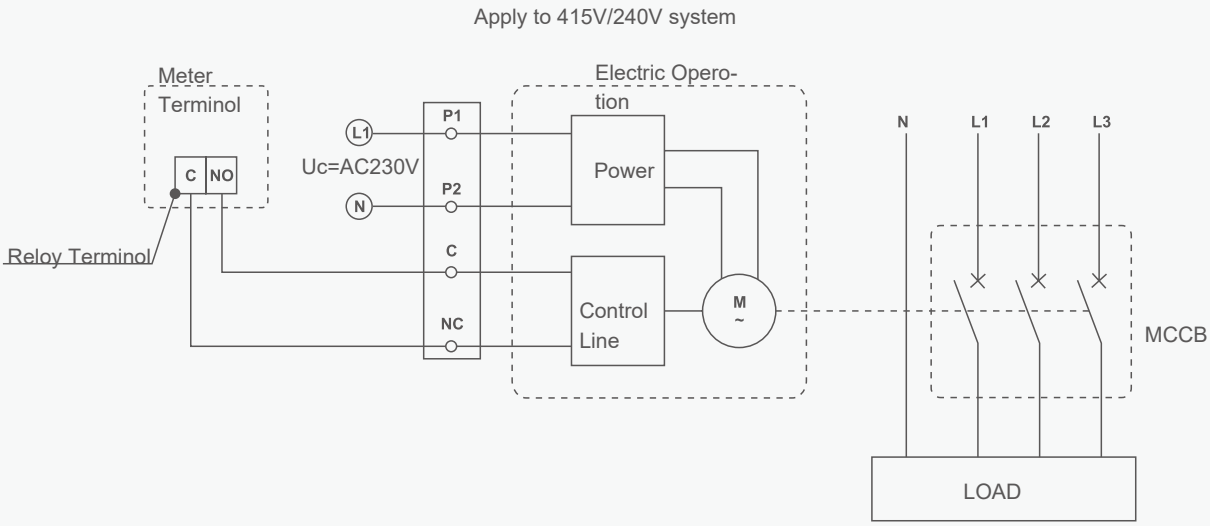

Overall and mounting dimensions

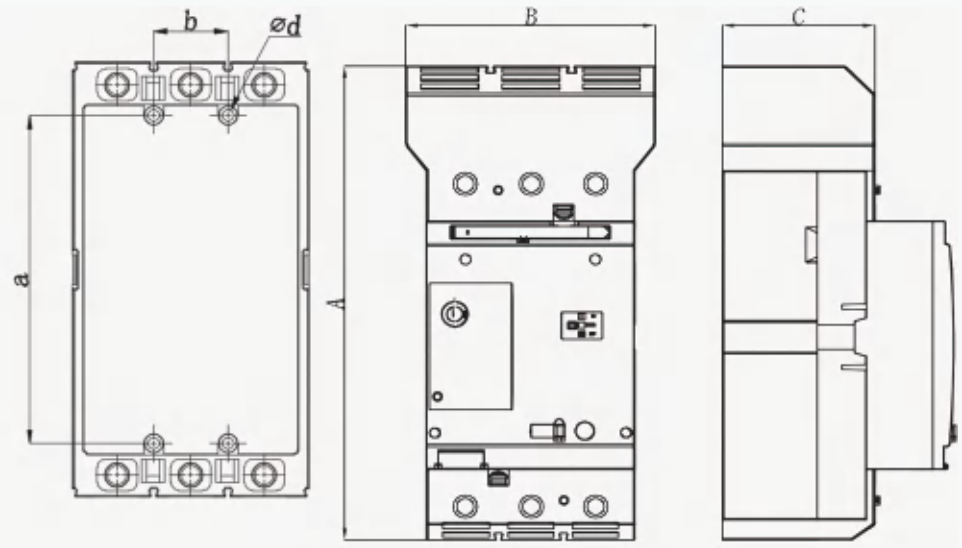

YCM8C External Circuit Breaker

Specifications	250S/3P	400/3P	630/3P	800/3P	1000/3P
L	165	257	275.5	275.5	275.5
W	105	140	210	210	210
A	35	43.5	70	70	70
B	144	230	243.5	243.5	243.5
C	24	31	45	45	45
D	21	29	30	30	30
E	22.5	30	24	26	28
F	118	160	175	175	175
a	126	194	243	243	243
b	35	44	70	70	70
Φd	4×Φ4.5	4×Φ7	4×Φ8	4×Φ8	4×Φ8

Dimensions with protective cover

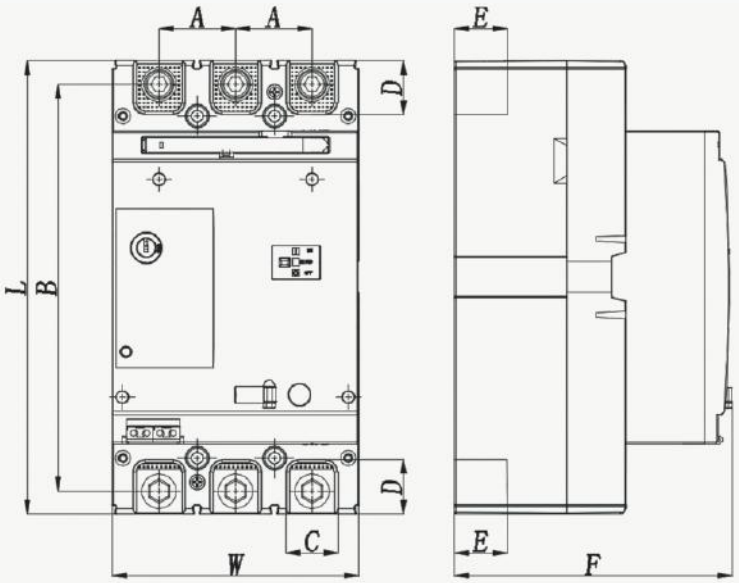

Size	250S/3P	400/3P	630/3P	800/3P	1000/3P
A	208	278	418	418	418
B	105	140	238	238	238
C	67.5	103	103	103	103

YCM8LZ Automatic Reclosing MCCB



General

The YCM8LZ Automatic Reclosing MCCB is a circuit breaker that integrates residual current relay, contactor, and molded case circuit breaker functions. It is suitable for three-phase four-wire neutral-grounded power supply and distribution systems, providing protection against grounding faults, undervoltage, overcurrent, short circuits, instantaneous and residual currents in circuits or electrical equipment. It can also prevent electrical fires and equipment damage caused by grounding faults, as well as provide indirect contact protection against electric shock hazards to individuals.

Type designation

YCM8LZ - 250 S / 3P+N LED

Model		Shell frame	Breaking capacity		Number of poles	Display type
YCM8LZ	-	250	S	/	3P+N	LED
YCM8LZ		250(100~250) 400(250~400) 630(400~630) 800(630~800)	Standard breaking		3	LED

Operating Conditions

1. The ambient temperature ranges from -5°C to +40°C, with an altitude not exceeding 2000 meters.
2. Relative air humidity: The monthly average humidity in the wettest month does not exceed 25°C, and the maximum relative humidity for that month does not exceed 90%, taking into account condensation occurring on the product surface due to temperature variations.
3. External magnetic fields at the installation site must not exceed 5 times the strength of the earth's magnetic field, and the product should be kept away from strong electromagnetic interference (such as high-power motors or inverters). There should be no explosive or corrosive gases, no exposure to rain or snow, and the environment should be dry and well-ventilated;
4. Pollution level: level 3; installation category: category III.

YCM8LZ Automatic Reclosing MCCB

Technical data

Type	-	YCM8LZ-250	YCM8LZ-400	YCM8LZ-630	YCM8LZ-800
Rated current In(A) adjustable	-	100A-250A	250-400A	400A-630A	630A-800A
Poles	-	3P+N			
Working voltage Ue(V)		AC400V			
Rated insulation voltage Ui(V)		AC1000V			
Rated impulse withstand voltage Uimp(KV)		8kV			
Arcing distance	mm	≤50mm		≤100mm	
Limit short-circuit breaking capacity Icu (KA)	KA	35	50	50	50
Working short-circuit breaking capacity Ics (KA)	KA	25	35	35	35
Rated residual short-circuit making (breaking) capacity (KA)	KA	25%Icu			
Type(wave form of the earth leakage sensed)	-	AC			
Product applicable category		Category B			
Rated short-time withstand current	s	5KA/1s		8KA/1s	
Rated residual current operation	-	50/100/200/300/500/800mA/1000mA/2000mA Auto Can be set as needed (optional)			
Delay characteristics	-	S type (adjustable)			
Ultimate non-drive time	s	0.06			
Breaking time	s	< 0.3/0.5			
Automatic reclosing time	s	20-60s			

Product feature configuration

TEST: The switch performs residual current trip testing function under normal operating conditions.

UP: In setting mode, the switch scrolls up on the menu or increases data. In normal operating mode, press this button for 2-3 seconds to enter the remote communication address setting mode.

SET: In any state, pressing this button enters the main menu interface of the controller.

ENTER: In setting mode, pressing this button selects a menu item or stores set data; in normal operating mode, press this button for 4-5 seconds to enter the automatic correction interface for current, voltage, and residual current (this function is only used for automatic calibration coefficient adjustment during product production and debugging!).



Close: The switch is in the open state, the main circuit voltage is normal, and pressing this button achieves the function of closing the switch.

Break: The switch is in the closed state, and pressing this button achieves the function of opening the switch.

BACK: In setting mode, pressing this button exits the setting menu operation; also used to unlock and return to normal operating mode when the switch is in a locked state; also used to abandon data storage in setting mode; also used to return to the previous menu level in submenus.

DOWN: In setting mode, the switch scrolls down on the menu or decreases data.

YCM8LZ Automatic Reclosing MCCB

Product Features Table

Functions	Reclosing function	Auto-close on power-up	●
		Automatic reclosing for residual current protection	●
		Automatic reclosing for voltage protection	●
		Residual current automatic reclosing interlocking	●
	Residual current protection	Residual current protection	●
		Residual current automatic tracking protection	-
		Residual current self-test	●
		Residual current alarm output	○
		Residual current sudden change protection	○
		Residual current special waveform recognition	○
	Current protection	Overload long delay protection	●
		Short circuit short delay protection	●
		Short circuit instantaneous protection	●
		Overload pre-alarm	●
	Voltage protection	Undervoltage and overvoltage protection	●
		Phase loss protection	●
		Power supply side open circuit protection	●
		Power supply side under voltage trip	●
	External DI/O port function	Communication auxiliary power input	●
		Two DI/O programmable control inputs	●
		One passive contact output	○
	Fault record	10 trip fault storage	●
		512 residual current operation records can be stored	-
		30-day voltage, current, leakage maximum/minimum value record	●
		Daily recording of 96-point residual current curve	●
		10 protector self-test event records	●
		80 protection function trip/close event records	●
		10 circuit breaker position change event records	●
		10 alarm event records	●
		10 High voltage loss/restoration event records	●
	HPLC communication	Equipped with an embedded HPLC broadband power line carrier chip, it can communicate in real-time with TTUs, fusion terminals, or concentrators, enabling the uploading of various perception events and edge computing data to achieve real-time IoT at key points in the power grid. It has the same communication data transmission and reception functions as RS-485 and infrared communication interfaces.	○
	RS-485 communication	1 isolated RS-485 communication interface, which by default supports the DL/T 645-2007 protocol and optionally customizable Modbus-RTU protocol, enabling the implementation of "four-remote" communication functions for switches locally or remotely. By configuring an external display header, all product functions can be synchronized and operated on the distribution cabinet panel. It has the same communication data transmission and reception functions as HPLC and the infrared communication interface.	●
	Infrared communication	1 infrared transmission and reception communication interface, realizing on-site wireless communication and maintenance functions for the product. It has the same communication data transmission and reception functions as HPLC and RS-485 interfaces.	○

YCM8LZ Automatic Reclosing MCCB

Functions	GPS and Beidou satellite positioning	The product can be optionally equipped with GPS and Beidou positioning function modules according to user needs, achieving real-time positioning of product location information. (Customization option supported)	○
	Residual current harmonic elimination	The product features real-time sampling and harmonic elimination of residual current, with a built-in high-precision signal sampling circuit. Combined with software algorithms, it achieves harmonic analysis and elimination of residual current waveforms, preventing false triggers caused by real-time residual current sampling errors due to equipment with variable frequency drives or harmonic interference in the load. This enhances the accuracy and stability of the product's residual current protection.	●
	AC sampling	Equipped with a high-precision metering chip, it enables the measurement of electrical parameters such as voltage, current, power, power factor, voltage frequency, and voltage-current harmonic content. Voltage range: 0.5Ue to 1.5Ue, ±0.5%; current range: 0.002In to 0.01In, ±0.75%, 0.01In to 1.15In, ±0.5%; frequency measurement range: 45Hz to 55Hz, ±0.1Hz; power factor measurement range: 0.5 to 1.0, ±0.005. The active energy metering accuracy is Class 0.5s.	●
	Meter box management	If the equipment is installed inside the meter box, real-time management of the meters inside the box can be achieved, including automatic meter detection, reporting of meter additions and removals, theft of electricity alarm for the meter box, power outage alarm before the meter, circuit breaker trip alarm after the meter, energy meter measurement error diagnosis, loop impedance analysis, etc. (Requires selection of corresponding HPLC module)	○
	Automatic recognition of substation topology	Combined with TTUs, fusion terminals, and concentrators, it can automatically achieve real-time substation topology identification with an identification accuracy of up to 99%, including household transformer relationship identification, phase identification, and branch identification. (Requires selection of corresponding HPLC module and topology module)	○
	Accurate verification and integration of operation and distribution data	It can achieve precise identification of substation archives from bottom to top without needing to download archives to concentrators or fusion terminals, enabling accurate identification of substation archives.	○
	Power outage event reporting	It can achieve power outage and disconnection of meter and post-switch: configuration is required (HPLC module can only monitor meter disconnection but not post-switch disconnection), meter box disconnection, disconnection of various levels of branches, substation disconnection, and other levels of power outage events for real-time reporting. The reported data includes the geographical location information of the outage nodes, facilitating quick navigation for repair personnel to the location of the incident.	○
	Hierarchical line loss accounting	It can achieve multi-level line loss calculation between the main meter and branches, branches and sub-branches, sub-branches and meter boxes, and meter boxes and individual meters, refining the distribution line losses to branch line losses and meter box line losses at the substation level.	○
	Real-time theft of electricity alert	By utilizing built-in sensors and edge computing, it can instantly detect meter-box-level electricity theft, branch-level electricity theft, and substation-level electricity theft, accurately pinpointing the areas of theft and promptly reporting them to the backend system.	○
	Automatic fault diagnosis	By using built-in temperature measurement points, alarms are triggered when the terminal temperatures are too high. Through edge computing, issues with equipment in which branch of the substation can be identified in real-time. Additionally, the meters inside the meter box can be monitored in real-time for accuracy deviations.	●
	Digital control	Utilizing a microprocessor-based intelligent digital control circuit, it conducts real-time signal processing and intelligent control, enabling remote signaling, remote measurement, remote adjustment, and infrared remote control functions.	●
	Circuit protection	It has overload long delay, short-circuit short delay, short-circuit instantaneous, overvoltage, undervoltage, phase loss, power supply side zero crossing, leakage, over-temperature at the input/output terminals, voltage three-phase imbalance, current three-phase imbalance protection, etc., with event-based protection/alarm functions and corresponding event logging.	●
	Remote tripping and closing	Support remote communication for remote control switch on/off operation.	●
	Clock function	It has overload long delay, short-circuit short delay, short-circuit instantaneous, overvoltage, undervoltage, phase loss, power supply side zero crossing, leakage, over-temperature at the input/output terminals, voltage three-phase imbalance, current three-phase imbalance protection, etc., with event-based protection/alarm functions and corresponding event logging.	●

YCM8LZ Automatic Reclosing MCCB

Functions	Alarm function	To facilitate line inspection and enhance operational efficiency, the product supports online residual current alarms and withdrawal settings, enabling real-time detection and analysis of residual current changes in the circuit. The LCD display interface can show the current residual current magnitude and indicate whether the residual current is in operation status.	●
	Residual current automatic tracking	Supports real-time monitoring of residual current online, automatically adjusting the residual current protection threshold based on the operating status of the line over a period of time. This ensures the real-time effectiveness of residual current protection, reducing the occurrence of false triggers in switches caused by inherent leakage in the line due to weather and seasonal changes.	●
	Residual current automatic reclosing	Supports automatic reclosing and manual reclosing for residual current, allowing for the free switching between the two modes of operation.	●
	Self-recovery over-voltage and under-voltage protection	Support for enabling and disabling the automatic reclosing function for voltage protection, adapting to the automatic reclosing function requirements for voltage protection in different usage scenarios, improving the effectiveness of load voltage protection and power supply stability. The automatic reclosing function of voltage protection is only used when overvoltage, undervoltage, or phase loss faults occur on the power supply side. After the fault is cleared and the voltage returns to the normal operating range, the product automatically implements the reclosing function. The product does not have automatic reclosing function for power supply side zero-crossing faults.	●
	Temperature detection	It can detect the temperature of the incoming lines A, B, C, N, and the outgoing lines A, B, C, N, as well as the internal circuit board temperature of the circuit breaker, with an accuracy of ±1°C. It also provides over-temperature protection with trip function.	●
	External input and output ports	It has 1 channel of active energy pulse output, 1 channel of reactive energy pulse output, 1 channel of second pulse output, 1 group of RS-485 communication interface, 2 channels of programmable input control interfaces (supporting external hard remote control switch on/off, prepayment, knife gate interlocking functions), 1 group of normally open and normally closed switch status output interfaces (used for external switch status indication or other fire linkage expansion functions), 1 group of DC12V output interfaces (used for configuring external display headers, can also be optionally configured as an external DC12V input function for connecting to backup power supply after a power outage to support communication, product disconnection, and other IoT control functions).	●
	Harmonic analysis	It has voltage and current 31st harmonic analysis function, which can upload real-time voltage and current harmonic content of the line through communication.	○
	Photovoltaic anti-islanding	By monitoring real-time voltage and current operating states, the product's photovoltaic anti-islanding protection function is achieved through software algorithms.	●
	Seamless switchover to backup power supply	It has a seamless switchover to backup power supply after a power outage, ensuring that within 30 to 60 seconds after a power outage, it achieves metering data storage, recording, and communication of relevant status events.	●

Note: The symbol "●" indicates that the function is available; the symbol "○" indicates that the function is optional; the symbol "-" indicates that the function is not available.

YCM8LZ Automatic Reclosing MCCB

Overall and mounting dimensions

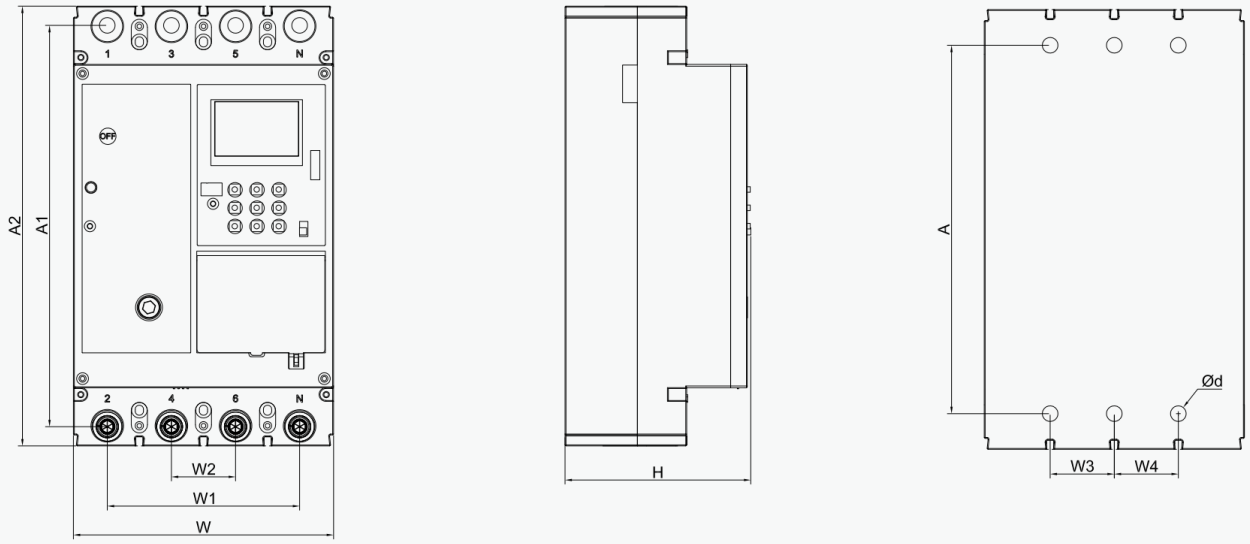

Type	YCM8LZ-250	YCM8LZ-400	YCM8LZ-630	YCM8LZ-800
A	201	272	272	243
A1	218	303	303	243.5
A2	240	336	336	275.5
B	12.5	12.5	12.5	12.5
B1	22	38	38	36.5
B2	39.5	100	100	64
B3	40	40	40	40
W	142	198	198	280
W1	105	144	144	210
W2	35	48	48	70
W3	35	48	48	70
W4	35	48	48	70
H	100	157	157	172.8
d	Φ4.5	Φ8	Φ8	Φ8

YCM8EC Intelligent Four-remote Circuit Breaker



General

The rated insulation voltage of YCM8EC series intelligent four-remote circuit breaker is 1000V, which is suitable for the distribution network of AC 50/60Hz, rated voltage 400V and below, rated current to 1250A. Under normal circumstances, circuit breakers can be used for infrequent switching of circuits and infrequent starting of motors respectively. The intelligent four-remote circuit breaker provides protection against overload and short circuit conditions in the circuit. It also offers protection against overvoltage, undervoltage, and phase loss, while being capable of measuring various parameters such as current, voltage, frequency, active power, reactive power, apparent power, power factor, energy, harmonics, and more.

Standards: IEC60947-2

Type designation

YCM8EC - 250 / 3 50A 6.0E

Model		Frame current		Number of poles	Rated current	Function
YCM8EC	-	250	/	3	50-125A	6.1E
YCM8EC		250 400 630 800 1250		3	50-125A 100-250A 160-400A 252-630A 320-800A 400-1000A 500-1250A	6.1E

Operating Conditions

1. The ambient temperature is between-5°C ~ + 40°C, and the altitude is not more than 2000 meters.
2. Atmospheric conditions: The highest temperature is 40°C, the relative humidity of air is not more than 50%,and higher relative humidity can be allowed at lower temperature, for example, 90% at 20°C. Special measures should be taken for condensation occasionally generated due to temperature changes.
3. The external magnetic field of the installation site shall not exceed 5 times of the geo-magnetic field in any direction, and avoid large electromagnetic interference (such as high-power motor or frequency converter) as far as possible near the product, without explosive and corrosive gas, rain and snow invasion, dry and ventilated.
4. Pollution degree: Degree 3; Installation category: III.

Features

1. It features four-remote functionality, allowing remote monitoring, remote signaling, re-mote control, and remote adjustment through PC-based software.
2. The circuit breaker is compact in size, easy to install, and operates with stability.
3. It provides intuitive indications for opening, closing, and tripping, and can also be manu-ally operated.

YCM8EC Intelligent Four-remote Circuit Breaker

Features of intelligent protection controller:

Table 1: Features

Specifications and features

Class	Description		6.1E
Display mode	LCD + LED indicator light		Yes
Interface Operations	Key		Yes
Protection	Current protection	Overload long delay protection (can be disabled)	Yes
		Short circuit short delay protection (can be disabled)	Yes
		Short circuit instantaneous protection (can be disabled)	Yes
	Voltage protection	Undervoltage and overvoltage protection (can be disabled)	Yes
		Phase loss protection (can be disabled)	Yes
		Internal temperature detection function (optional)	Optional
	Communication function	RS-485 Interface Supports	Yes
		RS-485 Modbus-RTU communication protocol	Yes
		Mechanical interlock control function for closing	Yes
	Event Records (only for Jiangsu protocol)	10 fault trip event records (more than 10 records can be customized)(Modubs protocol)	Yes
		Records of 80 protective functions tripping and resetting	Yes
		Records of 10 brake position change events	Yes
		10 alert events	Yes
		10 high voltage loss records	Yes
		Recording of date and time when Daily maximum/minimum voltage and current occur within 31 Days	Yes
	Time function	Real-time clock function	Yes
	Measurement function	Electric current	Yes
		Voltage	Yes
		Active Power	Yes
		Reactive power	Yes
		Apparent Power	Yes
		Power factor	Yes
		Voltage harmonic 1-31 times	Yes
		Current harmonic 1-31 times	Yes
		Frequencyy	Yes
	Four-remote communication	It can realize remote communication, telemetry, remote adjustment and remote control functions.	Yes

YCM8EC Intelligent Four-remote Circuit Breaker

Technical data

Intelligent four-remote circuit breaker		YCM8EC-250	YCM8EC -400	YCM8EC -630	YCM8EC -800	YCM8EC -1250
Shell frame current rating In		50A-125A	160A-400A	252A-630A	630A(252-630A)	1000A(400-1000A)
		100A-250A			800A(320-800A)	1250A(500-1250A)
Number of Poles		3P	3P	3P	3P	3P
Rated operating voltage Ue(V),AC		AC400V	AC400V	AC400V	AC400V	AC400V
Rated insulation voltage Ui(V)		1000V	1000V	1000V	1000V	1000V
Rated impact withstand voltage Uimp(kV)		8kV	8kV	8kV	8kV	8kV
Rated limit short circuit breaking capacity Icu(kA)	AC400V	35kA	50kA	50kA	50kA	50kA
Rated operating short circuit breaking capacity Ics(kA)	AC400V	25kA	35A	35A	35A	35A
Rated short-time withstand current Icw(kA)		10kA/1s	10kA/1s	10kA/1s	20kA/1s	20kA/1s
Selective category		Class B	Class B	Class B	Class B	Class B
Types of overcurrent trip devices		Electronic	Electronic	Electronic	Electronic	Electronic

Overall and mounting dimensions

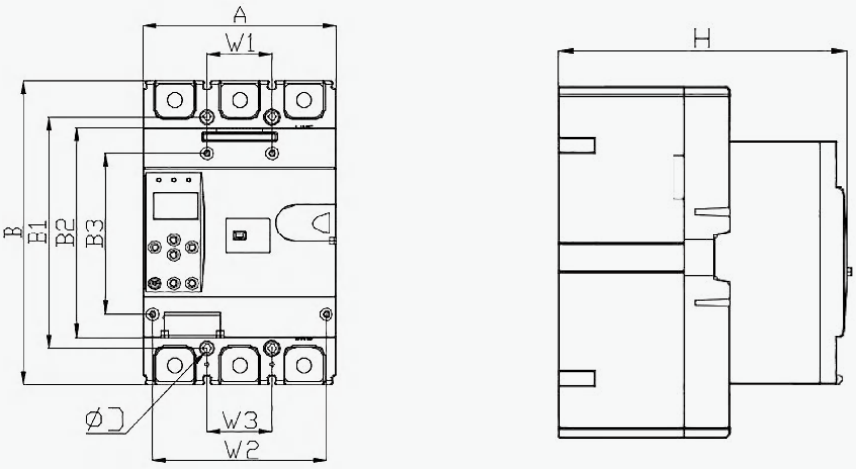

Model / Size (mm)	YCM8EC-250	YCM8EC -400	YCM8EC -630	YCM8EC -800	YCM8EC -1250
	3P	3P	3P	3P	3P
H	136	160	160	172	172
A	105	140	140	210	210
B	165	257	257	275.5	275.5
B1	126	194	194	243	243
B2	114	177	177	174	174
B3	87.5	123.5	123.5	124	124
W1	35	87	87	151	151
W2	94.5	128.5	128.5	199	199
W3	35	44	44	70	70
D	4*Φ4.5	4*Φ7	4*Φ7	4*Φ8	4*Φ8

YCM8EC Intelligent Four-remote Circuit Breaker

The ambient temperature of the circuit breaker exceeds + 40°C,derating due to current required for heating

Model \ Ambient temperature	+ 40°C	+45°C	+ 50°C	+ 55°C	+ 60°C
YCM8EC-250	1In	1In	0.96In	0.88In	0.78In
YCM8EC -400	1In	1In	0.95In	0.88In	0.78In
YCM8EC -630	1In	1In	0.95In	0.88In	0.78In
YCM8EC-800	1In	0.97In	0.92In	0.80In	0.72In
YCM8EC -1250	1In	0.97In	0.92In	0.80In	0.72In

High altitude derating

If the altitude exceeds the applicable working environment by 2000m, the electrical performance of the circuit breaker can be corrected by referring to the table below.

Altitude (m)	2000	2500	3000	4000	4500	5000
Power frequency withstand voltage (V)	2500	2500	2250	1950	1775	1625
Insulation withstand voltage (V)	1000	1000	900	780	710	650
Maximum operating voltage (V)	400	400	350	312	284	260
Working current correction factor	1	1	0.98	0.95	0.92	0.9

YCW1 Air Circuit Breaker



General

YCW1-1000 series intelligent air circuit breakers (hereinafter called ACB) are applied for the network circuit of AC 50Hz, rated voltage 400V,690V and rated current up to 1000A, mainly used for distributing energy and protecting the circuit and power supply device against short-circuit, undervoltage,single-phase ground fault etc. The ACB have intelligent protection function and the key parts adopt intelligent release.The release can make the accurate selective protection, which can avoid cutting off the power and improve the reliability of power supply.

Standard: IEC60947-2.

Type designation

YC W 1 - □/□

- Pole number(3 poles can be omitted)
- Rated current in scope of frame current
- Design sequence number
- Air circuit breaker
- Company code

Category
Installation: Fixed type, draw out type.
Operation: Motor-driven, hand.

Technical data

Type		YCW1-1000				
Rated short circuit breaking capacity		Icu=42kA 400V Ics=Icw/1s=30kA 400V				
		Icu=25kA 690V Ics=Icw/1s=20kA 690V				
Rated current In(A)		200	400	630	800	1000
Pole		3P, 4P				
Rated operation voltage Ue(V)		400				
Rated insulation voltage Ui(V)		690				
N pole max continuous current In(A)		100%In				
Breaking time (ms)		23~32				
Control unit	Standard (M)	•	•	•	•	•
	Multi-function (H)	•	•	•	•	•
Operation life	Electrical	1000				
	Mechanical	maintenance-free 3000				
		maintenance 10000				
Connection mode		Horizontal, vertical				
Weight	3P/4P draw out type	38/55				
	3P/4P fixed type	22/26.5				

YCW1 Air Circuit Breaker

Intelligent controller protection characteristic

Definite setting and error for Intelligent Controller

Long time-delay	Short time-delay		Instantaneous		Earthing fault	
Ir1	Ir2	Error	Ir3	Error	Ir3	Error
(0.4~1)In	(1.5~15)In	±10%	1In~30kA	±15%	(0.2~1)In	±10%
(0.4~1)In	☆(2~10)In	±10%	☆(5~20)In	±15%	☆(0.2~0.8)In	±10%

Note: L type intelligent controller setting with ☆

Over-current and earthing fault characteristic curve figure

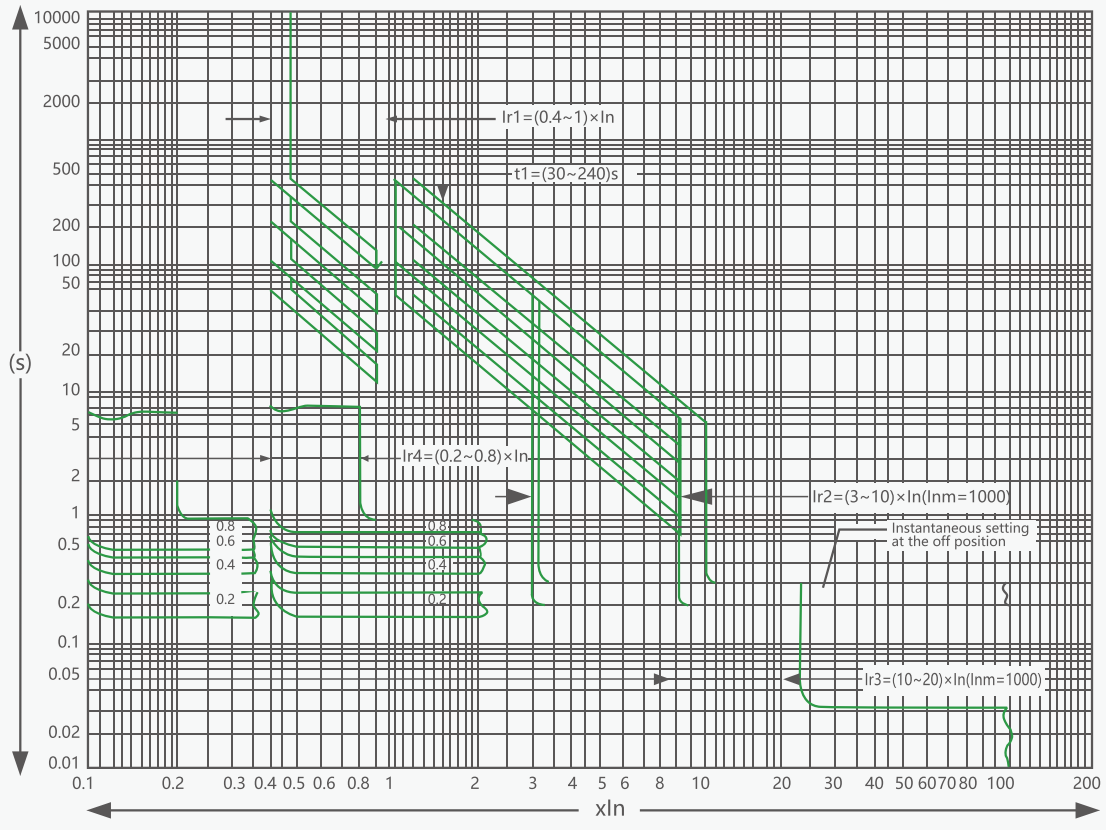

B

Secondary circuit wiring

The circuit breaker has 40pcs terminal connector, please refer to picture1, picture2, picture3.

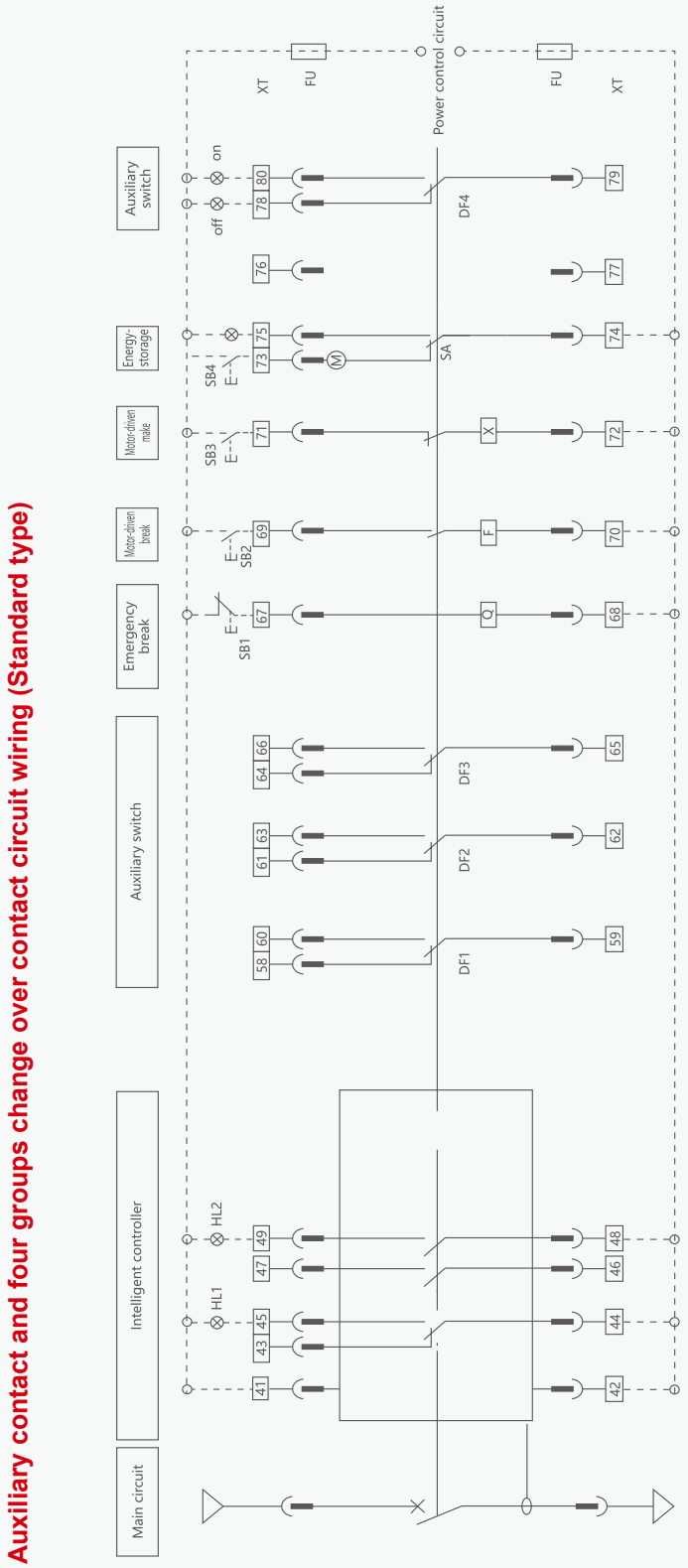

HL1: Failure indicator
HL2: Close indicator
SB1-Under-voltage button(if no need, please short circuit)
SB2-Shunt button (self-prepared by user)
SB3-Close button (self-prepared by user)
SB4-Energy storage (self-prepared by user)
Q-Under-voltage (instantaneous or delayed) release
F-Shunt releas

X-Closing electromagnet
M-Energy storage motor
SA-Motor limit switch
XT-Terminal connector
Indicator (self-prepared by user)
FU-Fuse
DF1-DF4: Auxiliary switch
41,42: Power input

43,44,45: Fault trip contact output (44 common terminal)
46,47 Normal open contact
48,49 Making indicator (Normal open contact)
67,68 Under-voltage release
69,70 Shunt release
71,72 Closing electromagnet
73,74,75 Energy storage motor
58-66,78-80: Auxiliary contact

73-can be directly connected to power(automatic pre-storing energy), alternatively connect power after connecting NO button(manul-controlled pre-storing energy).
Note: If control voltage of Q,F,X,M is different from each other, they can be connected to different power.

Picture 1 YCW1-1000 Intelligent Air circuit breaker Secondary circuit wiring

B

Auxiliary contact and six groups change over contact circuit wiring (Special type)

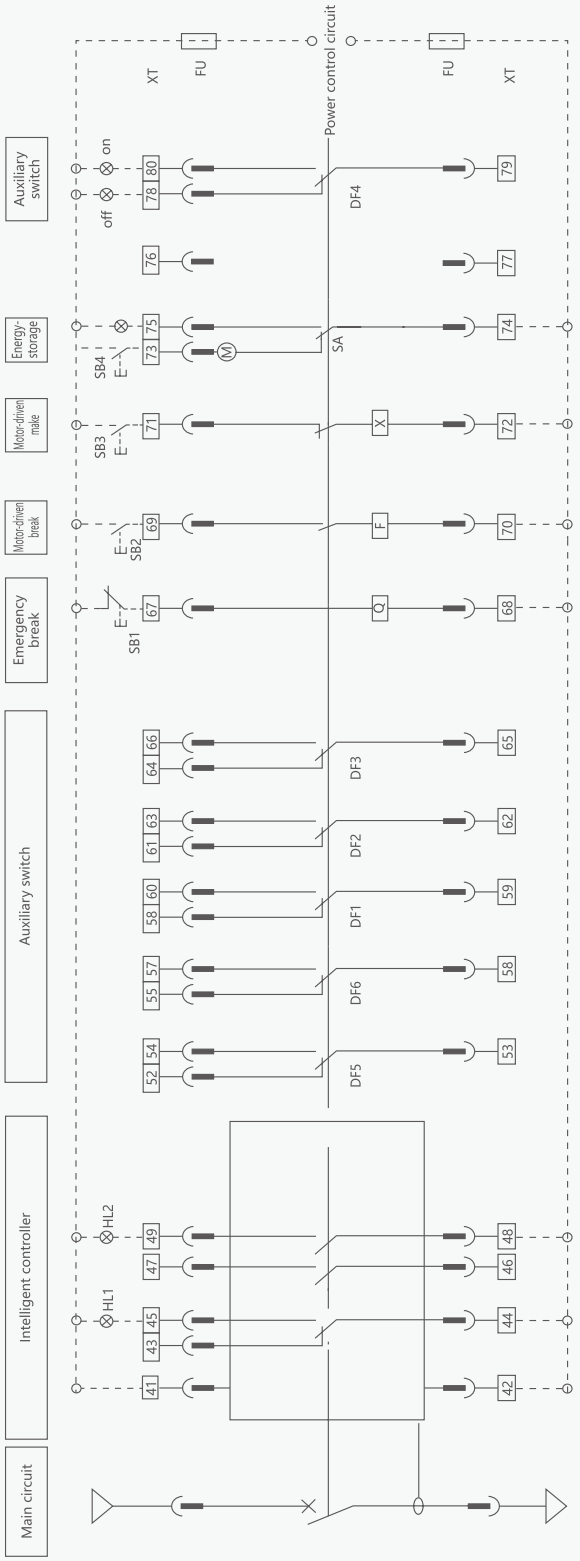

HL1:Failure indicator
HL2:Close indicator
SB1-Under-voltage button (if no need, please short circuit)
SB2-Shunt button (self-prepared by user)
SB3-Close button (elf-prepared by user)
SB4-Energy storage (self-prepared by user)
Q-Under-voltage (instantaneous or delayed) release
F-Shunt release
X-Closing electromagnet
M-Energy storage motor
SA-Motor limit switch
XT-Terminal connector
Indicator (self-prepared by user)
FU-Fuse
DF1-DF4: Auxiliary switch
41,42: Power input
43,44,45: Fault trip contact output (44 common terminal)
46,47 Normal open contact
48,49 Making indicator (Normal open contact)
67,68 Under-voltage release
69,70 Shunt release
71,72 Closing electromagnet
73,74,75 Energy storage motor
58-66,78-80: Auxiliary contact

73-can be directly connected to power (automatic pre-storing energy), alternatively connect power after connecting NO button(manul-controlled pre-storing energy).
Note:If control voltage of Q,F,X,M is different from each other, they can be connected to different power.

Picture 2 YCW1-1000 Intelligent Air circuit breaker Secondary circuit wiring

H Type Intelligent circuit wiring

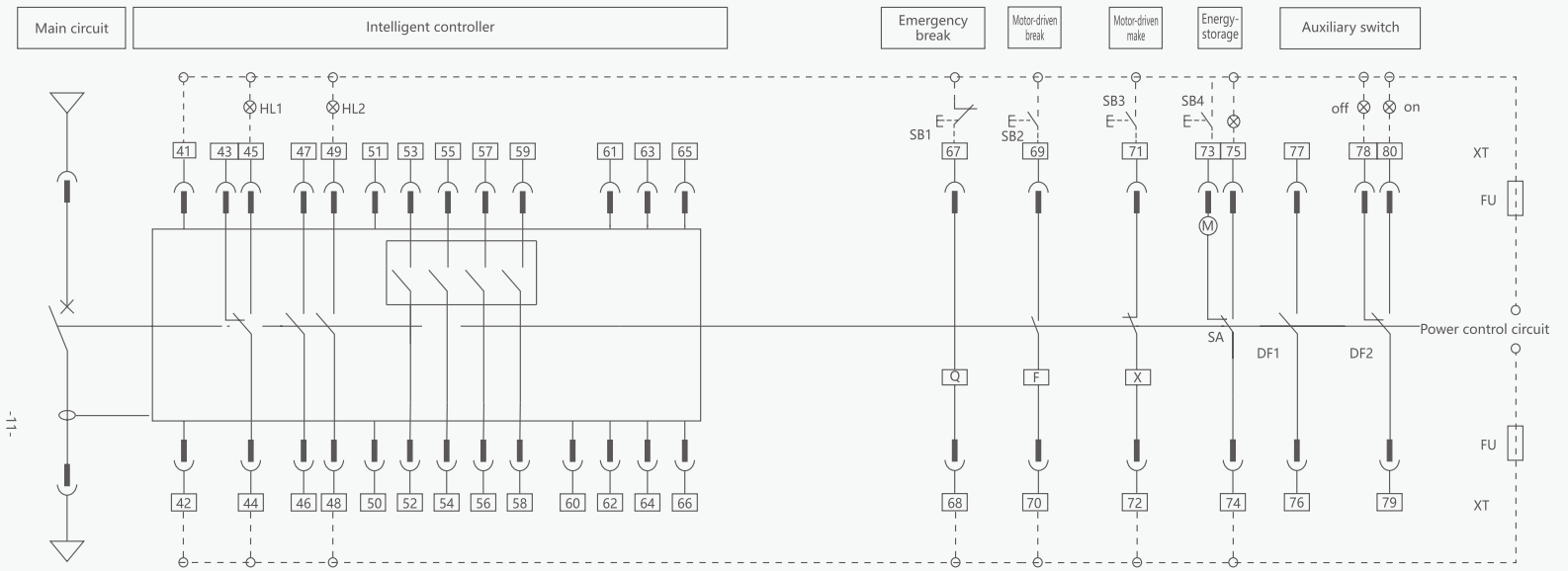

HL1:Failure indicator
HL2:Close indicator
SB1-Under-voltage button (if no need, please short circuit)
SB2-Shunt button (self-prepared by user)
SB3-Close button (self-prepared by user)
SB4-Energy storage (self-prepared by user)
Q-Under-voltage (instantaneous or delayed) release
F-Shunt release
X-Closing electromagnet
M-Energy storage motor
SA-Motor limit switch

XT-Terminal connector
Indicator (self-prepared by user)
FU-Fuse
DF1-DF4: Auxiliary switch
41,42: Power input
4344,45: Fault trip contact output(44 common terminal)
46,47 Normal open contact
48,49 Making indicator (Normal open contact)
50,51: Communication output
52,53: Load control 1 output(Signal of relay contact)
54,55: Load control 2 output(Signal of relay contact)

56,57:Signal of remote control break
58,59:Signal of remote control make
60:PE line
61:N phase input
62,63,64:A,B,C three phase voltage input
65,66:Connect to the N phase current transformer input
67,68 Undervoltage release
69,70 Shunt release
71,72 Closing electromagnet
73,74,75 Energy storage motor
76-80:Auxiliary contact

73-can be directly connected to power (automatic pre-storing energy), alternatively connect power after connecting NO button(manul-controlled pre-storing energy).
Note:If control voltage of Q,F,X,M is different from each other, they can be connected to different power.

Picture 3 YCW1-1000H Intelligent air circuit breaker secondary connection diagram

YCW1 Air Circuit Breaker

Overall and mounting dimensions(mm)·

YCW1-1000 Fixed type

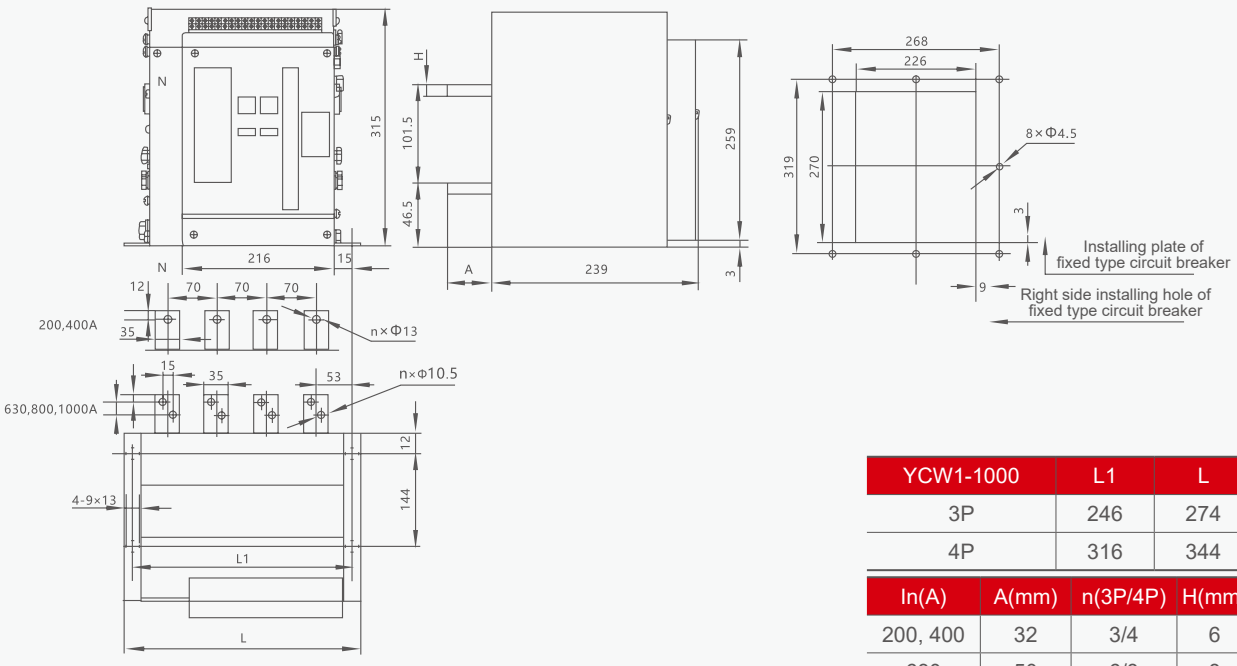

YCW1-1000	L1	L
3P	246	274
4P	316	344

In(A)	A(mm)	n(3P/4P)	H(mm)
200, 400	32	3/4	6
630	50	6/8	8
800, 1000	50	6/8	10

YCW1-1000 Draw out type

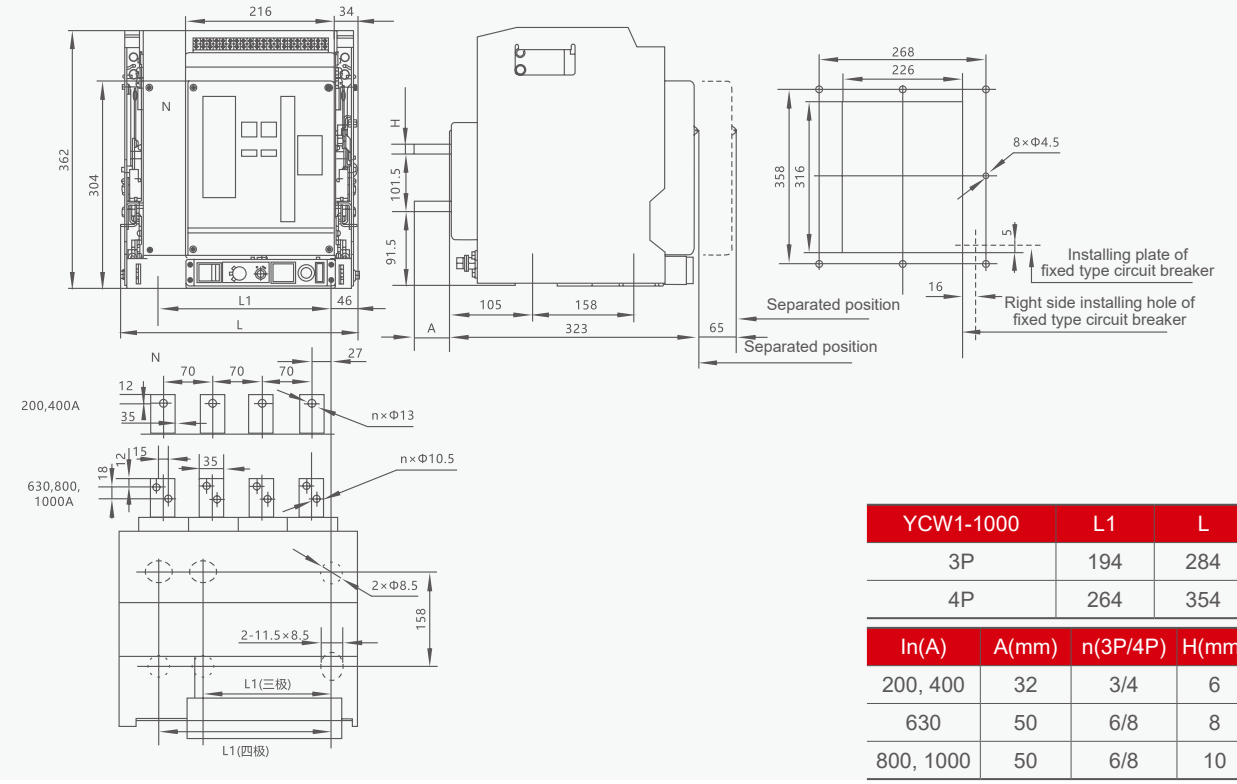

YCW1-1000	L1	L
3P	194	284
4P	264	354

In(A)	A(mm)	n(3P/4P)	H(mm)
200, 400	32	3/4	6
630	50	6/8	8
800, 1000	50	6/8	10

YCW1 Series Air Circuit Breaker



General

YCW1 series intelligent air circuit breakers (hereinafter called ACB) are applied for the network circuit of AC 50-60Hz,rated voltage 400V, 690V and rated current between630A and 6300A. Mainly used for distributing energy and protecting the circuit and power supply device against short-circuit, undervoltage, single-phase ground fault,etc. The ACB has intelligent protection function and the key parts adopt intelligent release. The release can make the accurate selective protection, which can avoid cutting off the power and improve the reliability of power supply.

Standard:IEC60947-1,IEC60947-2.

Type designation

YCW1 - 2000 / 3 + Installation + Control unit + Common use accessory + Optional accessory

Type		Rated current in scope of frame current		Number of poles	Installation
YCW1	-	2000	/	3	Installation
MCCB		2000 Type-in: 630A800A, 1000A,1250A, 1600A, 2000A 3200 Type-in:2000A,2500A,3200A; 6300 Type-in: 4000A,5000A,6300A		3-default, 4-4 pole	Fixed type-horizontal, vertical Draw out type-horizonal, vertical Note: 2000 type have vertical wiring, others are horizontal wiring

Control unit	Common use accessory	Optional accessory
Control unit	Common use accessory	Optional accessory
L type-dial switch mode, over-current protection (overload, short delay instantaneous). 2M type-digitaldisplay,over-current protection (overload,short delay. instantaneous), 4P or 3P+N have earthing protection (3M type is LCD display) 2H type-communication function, digital display, over-current protection (overload, short delay, instantaneous), 4P or 3P+N have earthing protection (3H type is LCD display).	Closing electromagnet-AC230V,AC400V,DC220V Undervoltage release-AC230V,AC400V,undervoltage instantaneous undervoltage time-delav Release(close) magnetic iron- AC230V, AC400V, DC220 VElectric operation mechanism-AC230V, AC400V, DC110V, DC220V Auxiliary contact-standard type.(4a4b), special type (5a5b, 6a6b)Note:a-normalopen, b-normal close	Mechanical inter-lock: one circuit breaker (1lock+1kev) two circuit breaker (steel cable inter-lock, connecting rod inter-lock, 2lock+1key) three circuit breakers (3locks+2keys, connecting rod inter lock) Automatic power transfer system Current transformer connected with neutral lead

YCW1 Series Air Circuit Breaker

Operating conditions

Item	Description
Ambient temperature	-5°C~+40°C (except special order products)
Altitude	≤2000m
Pollution grade	3
Safety category	Main circuit and undervoltage tripping coil is IV, other auxiliary and control circuit is III
Installation position	Vertical installed, tilt not exceed 5 degree
Environmental protection	Most of parts use recyclable and degradable materials
Isolating function	With isolating function

Curve

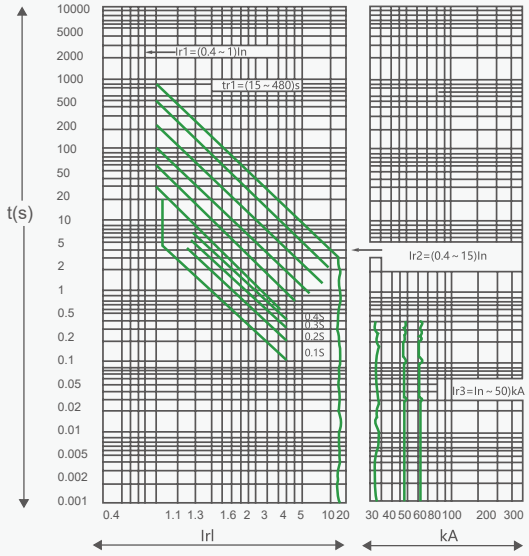

YCW1-2000~6300 Over current release
time/current characteristic curve

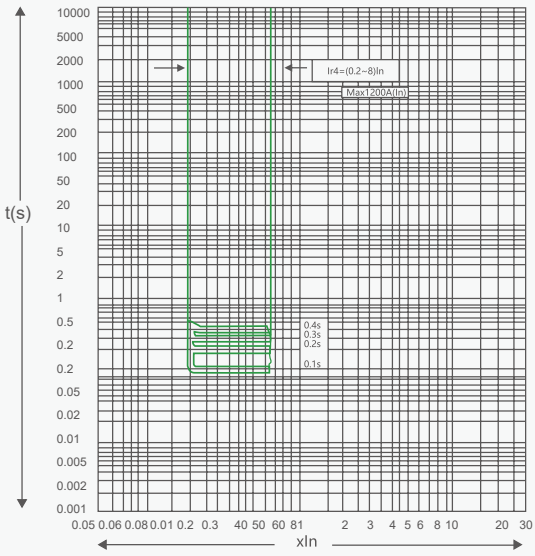

YCW1-2000~6300 Earth fault protection
time/current characteristic curve

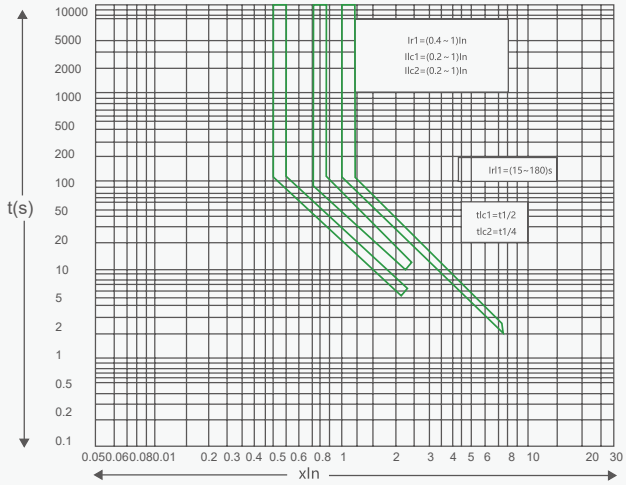

YCW1-Load monitoring (1)
time/current characteristic curve

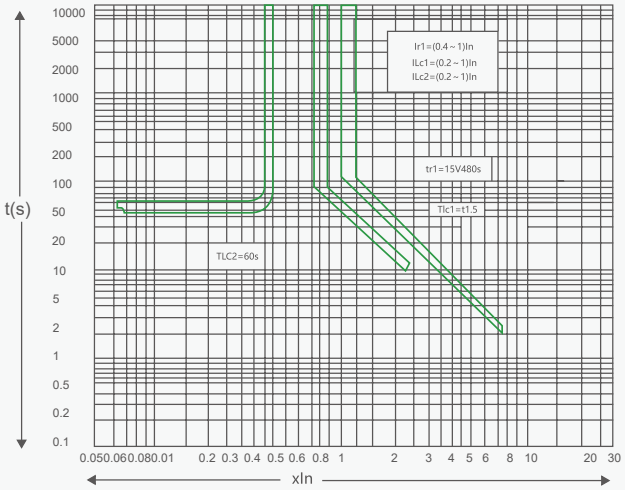

YCW1-Load monitoring (2)
time/current characteristic curve

YCW1 Series Air Circuit Breaker

Technical data

Type			YCW1-2000	YCW1-3200	YCW1-6300
Pole			3P, 4P	3P, 4P	3P, 4P
Using category			B	B	B
Rated current In		A	630, 800, 1000 1250, 1600, 2000	2000, 2500, 3200	4000, 5000, 6300
Rated frequency		Hz	50	50	50
Rated operation voltage Ue		V	400, 690	400, 690	400, 690
Rated insulation voltage Ui		V	800	800	800
Arcing distance		mm	0	0	0
Rated impulse withstanding voltage Uimp		V	8000	8000	8000
Rated operation short circuit breaking capacity Ics (O-t-CO)	400V	kA	50	80	100
	660V	kA	40	50	75
Rated limiting short circuit breaking capacity Icu (O-t-CO)	400V	kA	80	80	120
	660V	kA	50	65	85
Rated short time withstanding current Icw (O-t-CO, AC400V 0.4S	400V	kA	50	65	85
Operation life	Per hour	times	20	20	500
	Electrical	times	1000	500	5000
	Mechanical	times	10000	5000	20~30
Full breaking time		ms	20~30	20~30	55~70
Full closing time		ms	55~70	55~70	2000
Power consumption	3P	W	360	1200	2300
	4P	W	450	1750	-
Resistance of each pole	Fixed type	μΩ	11	9	10
	Draw out type	μΩ	20	14	
Dimensions (L×W×H)	3P fixed type	mm	362×323×402	422×323×402	
	3P draw out type	mm	375×461×452	435×471×452	
	4P fixed type	mm	457×323×402	537×323×402	
	4P draw out type	mm	470×461×452	550×471×452	
Approximate weight	3P fixed type	kg	41	55	
	3P draw out type	kg	71	95	245
	4P fixed type	kg	51.5	65	-
	4P draw out type	kg	86	115	260

YCW1 Series Air Circuit Breaker

Overload protection data

Overload protection		YCW1-2000~6300					
Adjust scope Ir1		(0.4-1)In (pole difference 2%)					
1.05 Ir1	h	2h non-tripping					
1.3 Ir1	h	≤1h tripping					
1.5 Ir1	s	15	30	60	120	240	480
2.0 Ir1	s	8.4	16.9	33.7	67.5	135	270
Accuracy	%	±15					

Short circuit, short time delay		
Adjust scope Ir1 Ir2		(0.4-15)In (pole difference 2%)
Delay time tr2	ms	100, 200, 300, 400
Accuracy	%	±15

Short circuit, instantaneous				
		YCW1-2000	YCW1-3200	YCW1-6300
Adjust scope Ir1 Ir3		1In-50kA	1In-75kA	1In-100kA
Accuracy	%	±15	±15	±15

Load monitoring output		
Load adjust scope Ic1		(0.2-1)In (pole difference 2%)
Delay time tc1		tr1×0.5
Load adjust scope Ic2		(0.2-1)In (pole difference 2%)
Delay time tc2		tr1×0.25 (anti-time limit)
Accuracy		60 (set time limit)
	%	±10

YCW1 Series Air Circuit Breaker

B

Overall and mounting dimensions(mm)

YCW1-2000A Fixed circuit-breaker installation and overall dimensions are shown

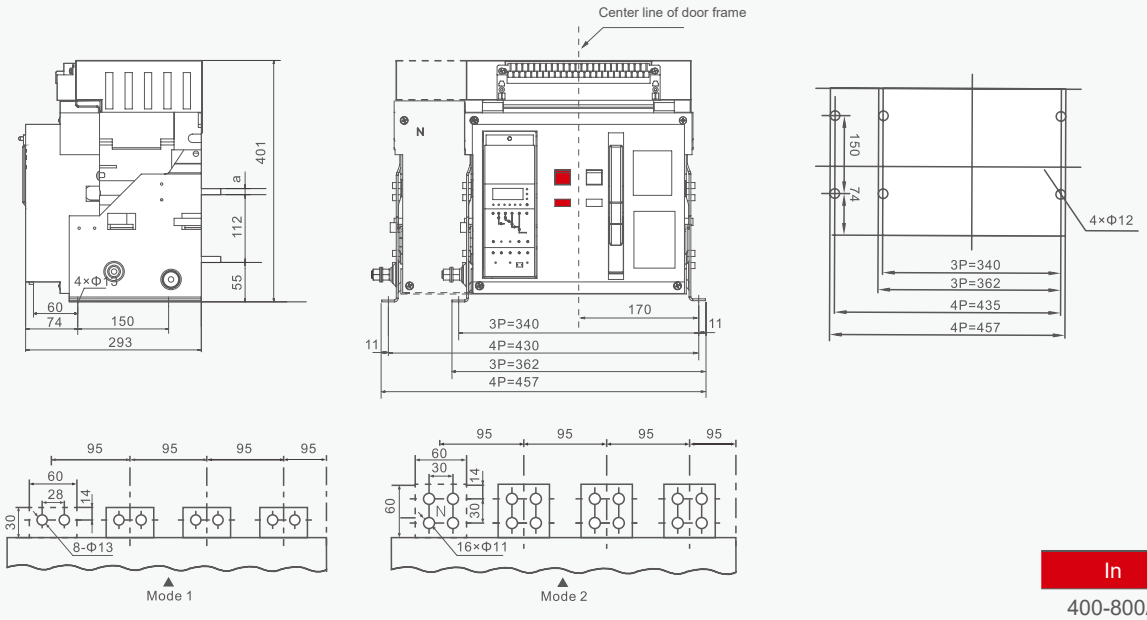

Fixed Circuit-Breaker Installation and Overall Dimensions (Inm equals to 2000A three or four-pole)

In	a mm
400-800A	10
1000-1600A	15
2000A	20

YCW1-3200A Fixed circuit-breaker installation and overall dimensions are shown

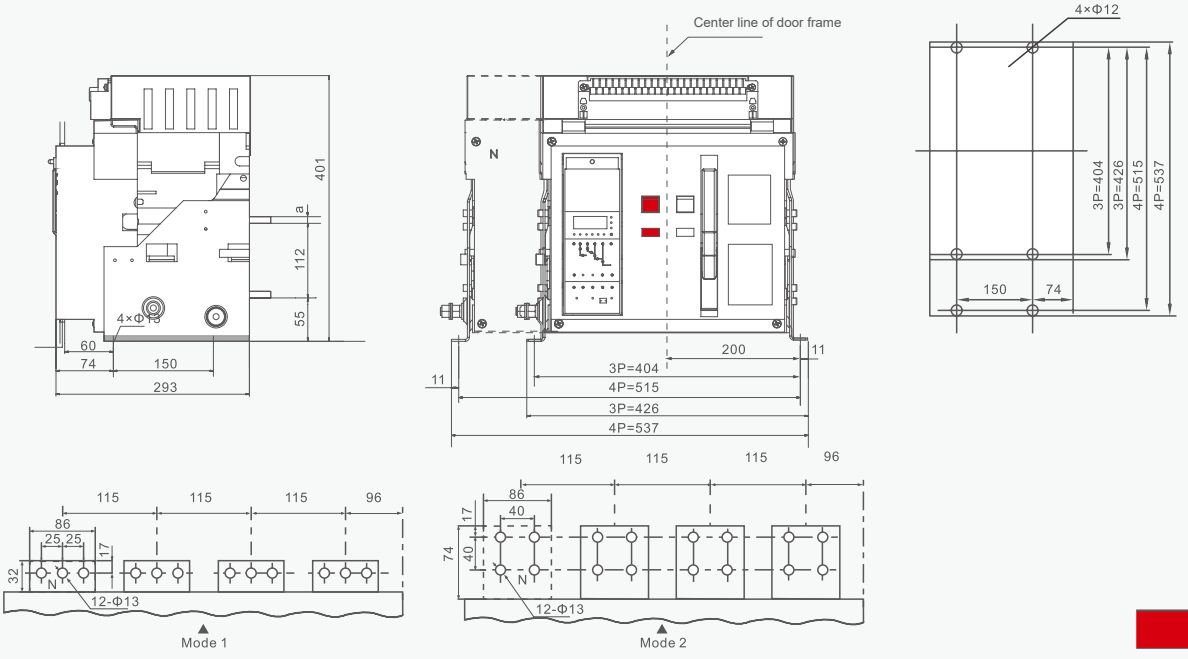

Fixed Circuit-Breaker Installation and Overall Dimensions ((Inm equals to 3200A three or four pole)

In	a mm
2000A,2500A	20
2900A,3200A	30

YCW1 Series Air Circuit Breaker

YCW1-4000A Fixed circuit-breaker installation and overall dimensions are shown

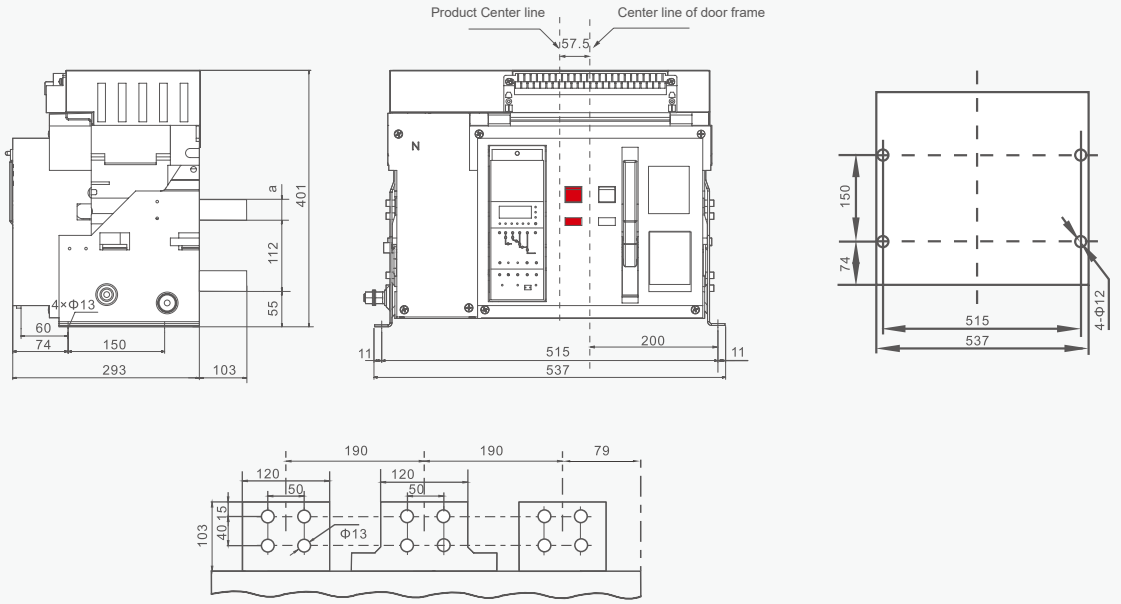

In	a mm
2500-4000A	30

YCWI-6300/3P Fixed circuit breaker and overall dimension are shown

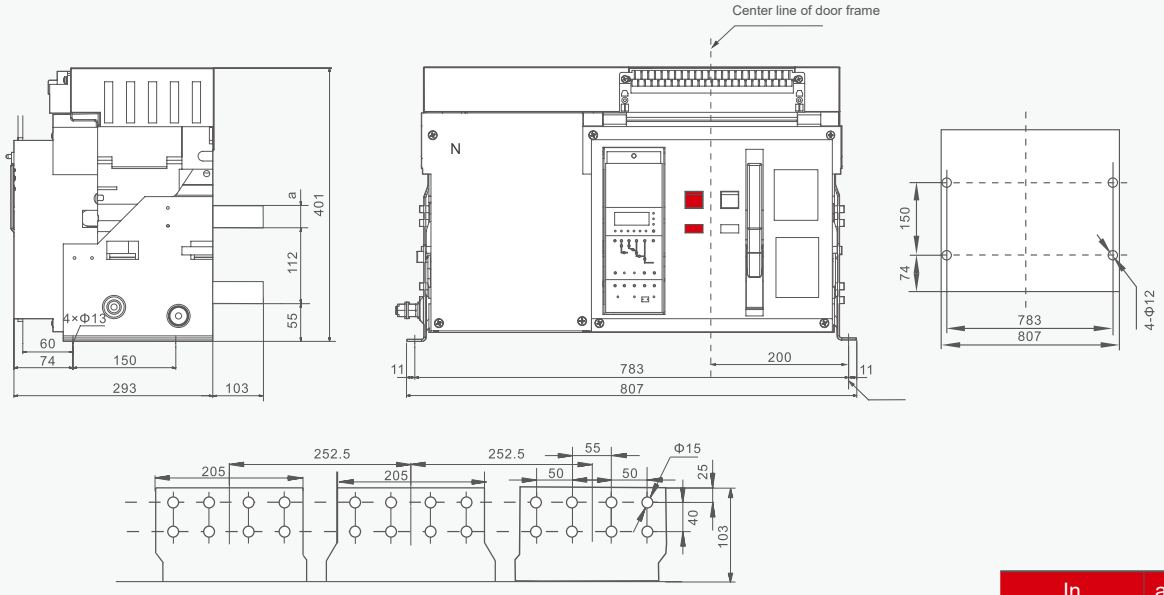

YCW1-6300/4000A, 5000A/3P

In	a mm
4000A	20
5000A	30

YCW1 Series Air Circuit Breaker

B

YCW1-6300A Fixed circuit breaker and overall dimension are shown

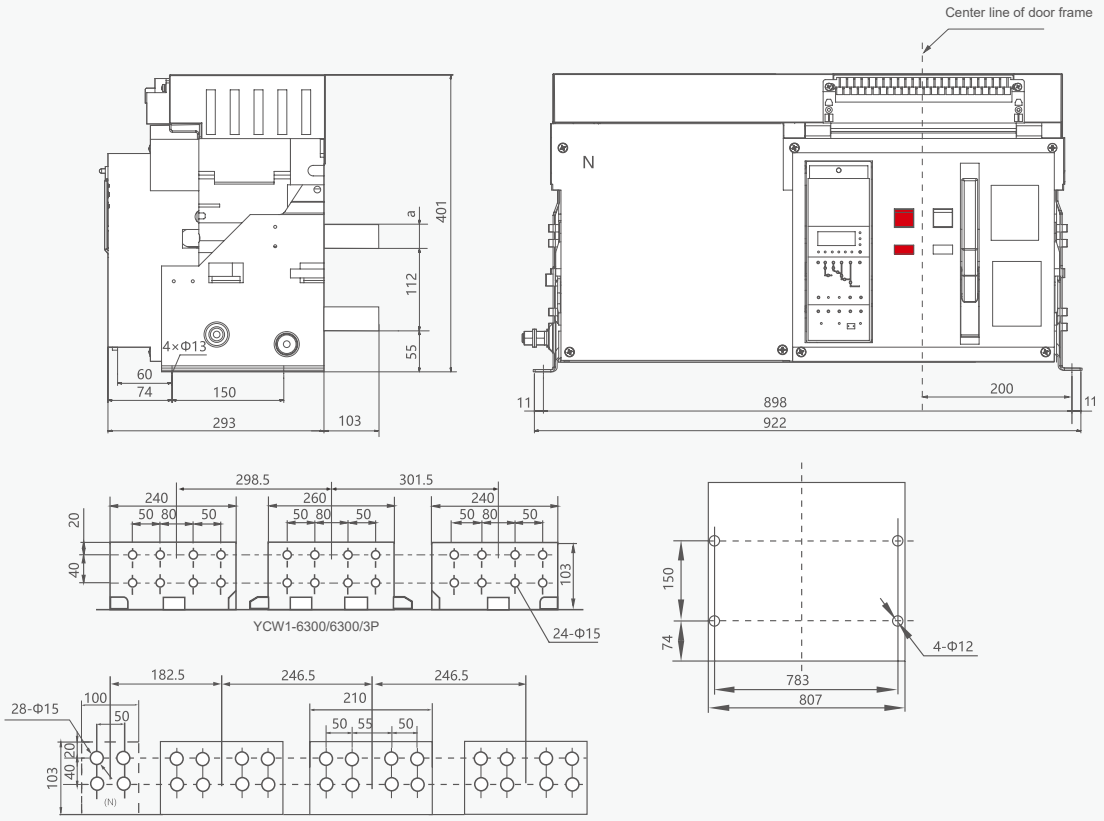

In	a mm
4000A	20
5000A	30
6300A	

YCW1-2000A Drawer circuit breaker and overall dimension are shown

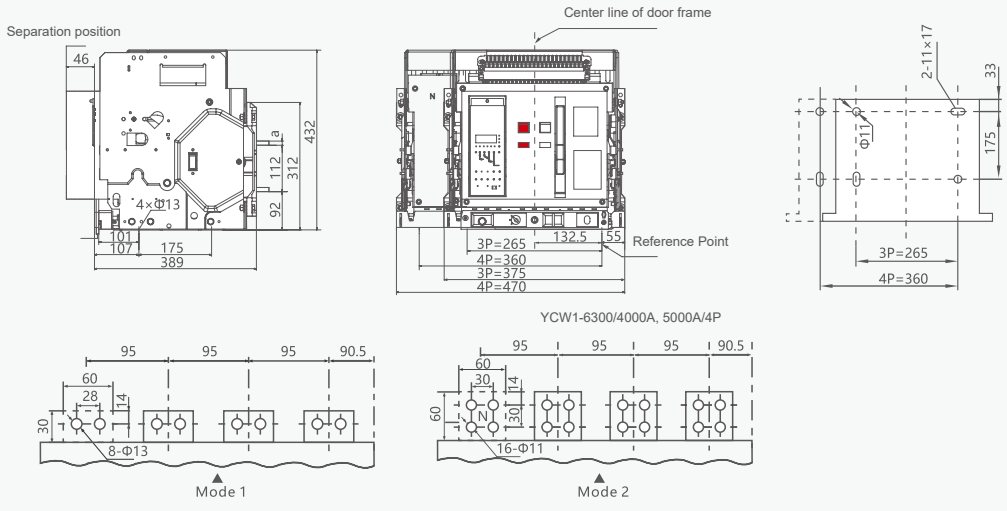

In	a mm
400-800A	10
1000-1600A	15
2000A	20

YCW1 Series Air Circuit Breaker

YCW1-3200A Drawer circuit breaker and installation size are shown

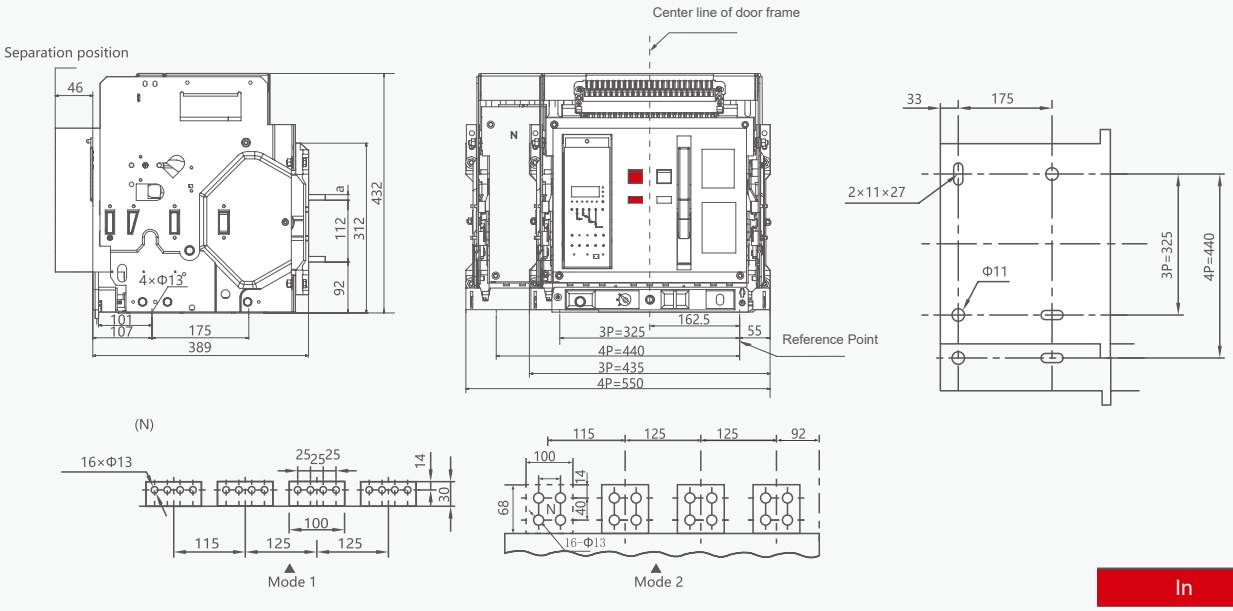

In	a mm
2000A , 2500A	20
2900A , 3200A	30

YCWI-4000A Drawer circuit breaker and installation size are shown

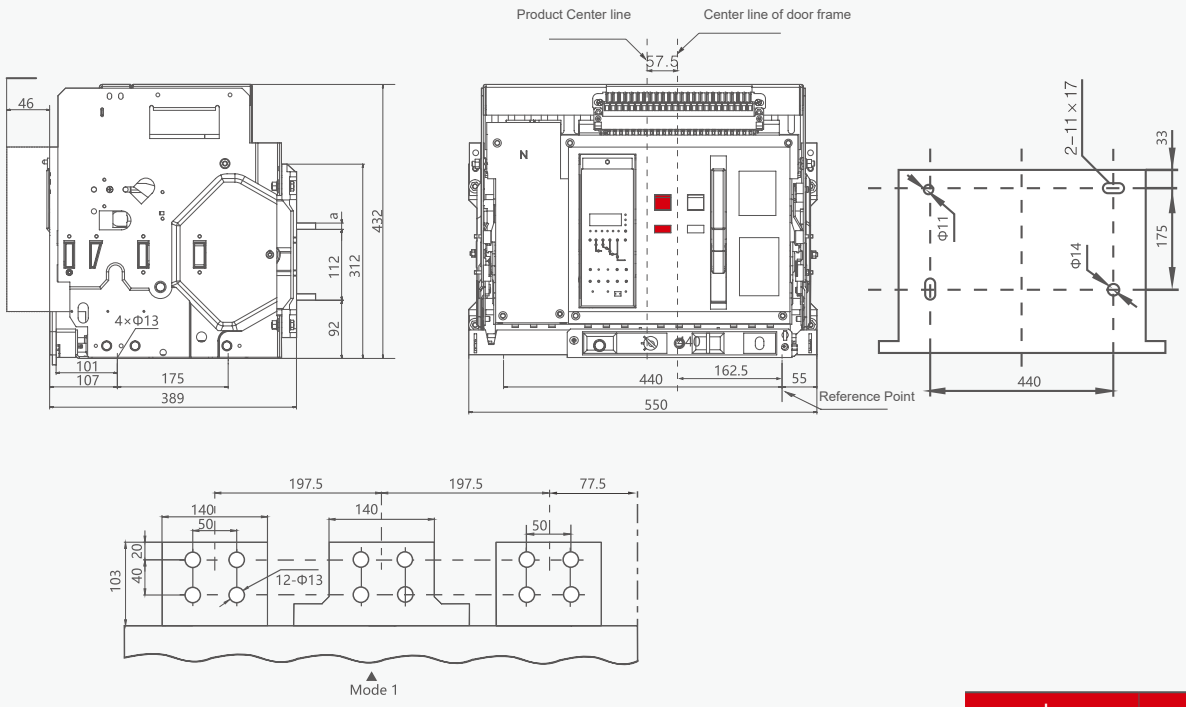

Installation of drawer circuit breaker and overall dimension (Imn = 4000A three-pole)

In	a mm
2000A , 2500A	20
3200A , 4000A	30

B

YCW1-6300 /3P Drawer circuit breaker (quadrupole) and installation size.

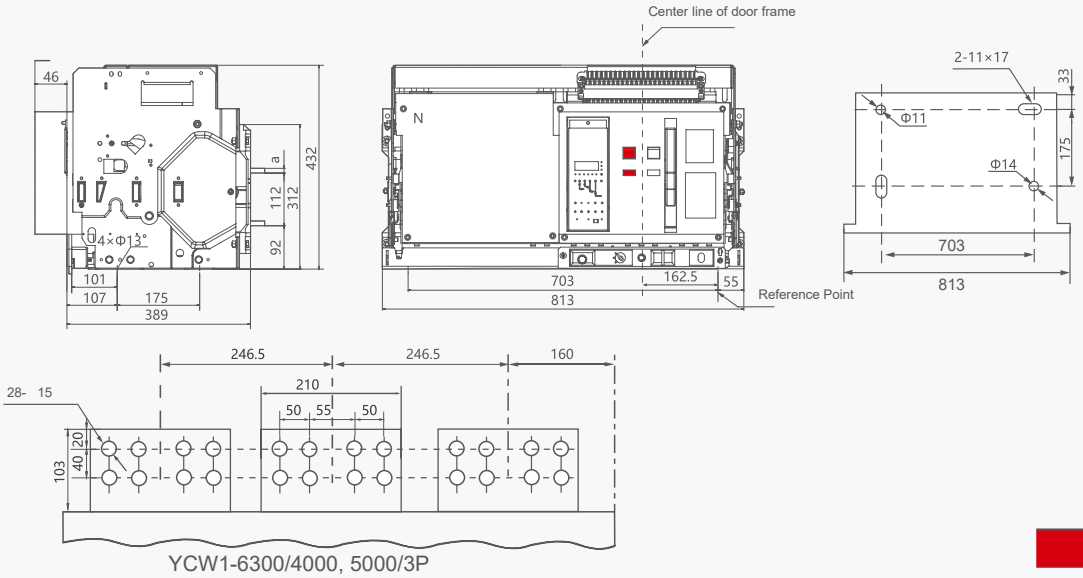

YCW1-6300/4000, 5000/3P

Installation of drawer circuit breaker and overall dimension (Inm=.4000A quadrupole).

In	a mm
4000A	20
5000A	30

YCWI-6300A Drawer circuit breaker and overall dimension are shown

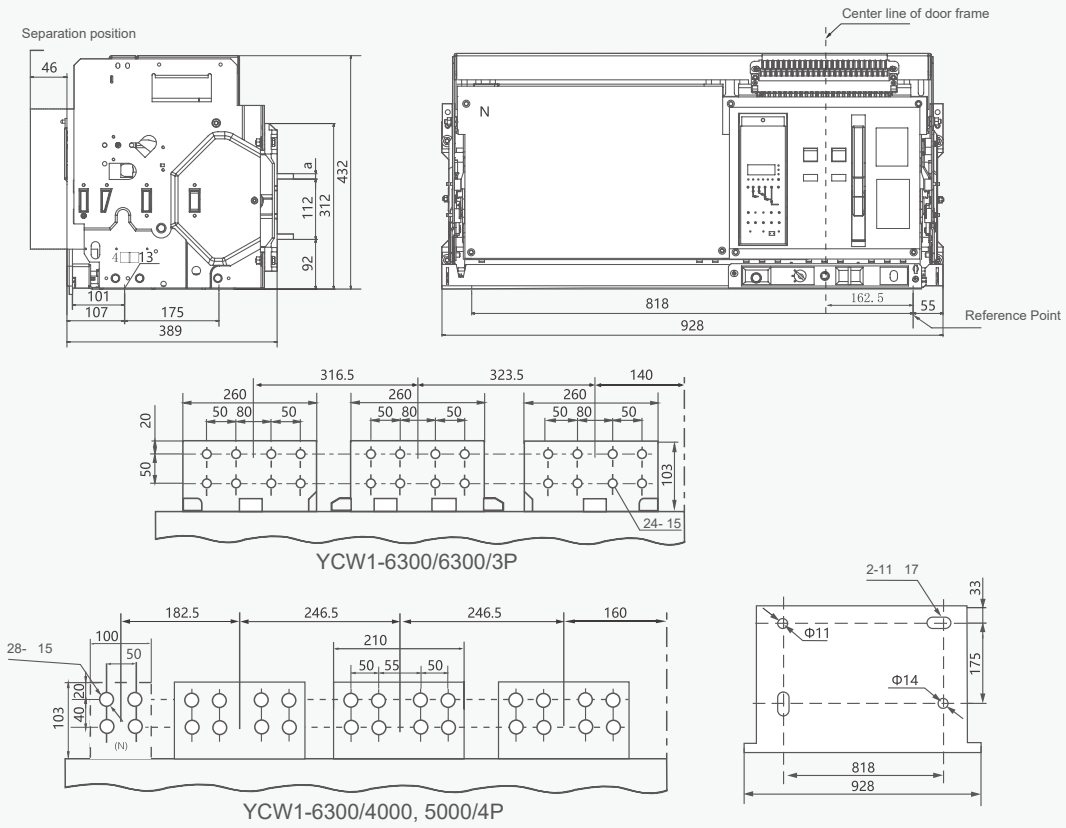

YCW1-6300/6300/3P

YCW1-6300/4000, 5000/4P

Figure 24 Drawer circuit breaker installation and overall dimension (Inm=6300A) (4000A, 5000A three-pole and quadrupole as well as 6300 A three-pole)

In	a mm
4000A	20
5000A	30

YCW1 Series Air Circuit Breaker

Installation and figure dimension of draw-out type circuit breaker (Inm=3200A 3P 4P)
Dimension of panel hole see picture and table Unit:mm

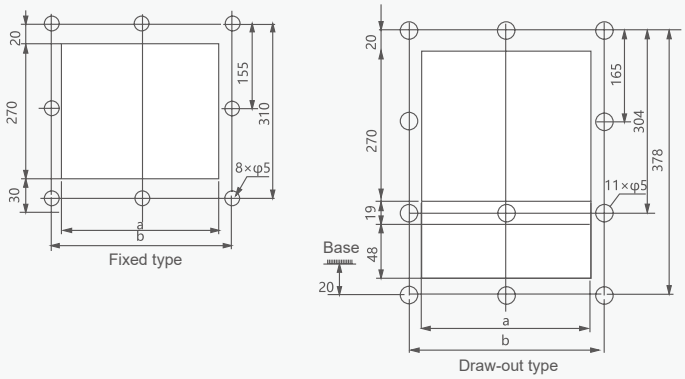

Installation dimension of panel hole

Type	a mm	b mm
YCW11-2000	306	346
YCW11-3200-6300	366	406

Interlock device of circuit breaker is shown in the picture Unit:mm
Vertical installation of interlocking circuit breaker devices

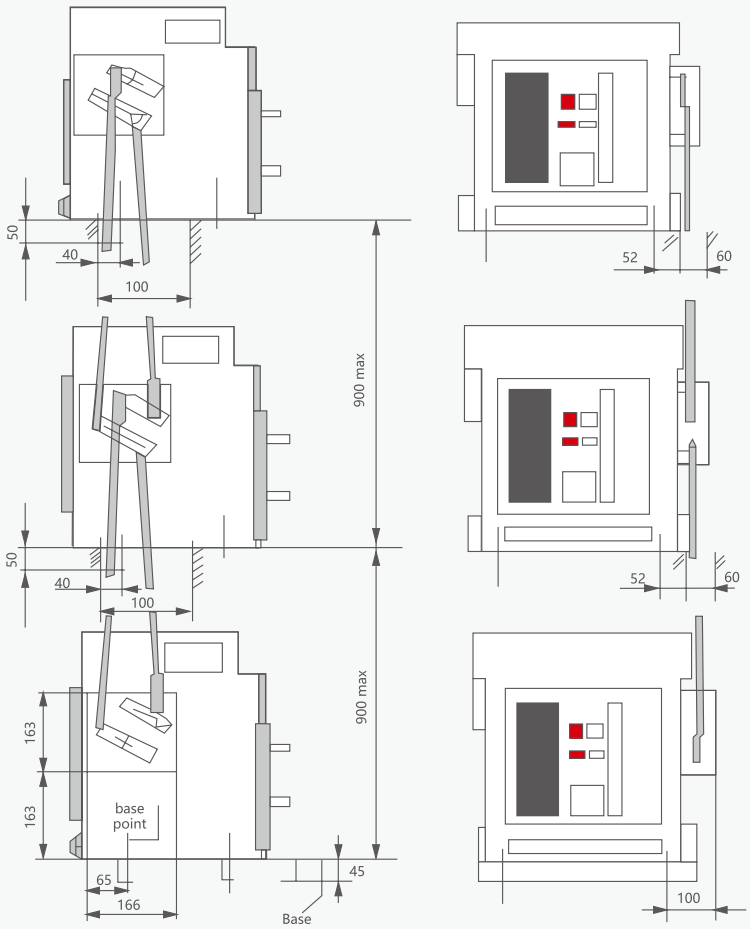

Note:
The left figure shows how to vertically install 3 circuit breaker interlocking devices and just removes the top one if only 2 circuit breakers needed.

YCW1 Series Air Circuit Breaker

Horizontal installation of interlocking circuit breaker devices

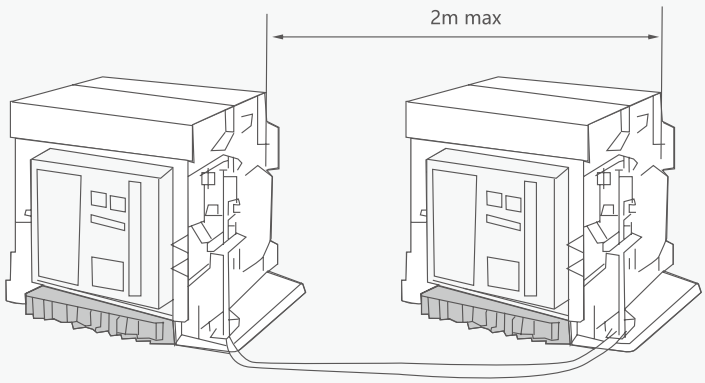

Note:
Iron cable interlocks 2 horizontal position circuit breakers (fixed of draw-out type),and the left picture shows how to horizontally interlock circuit breaker devices.

Characteristic of intelligent controller

	Basic function
	Overload long time-delay/anti-time limit protection
	Short circuit short time-delay/anti-time limit protection
	Short circuit short time-delay timing protection
	Short circuit instantaneous protection
	Insulate earth fault protection

Basic function		
Current (select 1)	Digital display	Can display L1, L2, L3, Imax IG(earth), IG(Neutral)
Voltage (select 2) Power (select 2)	Digital display	Can display U12, U23, U31, Umin
		P
Power factor (select 2)		COSΦ
Warning function		
Over current fault warning	Light-emitting diodes on panel	After fault trip indicator light corresponding
Fault category identification	Light-emitting diodes on panel	Overload log time-delay
		Short circuit short time-delay
		Short circuit instantaneous
		Earth fault
Fault phase sequence	Digital display	Display the fault phase sequence
Current		Breaking current
Time display		Breaking time
Contact loss indication	Digital display	Display percentage of loss
Self-diagnosis function		Send the error signal

YCW1 Series Air Circuit Breaker

Testing function		
Panel key	Tripping	Test the time current characteristic of release and situation of operation device
Remote monitoring function	Non-tripping	Test the time current characteristic of release
Remote monitoring code signal optocoupler	Relay (contain power) module	Output of various working condition
Communication function		
Communicate type	RS485 (communication) I/O	User should consult with the manufacturer

Electrical accessories

Under-voltage release	Rated working voltage Ue(V)	AC400 AC230
	Acting voltage (V)	(0.35~0.7) Ue
	Reliable close voltage (V)	(0.85~1.1) Ue
	Non close voltage (V)	≤0.335Ue
	Power loss	12VA (YCW1-1000 5VA)
	RS485 (communication) I/O	User should consult with the manufacturer

Under-voltage release	Rated control power voltage Us(V)	AC400 AC230 DC220 DC110
	Acting voltage (V)	(0.7~1.1) Ue
	Power loss	40VA 40W (YCW1-1000 5VA)
	Open time	less than 30ms

Close electromagnetic iron	Rated control power voltage Us(V)	AC400 AC230 DC220 DC110
	Acting voltage (V)	(0.85~1.1) Ue
	Power loss	40VA 40W (YCW1-1000 5VA)
	Open time	less than 70ms

Motor operating device	Rated control power voltage Us(V)	AC400 AC230 DC220 DC110
	Acting voltage (V)	(0.85~1.1) Ue
	Power loss	40VA 40W (YCW1-1000 5VA)
	Open time	less than 5s

YCW1i Air Circuit Breaker



General

YCW1i - 1600 series universal circuit breakers (hereinafter referred to as circuit breakers) are suitable for AC 50Hz distribution networks with rated voltage of AC400V/690V and below, and rated current ranging from 200A to 1600A. They are mainly used to distribute electrical energy, and protect circuits and power equipment from overload, undervoltage, short circuit, single - phase grounding and other faults. Under normal conditions, it can also be used for infrequent switching of lines. The circuit breaker has intelligent protection function, precise selective protection, can improve power supply reliability and avoid unnecessary power outages. At the same time, it has an open communication interface and can be used for “four remotes” to meet the requirements of the control center and automation system.

This circuit breaker has isolation function, represented by: 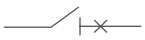

Standards: IEC60947 - 2.

Type designation

YC W 1i - 1600 □

- □ — Number of poles of circuit breaker, 3 poles can be omitted
- 1600 — Frame current of circuit breaker
- 1i — Design code
- W — Universal circuit breaker
- YC — Enterprise code

Operating conditions

a. Environmental temperature

The ambient air temperature is -5°C~+40°C, and its average temperature value within 24 hours does not exceed +35°C. When the ambient temperature exceeds +40°C, it must be reduced according to Table 1-1 of P8, and the maximum allowable temperature is +65°C. Low temperature environments should be declared for customization at the time of ordering.

b. Altitude

The altitude of the installation site shall not exceed 2000m (If it exceeds 2000 meters, it is necessary to reduce the capacity for use, and the derating requirements refer to Table 1-2 of P8).

c. Humidity

Relative humidity of air: When the maximum temperature is 40°C, the relative humidity of the air does not exceed 50%. Higher relative humidity can be allowed at lower temperatures, such as 90% at 20°C. Special measures should be taken for condensation caused by temperature changes.

d. Pollution level: 3.

e. Selective category: B

f. Installation Category

The installation category of the circuit breaker is IV, when the rated operating voltage of the main circuit is ≤AC400V, for the installation category of the auxiliary circuit, besides that the coil of the undervoltage release and the transformer for the intelligent controller or the coil at the primary side of the power module are the same with that of the circuit breaker, when the rated operating voltage of the main circuit is >AC400V and ≤AC690V, the auxiliary circuit needs to be isolated from the main circuit by a transformer, with capacity of 22kVA and the maximum operating voltage of the control circuit is AC400V, and the installation category of auxiliary circuits is III.

g. Installation conditions: The circuit breaker should be installed according to the requirements of this manual, and its vertical inclination should not exceed 5°.

h. Transportation and storage conditions: between -25°C and +55 °C, up to +70 °C in a short period of time (24 hours)

YCW1i Air Circuit Breaker

Technical data

Rated frame current		1600
Rated operating current In(A)		200/315/400/500/630/800/1000/1250/1600
Number of poles		3P/4P
Frequencyy (Hz)		50
Rated operating voltage Ue(V)		400/690
Rated insulation voltage Ui(V)		1000
Rated impulse withstand voltage Uimp (kV)		12
Breaking capacity level		Empty (conventional)
Rated ultimate breaking capacity Icu	AC400V	55
	AC690V	25
Rated service breaking capacity IcS(kA)	AC400V	42
	AC690V	20
Rated short time withstand current Icw/Is(kA)	AC400V	42
	AC690V	20
Service life	Mechanical	Maintenance-free 3000, with maintenance10000
	Electrical	Maintenance-free 1000
Arc distance (mm)		0
Installation mode		Fixed/draw-out type
Connection mode		Horizontal/Vertical
Controller type		M, H, 2H, 3M, 3H

B

Secondary wiring diagram of 1600 frame M-type controller

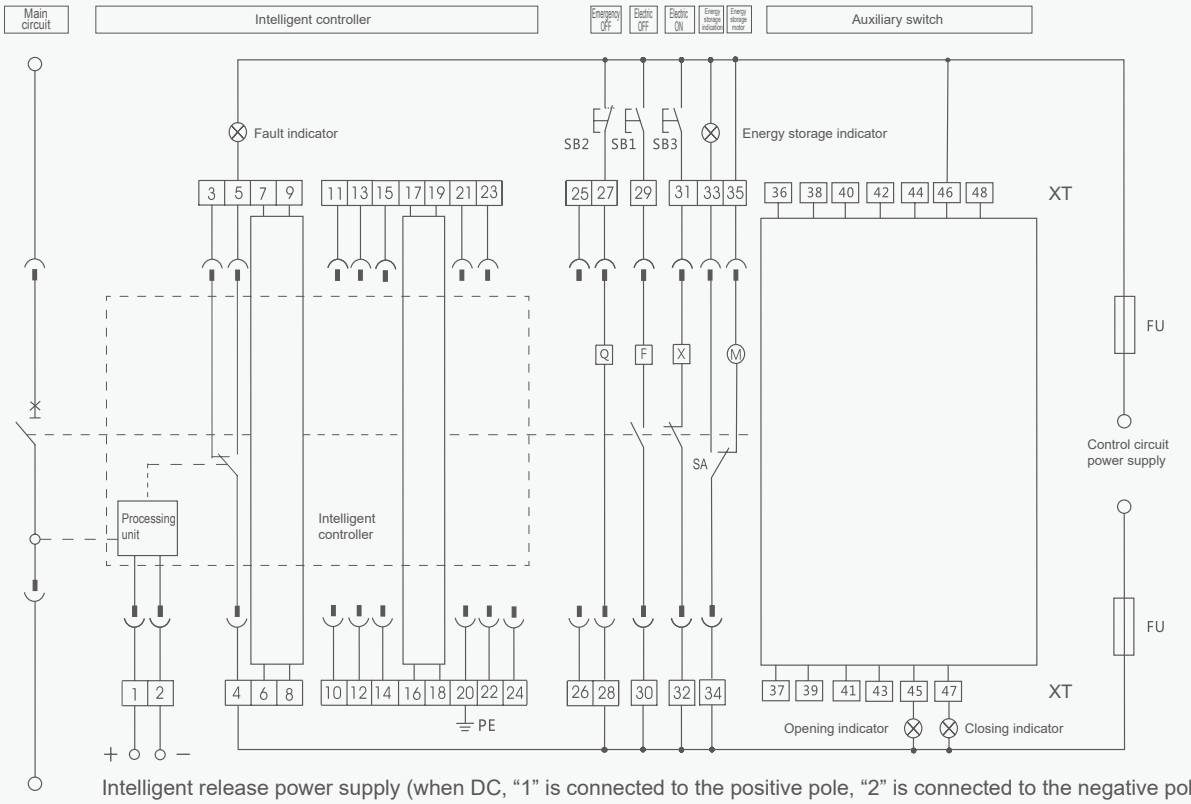

Intelligent release power supply (when DC, “1” is connected to the positive pole, “2” is connected to the negative pole)

AC 230V AC 400V
DC 110V DC 220V

#1 and #2: controller auxiliary power supply, with #1 as the positive pole when the power supply is DC
#3, #4, #5: fault trip contact output, #4 is a common point
#6 - #9: normally blank (according to Figure 2 when customizing six sets of conversion contacts)
#10, #11: blank
#12, #13: Load 1 alarm signal output
#14, #15: Load 2 alarm signal output
#16 - #19: blank
#20: Protective ground wire
#21 - #24: blank
#25, #26: external transformer signal input terminal (blank if none)
#27, #28: undervoltage release power supply (Q)
#29, #30: shunt release power supply (F)
#31, #32: closing electromagnet power supply (X)
#33, #34: energy storage indicator
#34, #35: energy storage motor power supply
SB1 shunt button, SB2 emergency opening button, SB3 closing button, XT wiring terminal,
SA travel switch, FU fuse (6A)

Note:

1. #33 must be connected in series with the indicator light before connecting to the power supply, otherwise it may cause a short circuit in the circuit.
2. A button can be connected in series between #35 and the power supply for manual pre - energy storage.
3. The buttons, indicator lights and fuses in the picture need to be provided by the user
4. The status of the wiring diagram refers to the circuit breaker opening, no energy storage, and the reset button not popping up.

Figure 1
Four sets of conversion contacts (default configuration)

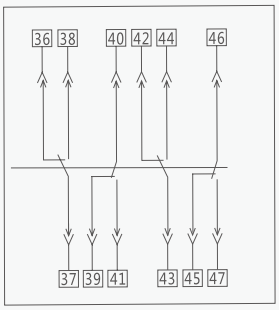

Figure 2
Six sets of conversion contacts (customized as needed)

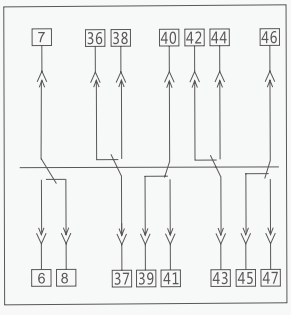

B

Secondary wiring diagram of 1600 frame H-type communication controller

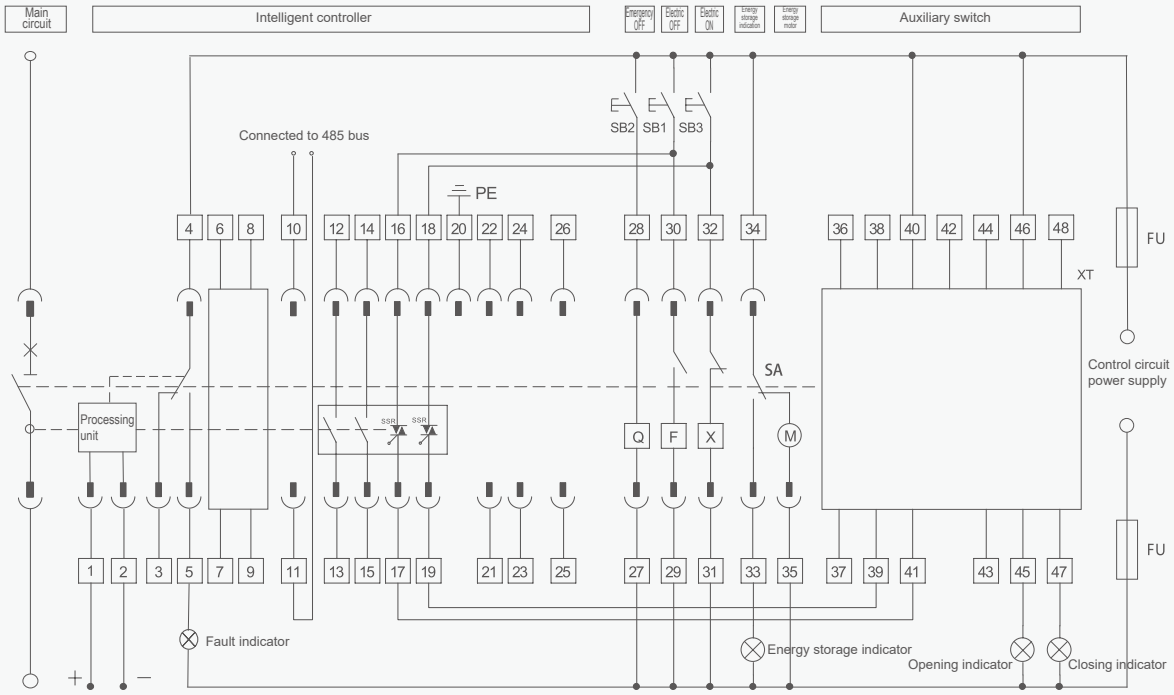

Intelligent release power supply (when DC, “1” is connected to the positive pole, “2” is connected to the negative pole)

AC 230V AC 400V
DC 110V DC 220V

#1 and #2: controller auxiliary power supply, with #1 as the positive pole when the power supply is DC
#3, #4, #5: fault trip contact output, #4 is a common point
#6 - #9: normally blank (according to Figure 2 when customizing five sets of conversion contacts)
#10, #11: RS485 communication interface A and B ends
#12, #13: Load 1 alarm signal output
#14, #15: Load 2 alarm signal output
#16 - #17: Remote opening control output (D03 bidirectional thyristor controlled pure electromagnetic coil)
#18 - #19: Remote opening control output (D04 bidirectional thyristor controlled pure electromagnetic coil)
#20: Protective ground wire
#21: N-phase voltage signal input
#22: A-phase voltage signal input
#23: B-phase voltage signal input
#24: C-phase voltage signal input
} (Voltage function required)
#25, #26: external transformer signal input terminal (blank if none)
#27, #28: undervoltage release power supply (Q)
#29, #30: shunt release power supply (F)
#31, #32: closing electromagnet power supply (X)
#33, #34: energy storage indicator
#34, #35: energy storage motor power supply
SB1 shunt button, SB2 emergency opening button, SB3 closing button, XT wiring terminal,
SA travel switch, FU fuse (6A)

Note:

1. #33 must be connected in series with the indicator light before connecting to the power supply, otherwise it may cause a short circuit in the circuit.
2. A button can be connected in series between #35 and the power supply for manual pre-energy storage.
3. The buttons, indicator lights and fuses in the picture need to be provided by the user
4. The status of the wiring diagram refers to the circuit breaker opening, no energy storage, and the reset button not popping up.

Figure 1
Four sets of conversion contacts (default configuration)

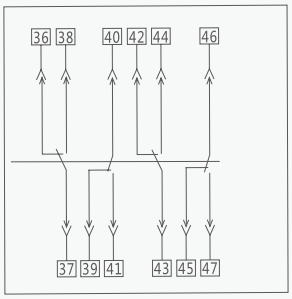

Figure 2
Six sets of conversion contacts (customized as needed)

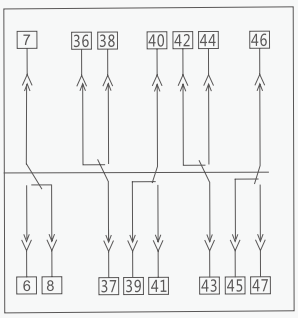

YCW1i Air Circuit Breaker

B

Overall and mounting dimensions(mm)

1.Overall and installation dimensions of fixed circuit breakers

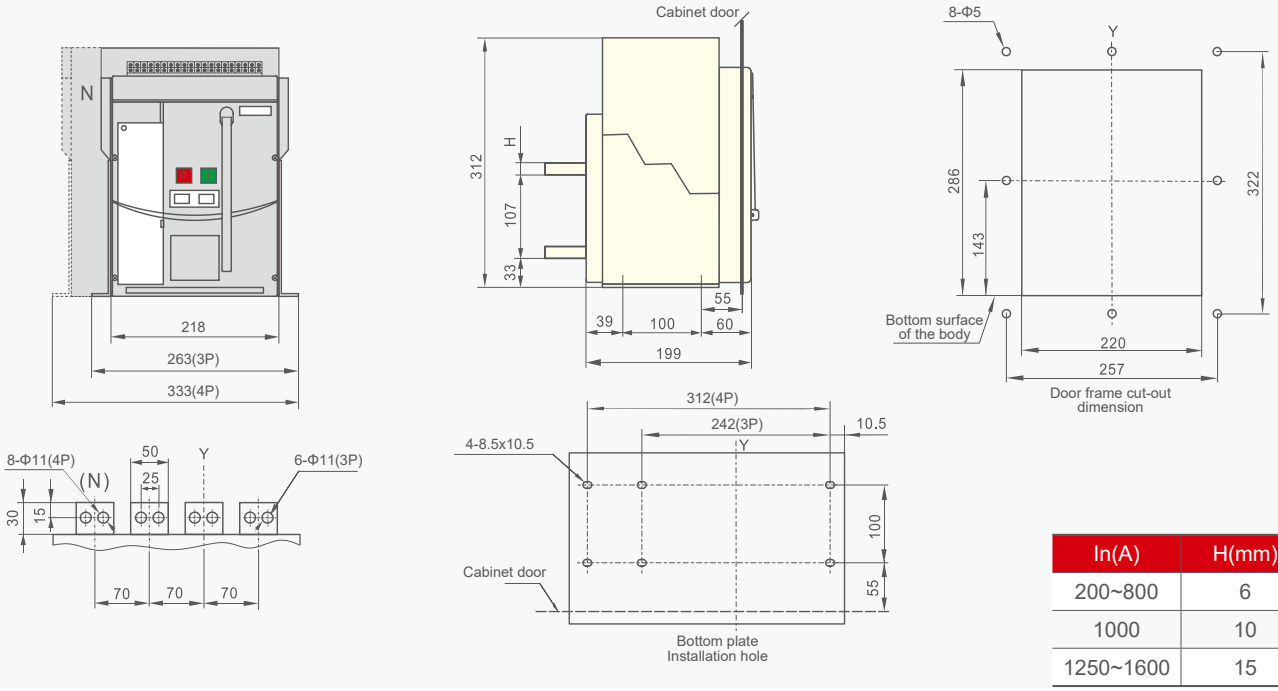

In(A)	H(mm)
200~800	6
1000	10
1250~1600	15

2. Overall and installation dimensions of draw-out circuit breakers

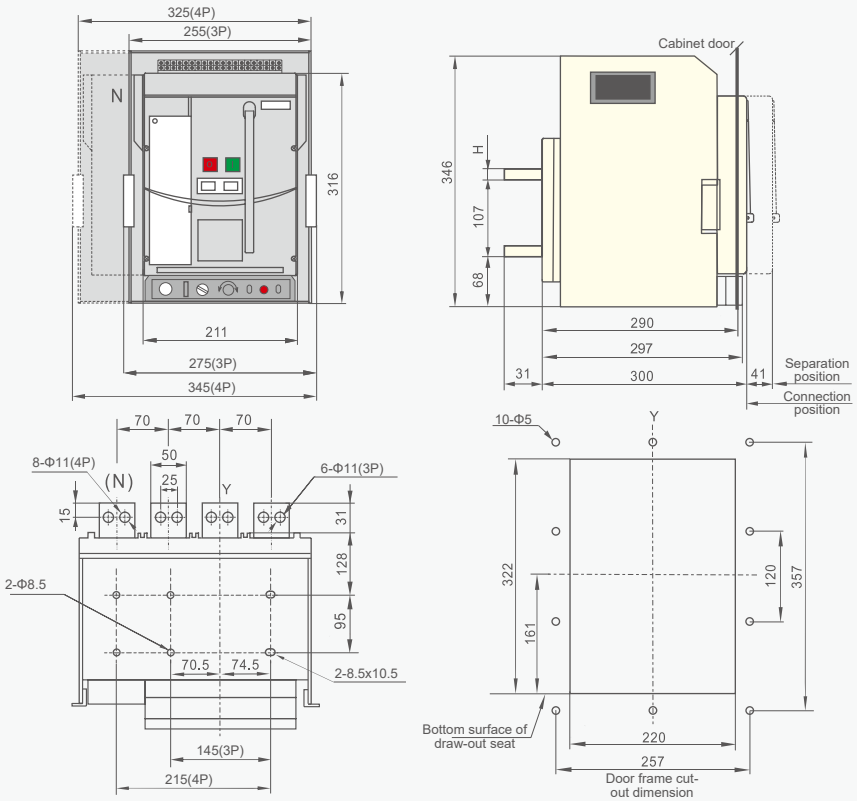

In(A)	H(mm)
200~800	6
1000	10
1250~1600	15

YCW1i Air Circuit Breaker



General

YCW1i - 2000~6300 series intelligent universal circuit breakers (hereinafter referred to as circuit breakers) are suitable for AC 50Hz distribution networks with rated voltage of AC400V/690V and below, and rated current ranging from 200A to 1600A. They are mainly used to distribute electrical energy, and protect circuits and power equipment from overload, undervoltage, short circuit, single - phase grounding and other faults. Under normal conditions, it can also be used for infrequent switching of lines. The circuit breaker has intelligent protection function, precise selective protection, can improve power supply reliability and avoid unnecessary power outages. At the same time, it has an open communication interface and can be used for “four remotes” to meet the requirements of the control center and automation system.

This circuit breaker has isolation function, represented by: 

Standards: IEC60947 - 2.

Type designation

YC W 1i - □ / □

- Number of poles (4 for four poles, three poles not marked)
- Rated frame current Inm(A)
- Design code
- Universal circuit breaker
- Enterprise code

- Classification:

  Classified by installation mode

  a. Fixed type

  b. Draw-out type

  Classified by number of poles: three poles, four poles

  Classified by operation mode

  a. Electrical operation

  b. Manual operation (for maintenance and repair)

- Release type:

  Intelligent controller, undervoltage instantaneous (or delay) release, shunt release.

- Intelligent controller performance:

  a. Intelligent controllers are classified into: M-type, 3M type, H-type, 2H type and 3H type;

  b. It is equipped with overload long delay inverse time limit, short delay inverse time limit, definite time limit, instantaneous function, which can be set by the user to form the required protection characteristics;

  c. Single phase grounding protection function;

  d. Display function: setting current display, action current display, and voltage display of each phase (voltage display should be proposed when ordering);

  e. Alarm function: overload alarm;

  f. Self-inspection function: overheating self-inspection, microcomputer self diagnosis;

  g. Test function: it tests the action characteristics of the intelligent controller.

B

Normal service and installation conditions

- Environmental temperature

  The ambient air temperature is -5°C~+40°C, and its average temperature value within 24 hours does not exceed +35°C. When the ambient temperature exceeds +40°C, it must be reduced according to Table 1-1, and the maximum allowable temperature is +65°C. Low temperature environments should be declared for customization at the time of ordering.

- Altitude

  The altitude of the installation site shall not exceed 2000m (If it exceeds 2000 meters, it is necessary to reduce the capacity for use, and the derating requirements refer to Table 1-2).

- Humidity

  Relative humidity of air: When the maximum temperature is 40°C, the relative humidity of the air does not exceed 50%. Higher relative humidity can be allowed at lower temperatures, such as 90% at 20°C. Special measures should be taken for condensation caused by temperature changes.

- Pollution level: 3.
- Selective category: B
- Installation Category

  The installation category of the circuit breaker is IV, when the rated operating voltage of the main circuit is ≤AC400V, for the installation category of the auxiliary circuit, besides that the coil of the undervoltage release and the transformer for the intelligent controller or the coil at the primary side of the power module are the same with that of the circuit breaker, when the rated operating voltage of the main circuit is >AC400V and ≤AC690V, the auxiliary circuit needs to be isolated from the main circuit by a transformer, with capacity of 22kVA and the maximum operating voltage of the control circuit is AC400V, and the installation category of auxiliary circuits is III.

- Installation conditions: The circuit breaker should be installed according to the requirements of this manual, and its vertical inclination should not exceed 5°.
- Transportation and storage conditions: between -25°C and +55°C, up to +70°C in a short period of time (24 hours).

Table 1-1 Derating at different temperatures

Ambient temperature	Permissible continuous operating current
+40°C	1In
+45°C	0.95In
+50°C	0.9In
+55°C	0.85In
+60°C	0.8In
+65°C	0.78In

Table 1-2. Derating at different altitudes

Altitude (m)	Rated operating current (A)	Power frequency withstand voltage (V)	Insulation voltage (V)	Rated operating voltage (V)
2000	1Ie	2200	1000	690
2500	0.93 Ie	2070	900	635
3000	0.88 Ie	1950	800	580
3500	0.83 Ie	1850	750	540
4000	0.78 Ie	1760	700	500
4500	0.73 Ie	1680	650	450
5000	Please contact us	1600	600	400

YCW1i Air Circuit Breaker

Brief introduction of structure

Circuit breaker front indication

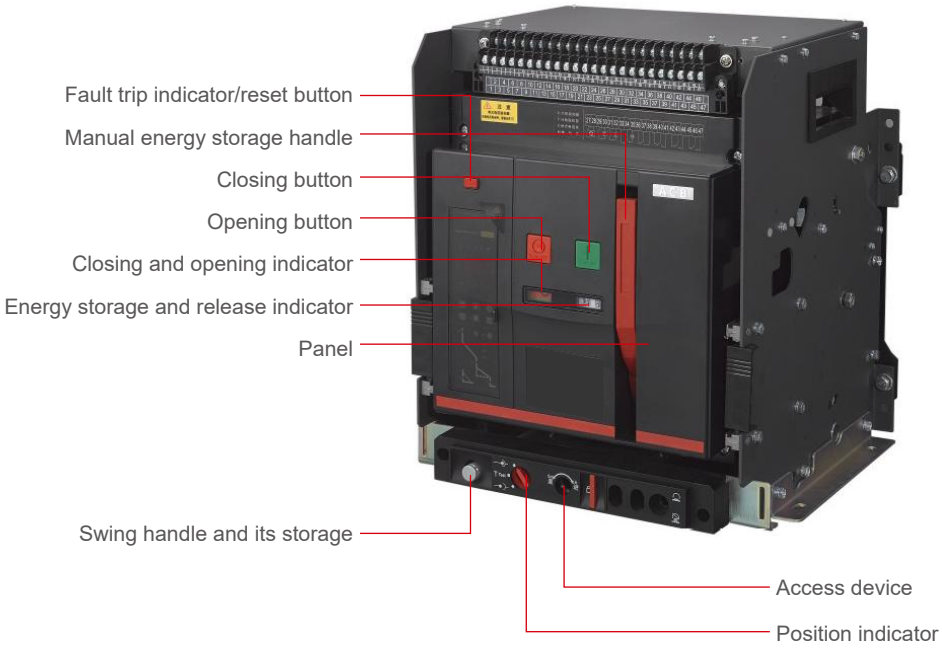

Technical data and performance

The rated current of the circuit breaker is shown in the table below

Table 1

Rated frame current Inm(A)	Rated current In(A)
2000	400, 500, 630, 800, 1000, 1250, 1600, 2000
3200	2000, 2500, 2900, 3200
4000	3200, 3600, 4000
6300	4000, 5000, 6300

The arc distance of the circuit breaker is “zero” (i.e. there is no flashover outside the circuit breaker)
The rated short-circuit breaking capacity and short-term withstand current of the circuit breaker are shown in the table below

Table 2

Rated frame current Inm(A)		2000	3200	4000	6300
Rated ultimate short circuit breaking capacity Icu (kA) O-CO	400V	80	100	100	120
	690V	50	80	80	80
Rated service short circuit breaking capacity Ics(kA) O-CO-CO	400V	65	80	80	100
	690V	40	65	65	70
Rated short time withstand current Icw(kA)/1s O-CO	400V	65	80	80	100
	690V	40	65	65	70

Note: The breaking capacity in the table is the same for the upper and lower incoming lines

B

Intelligent Overcurrent Controller Protection Characteristics and Functions

Overcurrent Protection Characteristics of the Controller

a. The setting value H (/1) and error of the controller are shown in the following table.

Table 3

Long-time Delay	Short-time Delay		Instantaneous		Ground Fault	
I_r1	I_r2	Error	I_r3	Error	I_r4	Error
$(0.4 - 1)I_1$	$(1.5 - 15)I_1$	±10%	I_n ~ 50kA (I_{nm}=2000A); I_n ~ 75kA (I_{nm}=3200A ~ 4000A); I_n ~ 100kA (I_{nm}=6300A)	±15%	$0.2 - 1.0I_n$	±10%

Note: When three-stage protection is required at the same time, the setting values must not overlap.

b. The inverse - time action characteristic of long - time delay overcurrent protection is TL=(1.5Ir)2t1, and the action time at (1.05~2.0)Ir is shown in Table 4. Its time error is ±15%.

Table 4

1.05Ir	1.30Ir	1.5Ir setting time t1 (s)	15	30	60	120	240	480
> 2h no action	< 1h action	2.0Ir setting time (s)	8.4	16.9	33.7	67.5	135	270

Note: t1: Setting time for long - time delay at 1.5Ir; TL: Action time for long - time delay.

c. The protection characteristics of short - time delayed overcurrent are shown in the following table 5.

The short - time delayed overcurrent protection is of definite time limit. If a low multiple is required to be of inverse time limit, its characteristic shall follow Ti=(8Inl)2t0, where t0 is the design time for general delay. When the overload current >8In, it automatically switches to the definite time limit characteristic, and its definite time limit characteristic is shown in Table 6. The time limit error is ±15%.

Table 5

Delay time (s)				Reset time (s)			
0.1	0.2	0.3	0.4	0.06	0.14	0.23	0.35

d. The overcurrent release protection characteristic is shown in Figure 1, and the earth fault protection characteristic is shown in Figure 2.

Operation and Functions of the M-Type Intelligent Controller

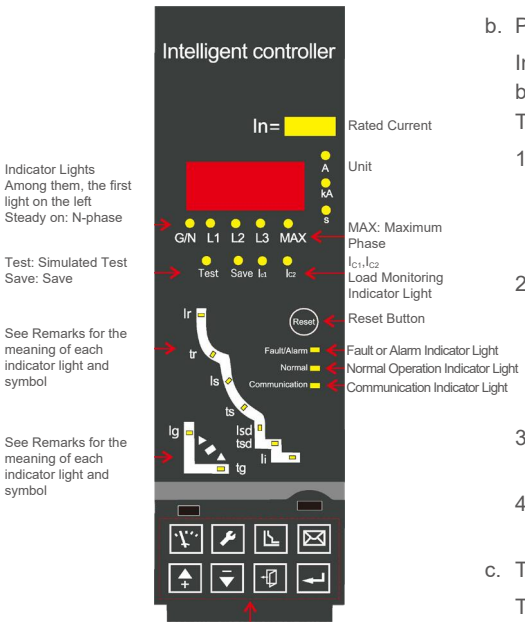

Key Function Description

- “Measure” Key: Used to switch to the “Measurement” interface(Acts as the “Left” key in the password input interface)
- “Set” Key: Used to switch to the “System Parameter Setting” interface(Acts as the “Right” key in the password input interface)
- “Protection” Key: Used to switch to the “Protection Parameter Setting” interface
- “Info” Key: Used to switch to the “Information Record” interface
- “Up” Key: Used to move the cursor upward or adjust parameters upward
- “Down” Key: Used to move the cursor downward or adjust parameters downward
- “Return” Key: Used to return to the previous menu, cancel the selection of current parameters, or return to the main interface
- “Enter” Key: Used to enter the next-level menu pointed to by the current item, select current parameters, or save parameters

Operation and Use of Type M Intelligent Controller

a. Query of Operating Parameters

When the controller is in normal operation, press the “ ” key to cyclically display the current values of L1, L2, L3, G (ground), N, and MAX, with the corresponding indicator lights turning on.

b. Parameter Setting

In the normal operation state of the controller, various parameters of the controller can be set using the function keys such as “ ” on the controller panel. The basic steps are as follows:

1. Press the “ ” key continuously to cyclically check all setting parameters of the controller. When a certain parameter is checked, the original setting value of the parameter is displayed on the screen, and the corresponding yellow light on the panel turns on. If no change to this parameter is needed, continue pressing the setting key.
2. If it is necessary to change the original setting parameter, press the “ ” or “ ” key continuously or in a tapping manner. During this process, continuous pressing enables rapid adjustment of the setting value with a carry of ten digits, while tapping enables single-digit adjustment of the value, until the required value is displayed on the screen.
3. After adjusting to the required value, press the “ ” key. At this time, the “Save” light flashes to save the newly set parameter.
4. If no further changes to other characteristic protection items are needed, press the “ ” key to exit the setting state and return to the normal operation state.

c. Test Operation

The controller can perform simulated characteristic tests for grounding, long delay, short delay, and instantaneous operation. If during the test, a fault requiring actual protection (such as overload or short circuit) occurs, the system will automatically terminate the test state and switch to the delay action state. The basic steps of the test operation are as follows:

1. Press the “ ” key continuously to set the value of the test item.
2. After selecting the test item, press the “ ” key or “ ” key continuously to adjust the operating current value for the test, so that the displayed current value is not less than the set value.
3. After setting the simulated operating current, press the “ ” key. At this time, the “Test” light turns on. After the delay ends, the screen displays the tripping delay time and the test tripping current.
4. To end the test in the test tripping state, press the “ ” key, and the controller returns to the working operation state.

d. Fault Checking Operation

After the controller sends a tripping signal, the circuit breaker trips, and the controller enters the fault display state. At this time, press the “ ” key repeatedly to display the fault current and fault time in turn, while the indicator lights on the panel indicate the fault type. Press the “ ” key to exit the current fault display and enter normal operation.

If you want to check the last tripping situation in the normal operation state, you can press the “ ” key to view the relevant operation fault record.

e. Forced Reset

When the controller is in a fault state or other key operation states, pressing the “ ” key will exit the current state and return to the normal operation state.

B

L_{nm}: Frame size current of the circuit breaker matched with the controller

L_R: Long-delay setting value (light on indicates a fault)

L_{Sd}: Short-delay definite-time setting value (light on indicates a short-circuit short-delay fault)

L_d: Grounding setting value (light on indicates asymmetric grounding or neutral line fault)

t_s: Short-delay inverse-time setting operation time

t_G: Grounding setting operation time

L_n: Rated current of the controller matched with the circuit breaker

L_s: Short-delay inverse-time setting value

L_i: Instantaneous setting value (light on indicates a short-circuit instantaneous fault)

t_r: Long-delay setting operation time

t_{Sd}: Short-delay definite-time setting operation time

T: Actual tripping operation time of the controller

- Load Monitoring Function

  Two setting values are set. The setting range of I_k is (0.2 - 1)I_n, and the setting range of I_n is (0.2 - 1)I_n. The time characteristic of I_k is an inverse-time characteristic, and its time setting value is 1/2 of the long-time delay setting value. There are two types of I_n delay characteristics: the first is the inverse-time function, whose time setting value is 1/4 of the long-time delay setting value; the second is the definite time limit, whose delay time is 60s. For these two delay functions, the former is used to disconnect the unimportant loads at the lower level when the current is close to the overload setting value; the latter is used to disconnect the unimportant loads at the lower level with a delay when the current exceeds the I_n setting value, so that the current decreases and the main circuit and important load circuits are protected for power supply. When the current decreases to I_k, after a certain time delay, a command is sent to connect the circuits at the lower level that have been disconnected again, so as to restore the power supply of the entire system. Users can choose either of the two monitoring protections. The monitoring characteristics are shown in Figure 3 and Figure 4.

- MCR (Making and Breaking Capacity) Tripping and Simulated Tripping Protection can be enabled or disabled according to user requirements, and it is generally necessary to disable them during short-time breaking tests.

  1. 1.MCR making and breaking protection is mainly used when the circuit is closed in the line fault state (instant when the control circuit is powered on). The controller has the function of breaking the circuit breaker at low short-circuit current. The factory setting is 10kA with an error of ±20%, and the set current can be determined according to user requirements.
  2. The controller is equipped with a function that when an extremely large short-circuit current occurs, the signal is directly sent to the tripping signal without being processed by the main chip.

- Thermal Memory Function

  After the controller experiences overload or short circuit, before the controller is powered off, it has a memory function simulating the characteristics of the bimetallic strip. The overload energy is released after 30 minutes, and the delay energy is released after 15 minutes. If an overload or short-time delay fault occurs during this period, the tripping time will be shortened. When the controller is powered off, the energy is automatically cleared.

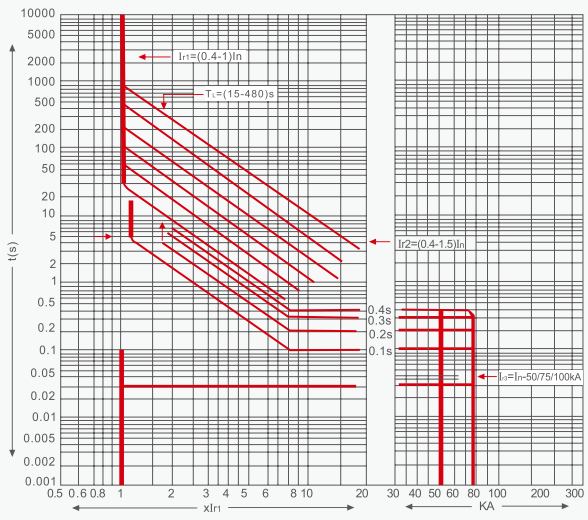

Figure 1

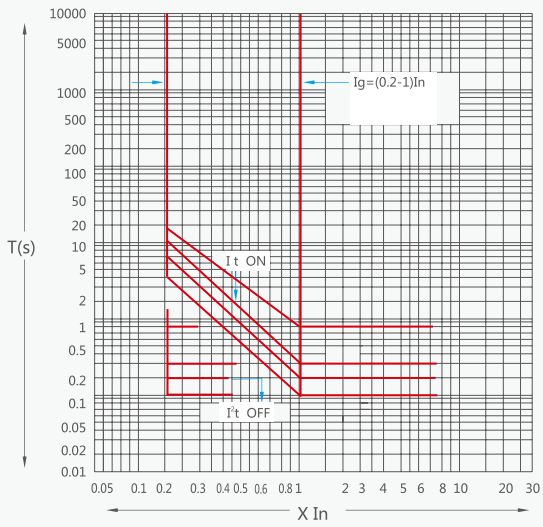

Figure 2

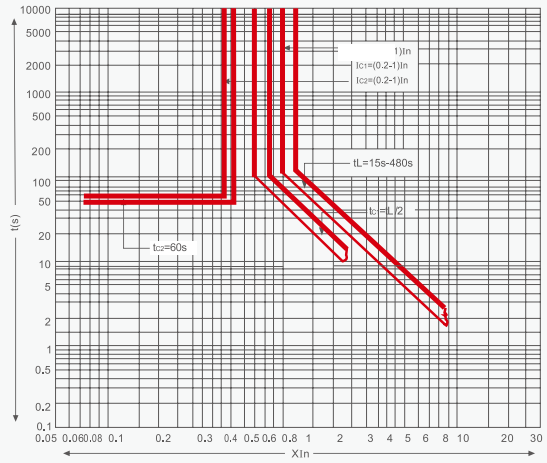

Figure 3

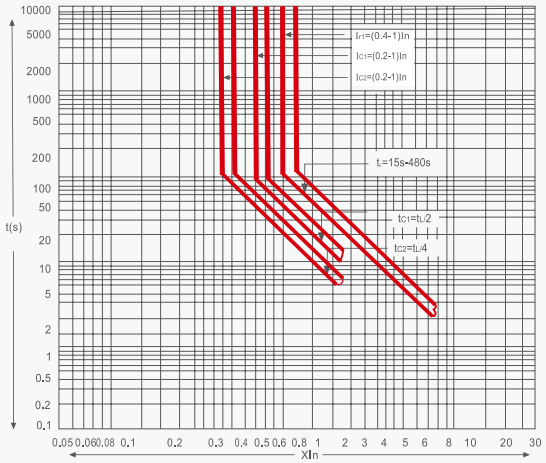

Figure 4

Operation, Use and Functions of Type H Intelligent Controller

In addition to all the functions of Type M, it is also equipped with a serial communication interface. Through the communication interface, a master-slave structured network system (hereinafter referred to as the system) can be formed. The system consists of 12 computers as the master station, and intelligent circuit breakers or other communicable components as the slave stations. The system network structure is as follows: for the circuit breaker unit, the system can realize the remote “four-remote” functions: monitoring of various power grid parameters and operation parameters, display of the current operation state of the intelligent circuit breaker, adjustment and download of various protection setting parameters, and opening/closing operation control of the intelligent circuit breaker. The system is suitable for the construction and transformation of power distribution monitoring systems in various power stations, power plant power consumption, medium and small substations, industrial and mining enterprises, buildings, etc.

The connection diagram of the dedicated communication protocol interface is as follows:

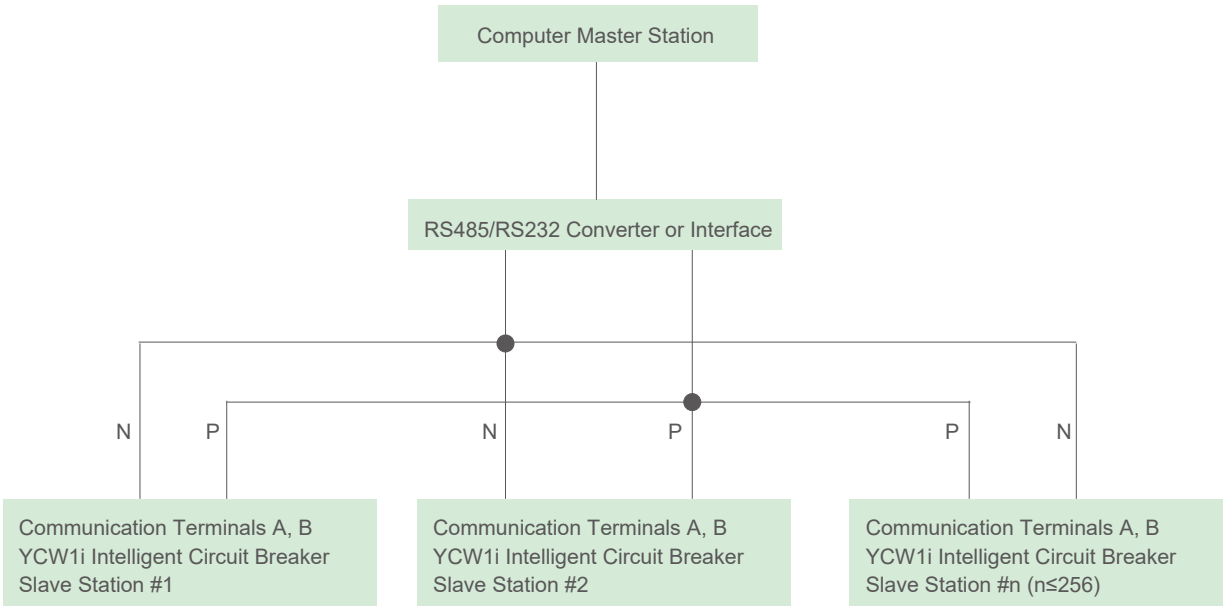

YCW1i Air Circuit Breaker

The connection diagram of the circuit breaker product based on the general DP protocol is as follows

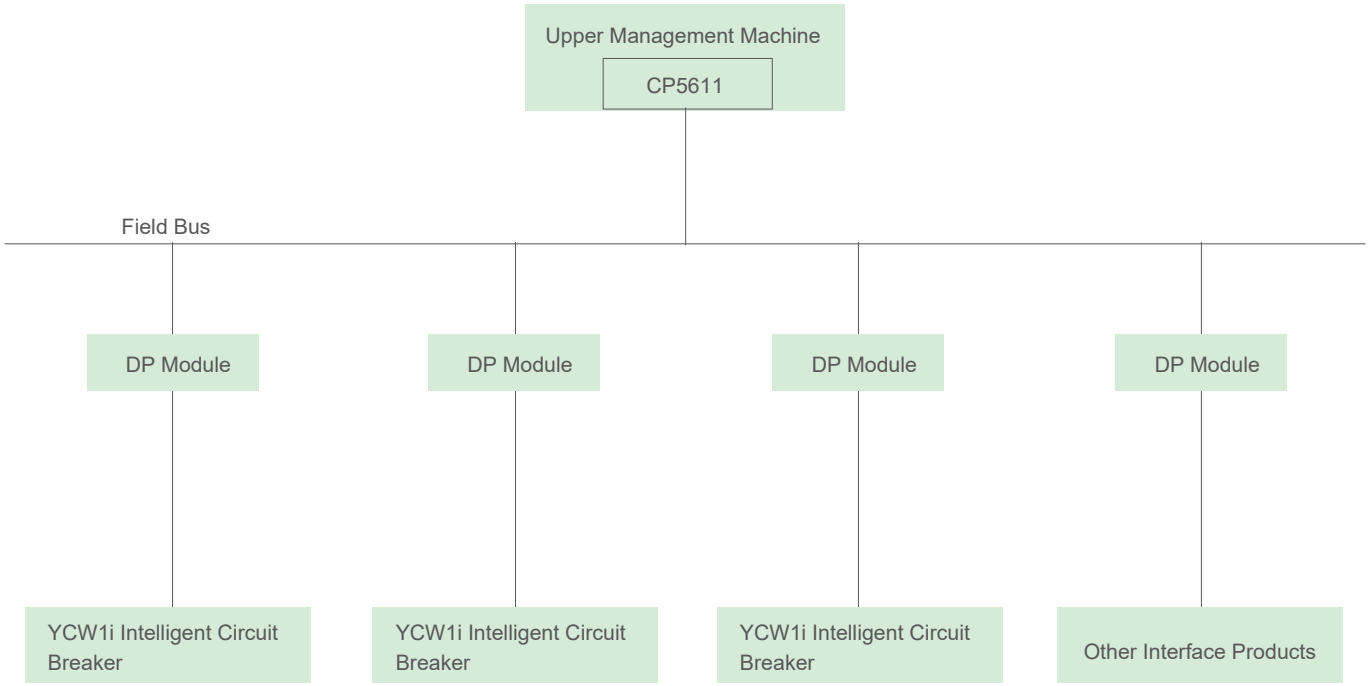

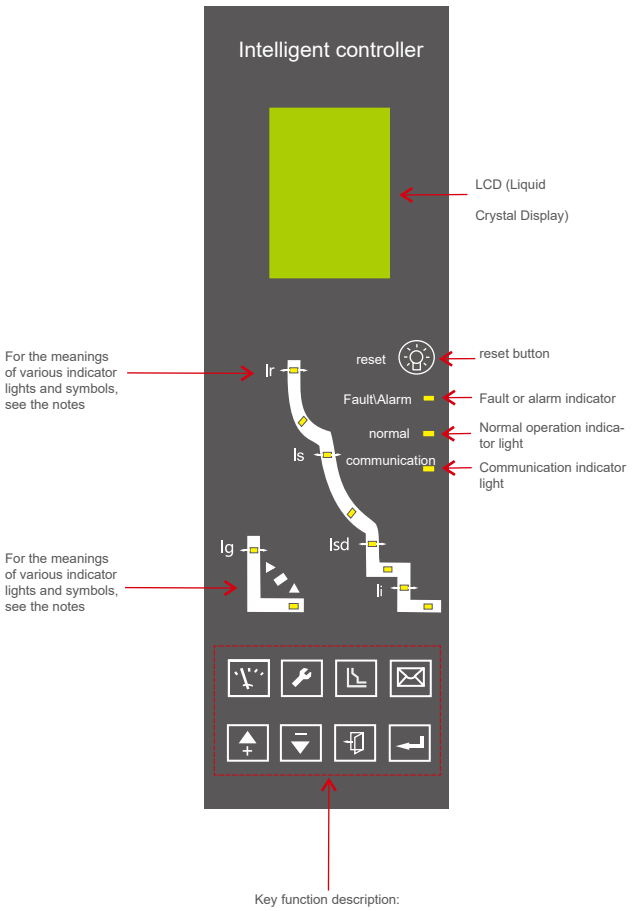

"Measure" Key: Used to switch to the "Measurement" interface(Acts as the "Left" key in the password input interface)

"Set" Key: Used to switch to the "System Parameter Setting" interface(Acts as the "Right" key in the password input interface)

"Protection" Key: Used to switch to the "Protection Parameter Setting" interface

"Info" Key: Used to switch to the "Information Record" interface

"Up" Key: Used to move the cursor upward or adjust parameters upward

"Down" Key: Used to move the cursor downward or adjust parameters downward

"Return" Key: Used to return to the previous menu, cancel the selection of current parameters, or return to the main interface

"Enter" Key: Used to enter the next-level menu pointed to by the current item, select current parameters, or save parameters

a. System Composition

1. Hardware Structure of the Data Communication Network System
   The intelligent circuit breaker provides a standard RS485 communication interface, which is connected from the 1011 terminal of the circuit breaker. The communication medium for system connection: Class A shielded twisted pair.
2. Main Network Characteristics
   Two-way serial data transmission mode. The product can provide multiple communication protocol modes: "Low-Voltage Electrical Equipment Data Transmission Communication Protocol V1.0", PROFIBUS-DP, MODBUS, etc.
   Strict master-slave mode, that is, the master station is the initiator and controller of communication, and the slave station can only communicate with the master station and cannot directly communicate with other slave stations.
   The communication baud rate is 9600 bit/s, and the communication distance is 1.2 km. For PROFIBUS-DP communication, the typical application baud rate can reach 187.5 kbit/s.
3. Monitoring Software
   The intelligent control software can realize the configuration application of the required monitoring and management software according to different engineering requirements. For the intelligent circuit breaker, it can realize operation monitoring, operation and various daily management functions.

b. System Functions

1. Remote Control
   Remote control refers to the operation control of energy storage, closing and opening of each slave station circuit breaker in the system through the master station computer. The operator selects the corresponding object from the system interface, clicks the remote control button with the mouse, and the system will display the current operation state of the corresponding object. After the operator enters the operation password, he can send the remote control "close" or "open" command. The system will transmit the command to the corresponding circuit breaker slave station. After receiving the command, the slave station will perform opening, closing, energy storage and other operations according to the specified sequence and report the result of the remote control to the master station.
2. Remote Setting
   Remote setting refers to the setting of the protection setting values of the slave stations through the master station computer. The master station computer stores the protection setting value table of all slave stations. The operator selects the corresponding object from the system interface, clicks the remote setting button with the mouse, and the system will display the current setting of the protection setting value to be set for the corresponding object and the protection setting value table of the object. After the operator enters the operation password, he can select the required parameters from the parameter table, and then click the corresponding button. The master station will download the parameters to the corresponding slave station and report the result of the remote setting. After receiving the command, the slave station will modify its own protection setting value.
3. Remote Measurement
   Remote measurement refers to the real-time monitoring of the power grid operation parameters of each slave station through the master station computer. The communication sub-station reports the working parameters to the upper computer as follows: real-time phase current values of A, B, C, N of each sub-station, voltage values of U_{AB}, U_{BC}, U_{CV}, etc.
   The fault record can record the following fault parameters: phase

B

current values of A, B, C, N at the time of fault, voltage values of U_{AB}, U_{BC}, U_{CV}, fault type, fault action time, and record the fault in the fault database.

The computer displays the current real-time current and voltage of each sub-station in the form of bars, absolute value tables, etc., and displays the operation status of each node in real time in the form of a line diagram.

4. Remote Communication
   Remote communication refers to viewing the model, closing/opening state, various protection setting values, and operation and fault information status of the slave stations through the master station computer. The parameters reported by the slave station circuit breaker to the upper computer mainly include: switch model, switch state (closed/open), fault information, alarm information, various protection setting values, etc.
5. Other System Functions
   In addition to the four-remote operation control functions, the system can also perform various management functions: fault alarm (information prompt, interface pop-up, event printing, fault code, sound alarm), event recording, maintenance tagging, shift handover management, load trend analysis, various report printing, etc.

Operation Performance of the Circuit Breaker

The operation performance of the circuit breaker is represented by the number of operation cycles.

Table7

Frame Rating Current I_{nm} (A)	Total Number of Operation Cycles
2000	500 times with electricity + 2500 times without electricity
3200, 4000	500 times with electricity + 2000 times without electricity
6300	500 times with electricity + 500 times without electricity

Release, Undervoltage Release, Electric Operating Mechanism, Release (Closing) Electromagnet of the Circuit Breaker

Working Voltage and Required Power of the Short-Circuit Controller

Table8

Item	Required function	Rated Working Voltage	AC 50Hz		DC	
			220V	380V	110V	220V
Shunt Release			24VA	36VA	24VA	24VA
Undervoltage Release			24VA	36VA		
Closing Electromagnet			24VA	36VA	24VA	24VA
Electric Operating Mechanism	Frame Rating Current	2000A	85VA	85VA	85VA	85VA
		3200A, 4000A	110VA	110VA	110VA	110VA
		6300A	150VA	150VA	150VA	150VA
Power Supply Voltage of the Intelligent Controller			AC220V, AC380V, DC220V, DC110V			

Note:The reliable action voltage of the shunt release and undervoltage release is 70% - 110% of the rated voltage. The reliable action voltage of the closing electromagnet and operating mechanism is 85% - 110% of the rated voltage.

Performance of the Undervoltage Release of the Circuit Breaker

Table9

Category		Under-Voltage Delay Release	Under-Voltage Instantaneous Release
Release Action Time		Delay 1, 3, 5s	Instantaneous
Release Action Voltage Value	35% - 70% Ue	Circuit breaker can be reliably opened	
	≤35% Ue	Circuit breaker cannot be closed	
	(85 - 110%) Ue	Circuit breaker can be reliably closed	
If the power supply voltage returns to 85% Ue within 1/2 of the delay time		Circuit breaker does not open	-
		Note: The delay time accuracy is ±10%	

Performance of Auxiliary Contacts

The rated heating current of the auxiliary contact is 6A.

Form of auxiliary contact: Four normally open and four normally closed (transfer contact form).

Abnormal Making and Breaking Capacity of the Auxiliary Contact

Abnormal Making and Breaking Capacity of Auxiliary Contacts Under Abnormal Service Conditions

Table10

Service Category	Making			Breaking			Making and Breaking Operation Cycle Times and Operating Frequencyy		
	U/U_e	I/I_e	Cosφ or T0.95	I/I_e	U/U_e	Cosφ or T0.95	Operation Cycle Times	Number of Operation Cycles per Minute	Power-On Time(s)
AC-15	1.1	10	0.3	10	1.1	0.3	10	6 (or consistent with the main contact operation)	0.05
DC-13	1.1	1.1	6Pe	1.1	1.1	6Pe			
Note:When $P_e \leq 50W$, the upper limit of t_0 = 6ms; when $P_e > 50W$, the upper limit of t_0 = 300ms									

Making and Breaking Capacity of the Auxiliary Contact Under Normal Service Conditions

Table11

Service Category	Making			Breaking		
	I/I_e	U/U_e	Cosφ or T0.95	I/I_e	U/U_e	Cosφ or T0.95
AC-15	10	1	0.3	1	1	0.3
DC-13	1	1	6Pe	1	1	6Pe

Open Position Key Lock

The circuit breaker is equipped with an “open position key lock” accessory (provided according to order requirements), which can lock the circuit breaker in the open position. At this time, the circuit breaker cannot be closed by either the closing button or the energy-releasing (closing) electromagnet

YCW1i Air Circuit Breaker

Structural Overview

1. The fixed-type circuit breaker is mainly composed of a contact system, an insulating base, an intelligent controller, a manual operating mechanism, an electric operating mechanism, and a mounting plate .
2. The drawout-type circuit breaker is mainly composed of a contact system, an insulating base, an intelligent controller, a manual operating mechanism, an electric operating mechanism, and a drawout base .
3. The circuit breaker adopts a three-dimensional layout, featuring a compact structure and small size. The contact system is enclosed in an insulating base plate, and the contacts of each phase are also insulated and separated to form individual small cavities; the intelligent controller, manual operating mechanism, and electric operating mechanism are arranged in sequence in front of it to form independent units. If one of the units is damaged, it can be completely removed and replaced with a new one .
4. The drawout-type circuit breaker consists of a plug-in circuit breaker and a drawout base. The guide rails inside the drawout base can be pulled in and out; the plug-in circuit breaker moves in and out of the drawout base along the guide rails, and the main circuit is connected through the insertion connection between the busbar on the plug-in circuit breaker and the bridge contact on the drawout base .
5. The drawout-type circuit breaker has three working positions: “Connected” position, “Test” position, and “Disconnected” position. The position change is achieved by screwing the handle in or out, and the indication of the three positions is displayed through the marks on the cross-beam of the drawout base .
6. When in the “Connected” position, both the main circuit and the secondary circuit are connected; when in the “Test” position, the main circuit is disconnected and insulated, only the secondary circuit is connected, and some necessary action tests can be carried out; when in the “Disconnected” position, both the main circuit and the secondary circuit are completely disconnected. In addition, the drawout-type circuit breaker is equipped with a mechanical interlock function: the circuit breaker can only be closed in the “Connected” position or “Test” position, and cannot be closed in the intermediate position between “Connected” and “Test”.

YCW1i Air Circuit Breaker

The interlock mechanism of the circuit breaker is applicable to both drawout-type and fixed-type breakers. Users can independently use the interlock mechanism to interlock two or three circuit breakers. Two circuit breakers can be optionally equipped with our company's Y-700 intelligent controller, and three circuit breakers can be optionally equipped with the NQ6W intelligent controller to realize automatic switching of dual power supply

Lever interlock

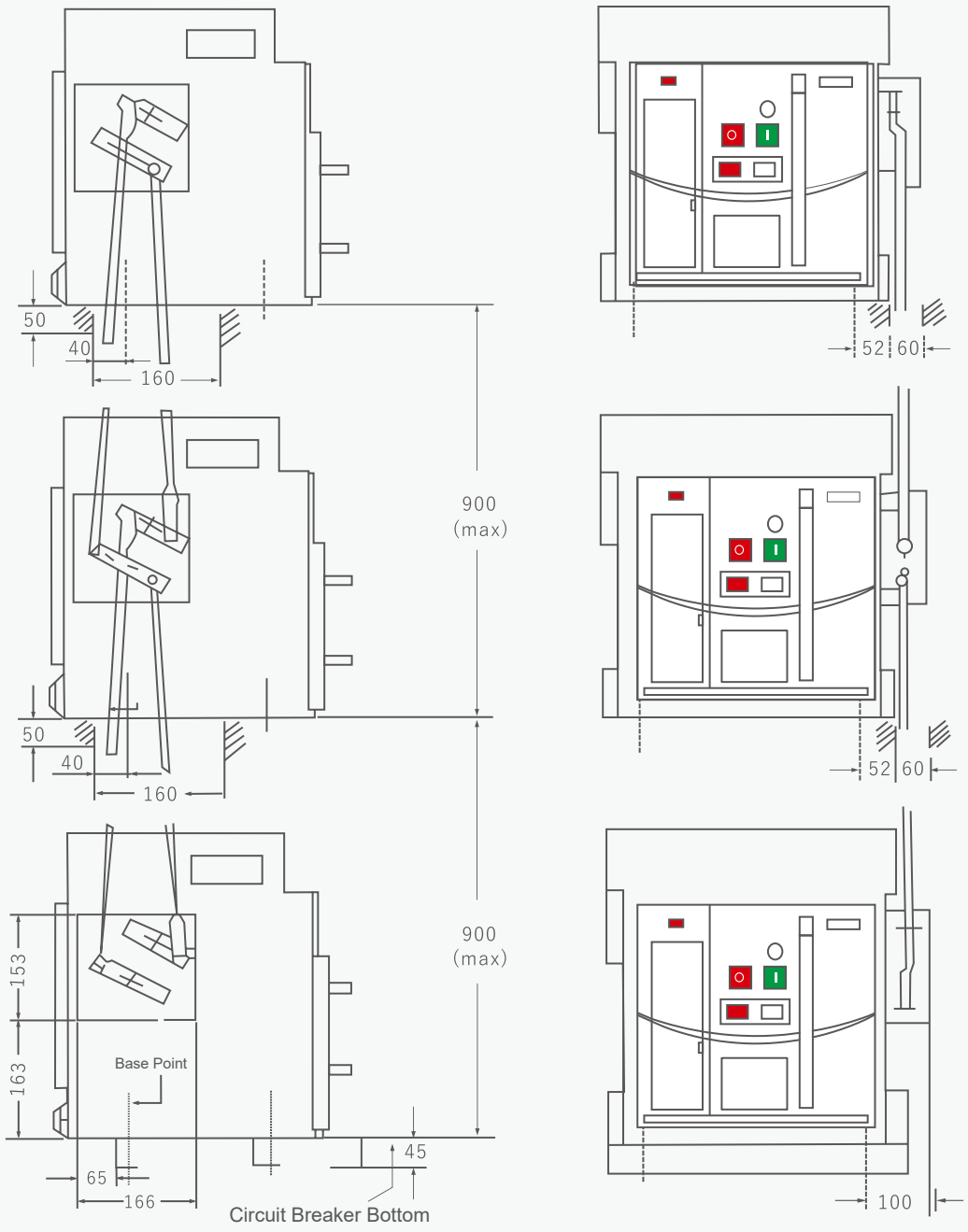

Figure 5 (A)

For 3 vertically installed circuit breakers using lever interlock, if only two circuit breakers need to be interlocked, it is only necessary to remove the topmost circuit breake

B

Soft Interlock (both horizontally and vertically)

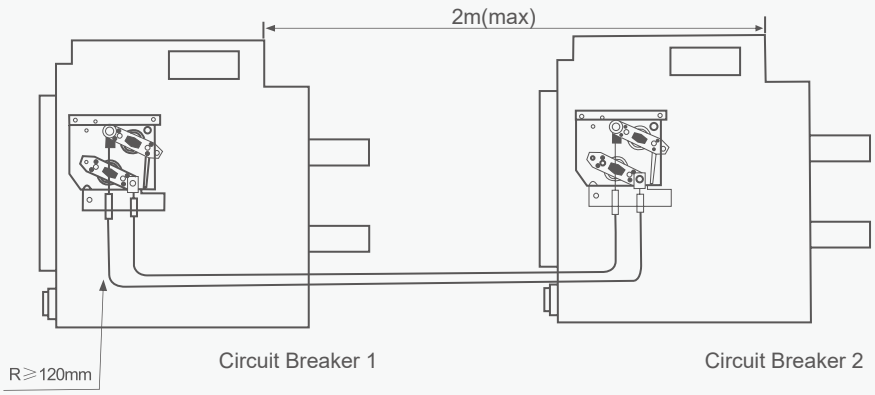

Figure 5 (B)

Earth Fault Protection Circuit

YCW1i Three-Pole Circuit Breaker

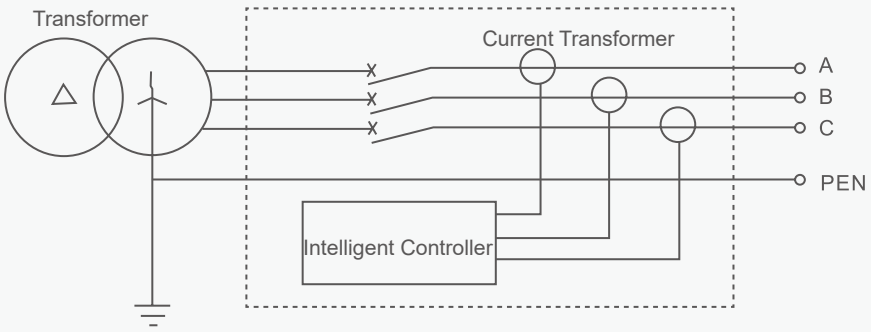

Type 3PT
Signal: Only the vector sum of three-phase currents is taken (for three-phase unbalance detection)

YCW1i Four-Pole Circuit Breaker

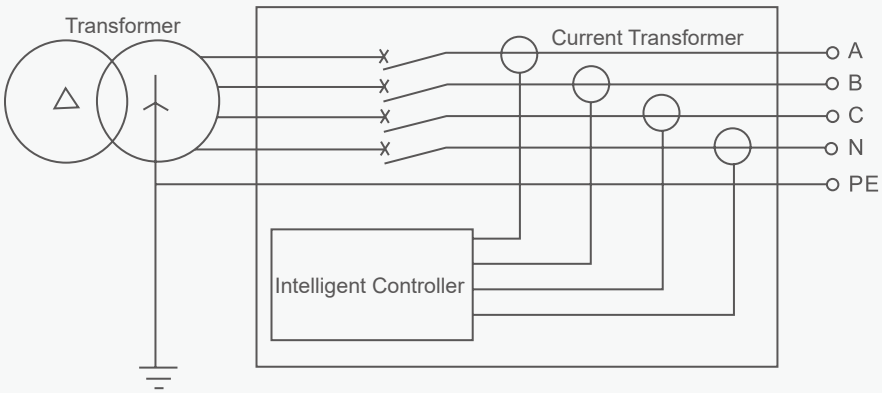

Type 4PT
Differential Type
Earth Fault ProtectionSignal: The vector sum of three-phase currents and N-phase current is taken

YCW1i Air Circuit Breaker

YCW1i Three-Pole Circuit Breaker

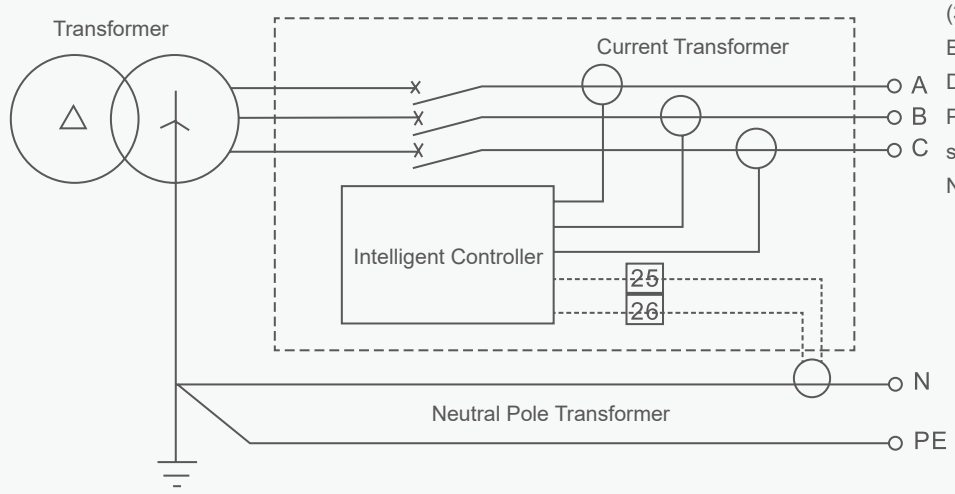

(3P+N)T Type
External Neutral Pole Transformer, Differential Type Earth Fault Protection, Signal: Only the vector sum of three-phase currents and N-phase current is taken.

YCW1i Three-Pole or four-pole Circuit Breaker

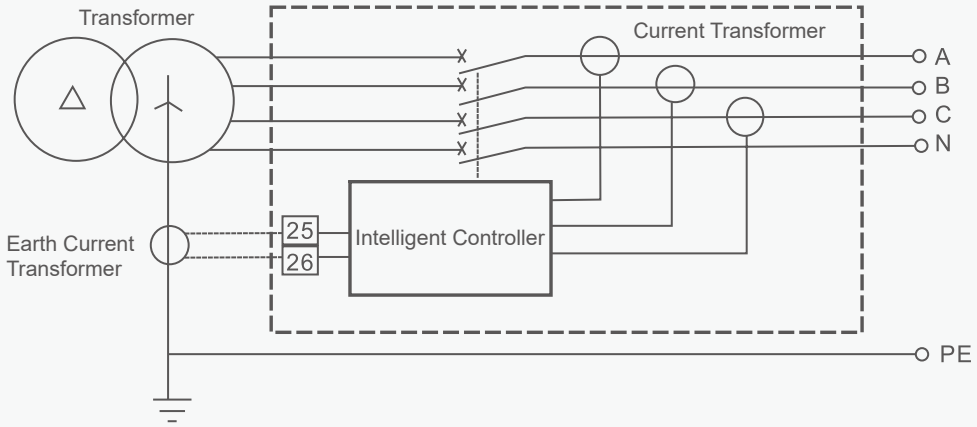

(3P+N)W Type
External Earth Current Transformer, Earth Current Type Earth Fault Protection, Signal: Directly taken between the neutral point of the main power supply and the ground.

External Single-Phase Earth Protection Function

External transformers (neutral pole transformers or earth current transformers) are provided to users as accessories. Users shall install them on the busbar by themselves and connect the wires (with a length of 2m) to terminals #25 and #26 of the circuit breaker's secondary wiring .
The dimensions of the central opening of the external transformer (allowing the maximum passage of the through-busbar) are as follows:

Table12

Transformer Model	Width	Height
YCW1i-2000, YCW1i-4000/4	61	21
YCW1i-3200 and above (except YCW1i-4000/4)	87	31

B

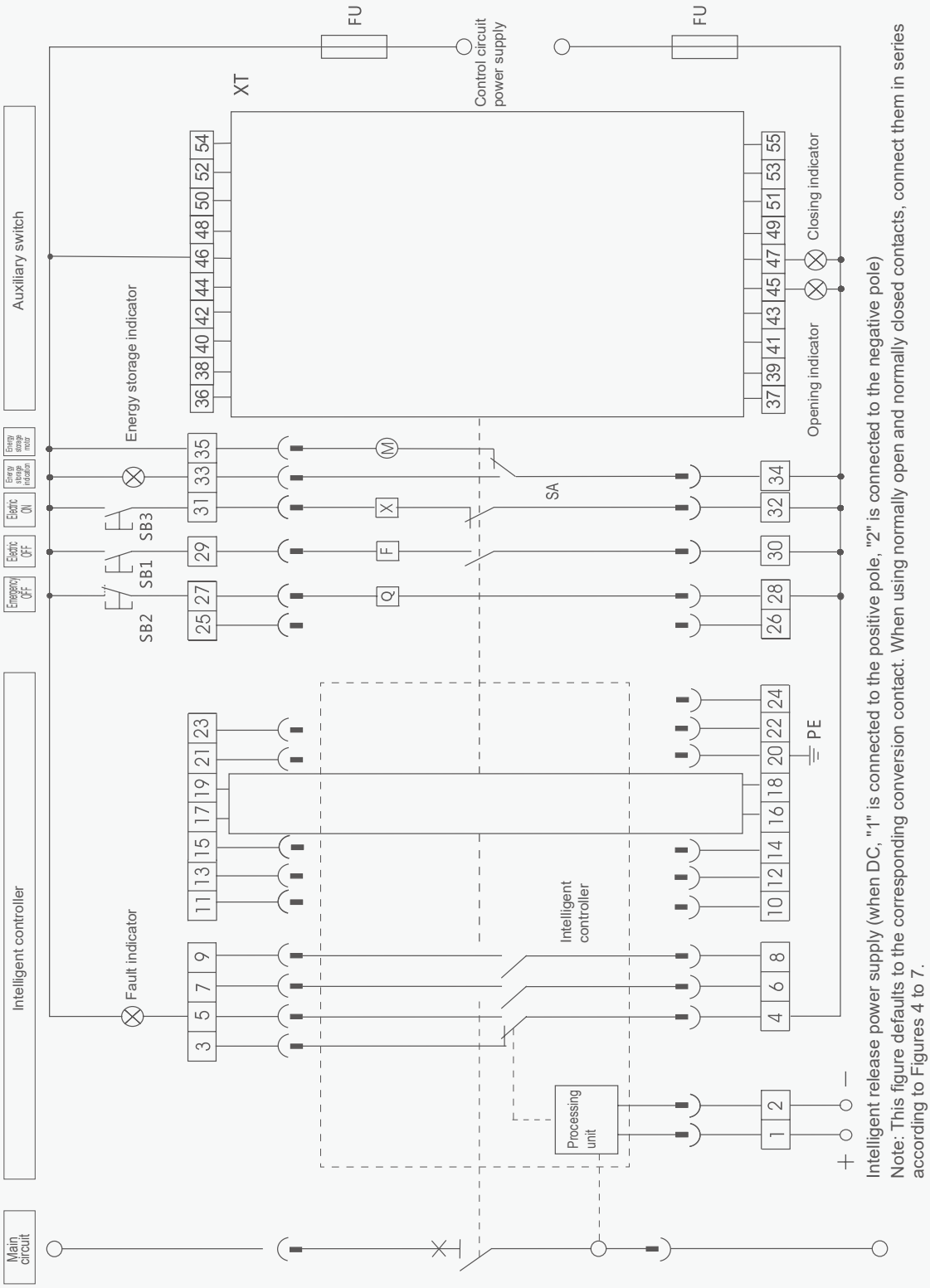

Intelligent release power supply (when DC, "1" is connected to the positive pole, "2" is connected to the negative pole)
Note: This figure defaults to the corresponding conversion contact. When using normally open and normally closed contacts, connect them in series according to Figures 4 to 7.

#1 and #2: controller auxiliary power supply, with #1 as the positive pole when the power supply is DC

#3, #4, #5: fault trip contact output, #4 is a common point

#6~#9: Normally, there are two sets of auxiliary contacts (according to Figure 3 when customizing six sets of conversion contacts, and according to Figure 7 when customizing six normally open and six normally closed contacts)

#10, #11: blank

#12, #13: Load 1 alarm signal output

#14, #15: Load 2 alarm signal output

#16~#19: blank

#20: Protective ground wire

#21~#24: blank

#25, #26: external transformer signal input terminal (blank if none)

#27, #28: undervoltage release power supply (Q)

#29, #30: shunt release power supply (F)

#31, #32: closing electromagnet power supply (X)

#33, #34: energy storage indicator

#34, #35: energy storage motor power supply

SB1 shunt button, SB2 emergency opening button, SB3 closing button,

XT wiring terminal, SA travel switch, FU fuse (6A)

Figure 1

Four sets of conversion contacts (default configuration)

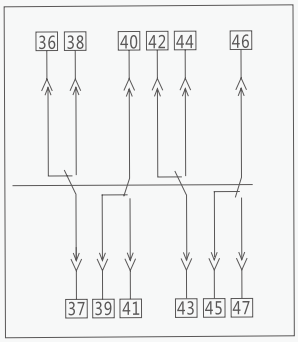

Note:

1. #33 must be connected in series with the indicator light before connecting to the power supply, otherwise it may cause a short circuit in the circuit.
2. A button can be connected in series between #35 and the power supply for manual pre-energy storage.
3. The buttons, indicator lights and fuses in the picture need to be provided by the user.
4. The status of the wiring diagram refers to the circuit breaker opening, no energy storage, and the reset button not popping up.

Figure 1

Five sets of conversion contacts (customized as needed)

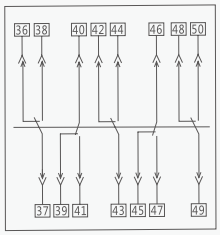

Figure 2

Six sets of conversion contacts (customized as needed)

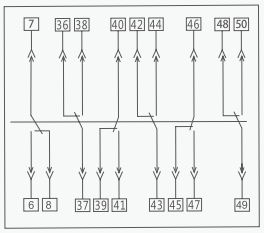

Figure 3

3NO 3NC contacts

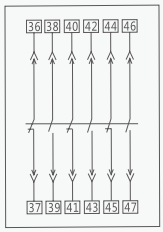

Figure 4

4NO 4NC contacts

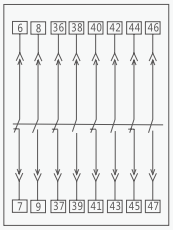

Figure 5

5NO 5NC contacts

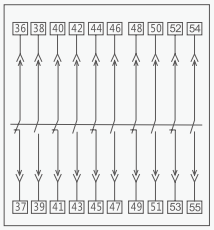

Figure 6

6NO 6NC contacts

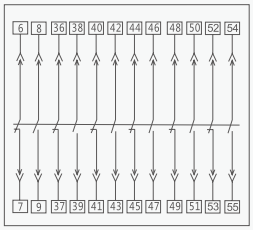

B

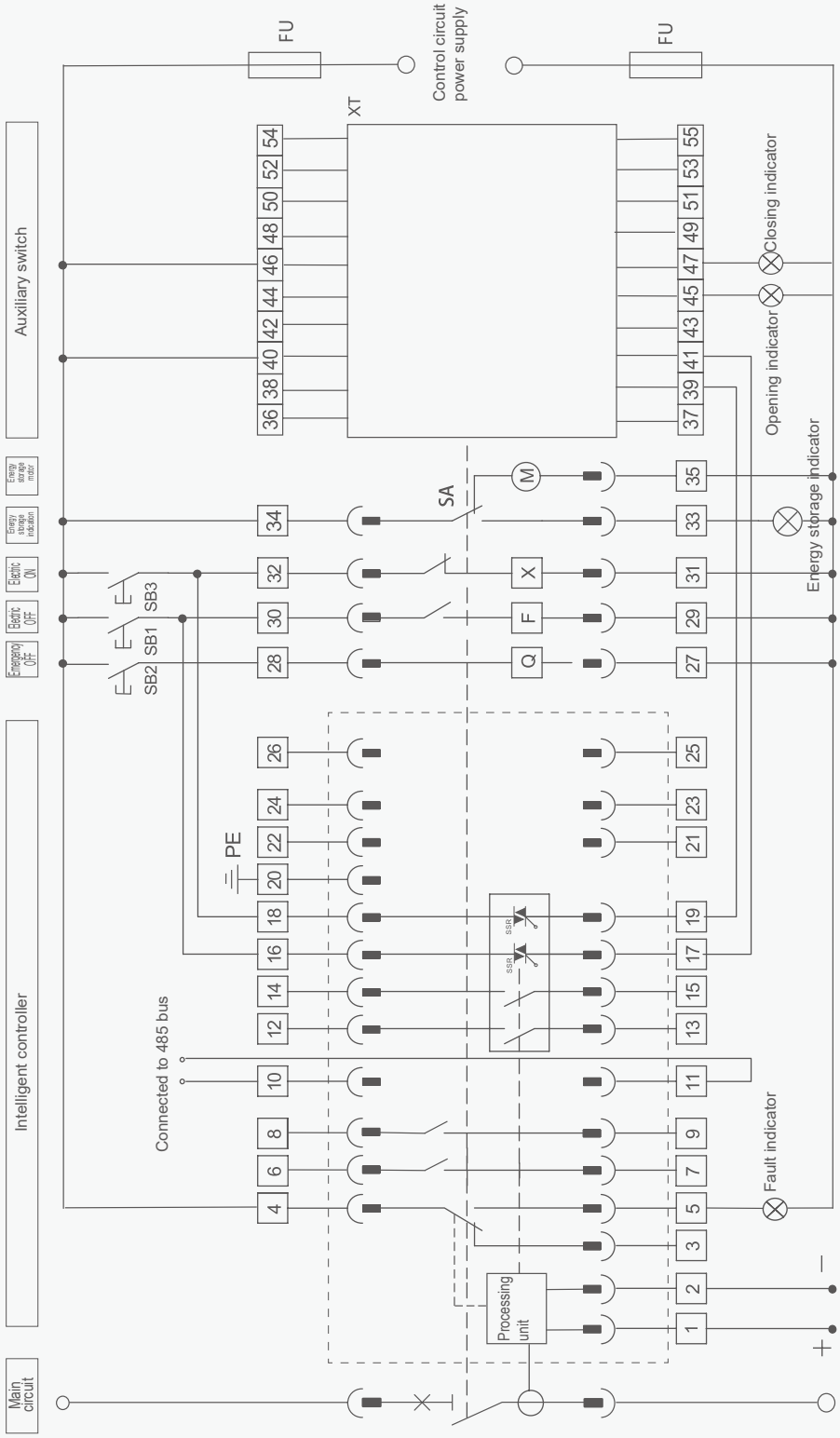

Intelligent release power supply (when DC, "1" is connected to the positive pole, "2" is connected to the negative pole)
Note: This figure defaults to the corresponding conversion contact. When using normally open and normally closed contacts, connect them in series according to Figures 4 to 7.

AC 230V AC 400V
DC 110V DC 220V

#1 and #2: controller auxiliary power supply, with #1 as the positive pole when the power supply is DC

#3, #4, #5: fault trip contact output, #4 is a common point

#6 - #9: normally blank (according to Figure 2 when customizing five sets of conversion contacts)

#10, #11: RS485 communication interface A and B ends

#12, #13: Load 1 alarm signal output

#14, #15: Load 2 alarm signal output

#16 - #17: Remote opening control output (D03 bidirectional thyristor controlled pure electromagnetic coil)

#18 - #19: Remote opening control output (D04 bidirectional thyristor controlled pure electromagnetic coil)

#20: Protective ground wire

#21: N-phase voltage signal input
#22: A-phase voltage signal input
#23: B-phase voltage signal input
#24: C-phase voltage signal input
} (Voltage function required)

#25, #26: external transformer signal input terminal (blank if none)

#27, #28: undervoltage release power supply (Q)

#29, #30: shunt release power supply (F)

#31, #32: closing electromagnet power supply (X)

#33, #34: energy storage indicator

#34, #35: energy storage motor power supply

SB1 shunt button, SB2 emergency opening button, SB3 closing button, XT wiring terminal,

SA travel switch, FU fuse (6A)

Figure 1
Four sets of conversion contacts (default configuration)

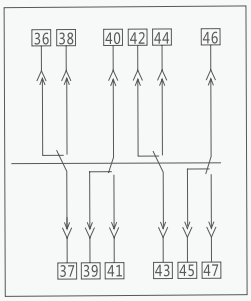

Note:

1. #33 must be connected in series with the indicator light before connecting to the power supply, otherwise it may cause a short circuit in the circuit.
2. A button can be connected in series between #35 and the power supply for manual pre-energy storage.
3. The buttons, indicator lights and fuses in the picture need to be provided by the user
4. The status of the wiring diagram refers to the circuit breaker opening, no energy storage, and the reset button not popping up.

Figure 1
Five sets of conversion contacts (customized as needed)

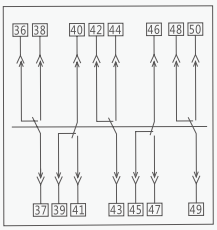

Figure 2
Six sets of conversion contacts (customized as needed)

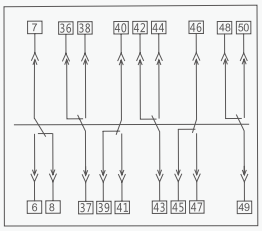

Figure 3
3NO 3NC contacts

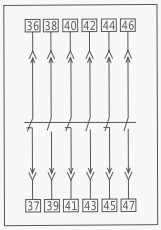

Figure 4
4NO 4NC contacts

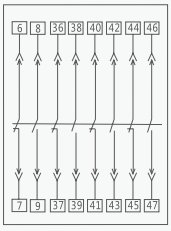

Figure 5
5NO 5NC contacts

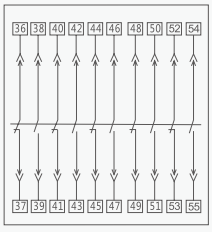

Figure 6
6NO 6NC contacts

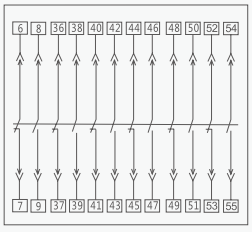

YCW1i Air Circuit Breaker

B

Overall and mounting dimensions(mm)

1. Installation dimension and external dimension of fixed circuit breaker (YCW1i-2000/3, 2000/4)

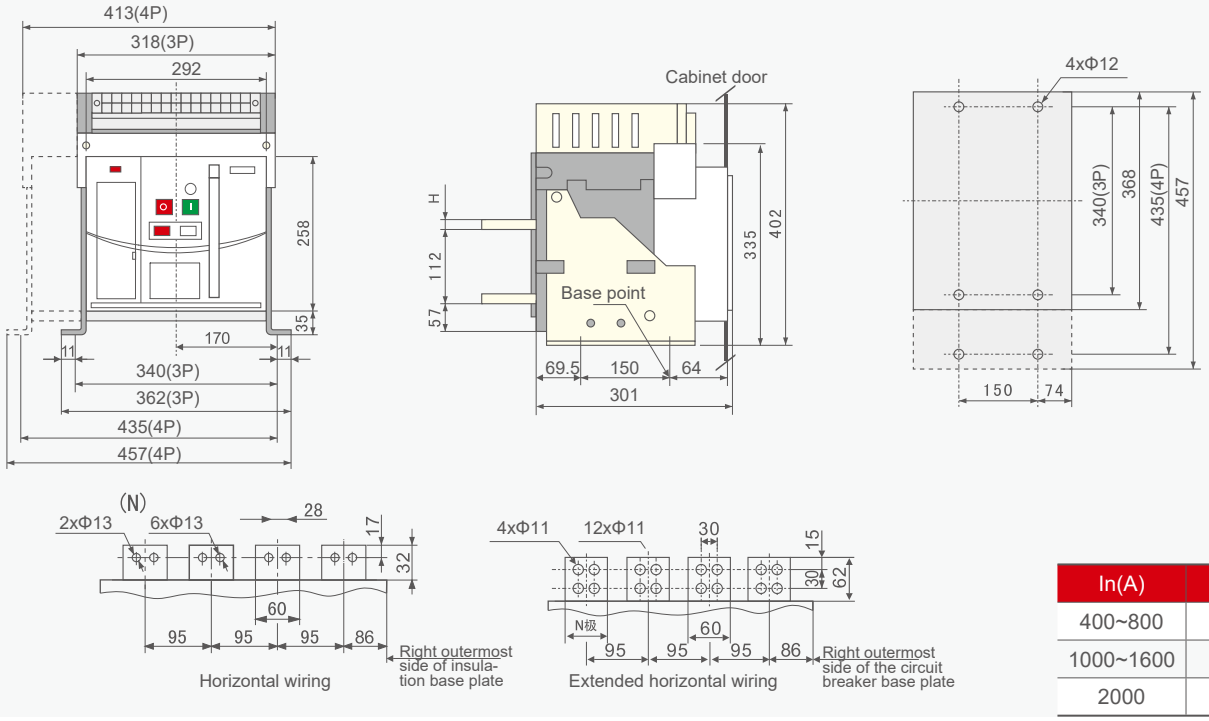

In(A)	H(mm)
400~800	10
1000~1600	15
2000	20

2. Installation and overall dimensions of draw-out circuit breakers(YCW1i-2000/3,2000/4)

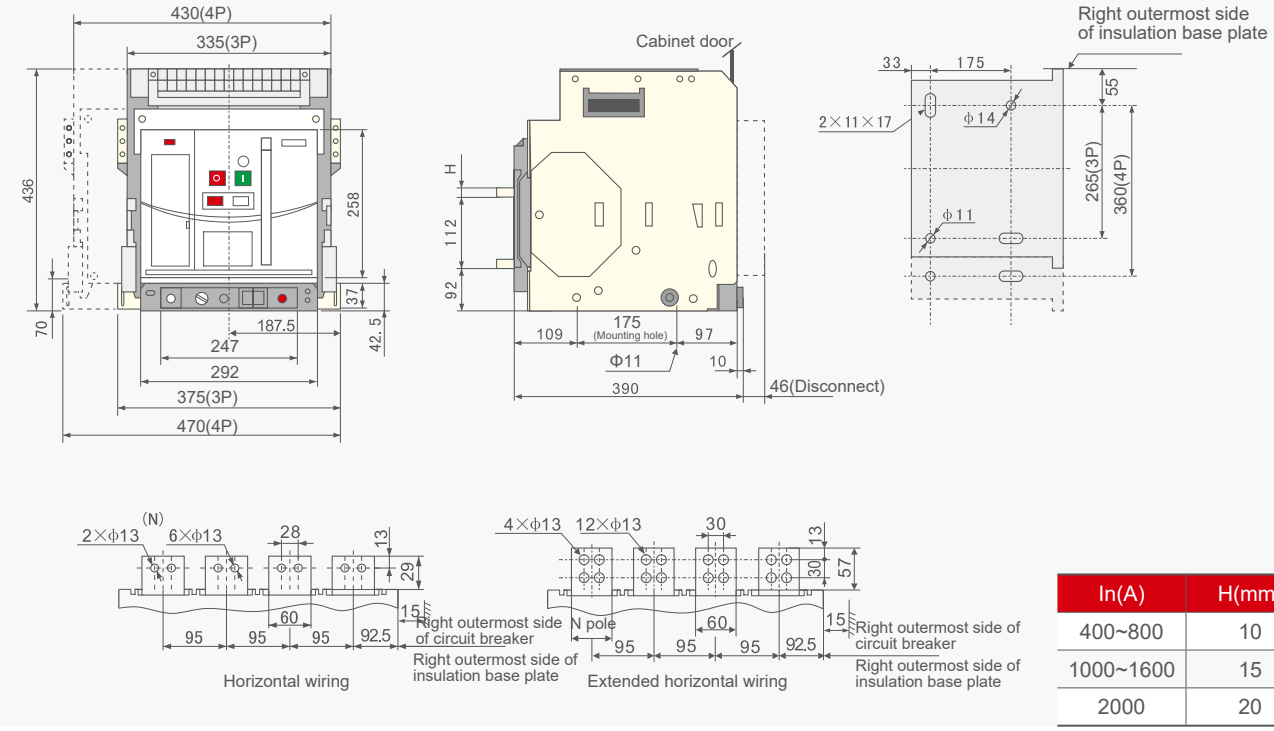

In(A)	H(mm)
400~800	10
1000~1600	15
2000	20

YCW1i Air Circuit Breaker

Overall and mounting dimensions(mm)

3. Installation dimension and external dimension of fixed circuit breaker (YCW1i-3200/3,3200/4)

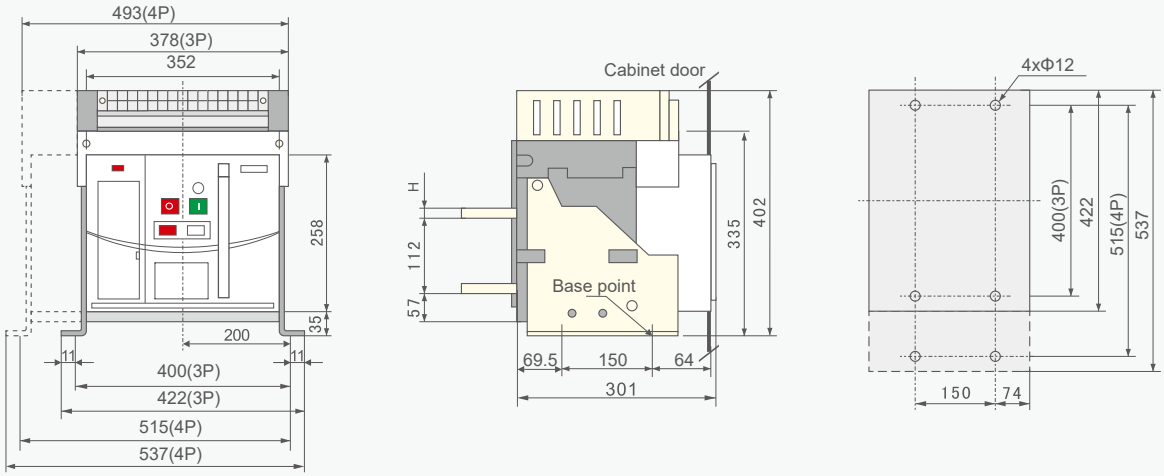

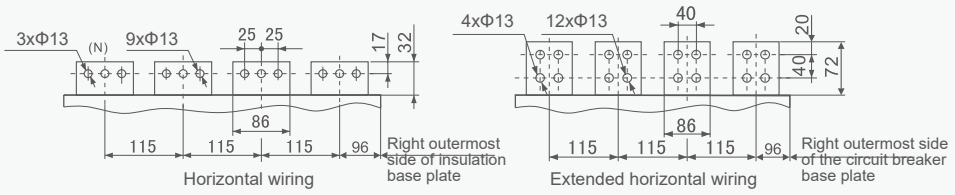

In(A)	H(mm)
2000,2500	20
2900,3200	30

4.Installation and overall dimensions of draw-out circuit breakers

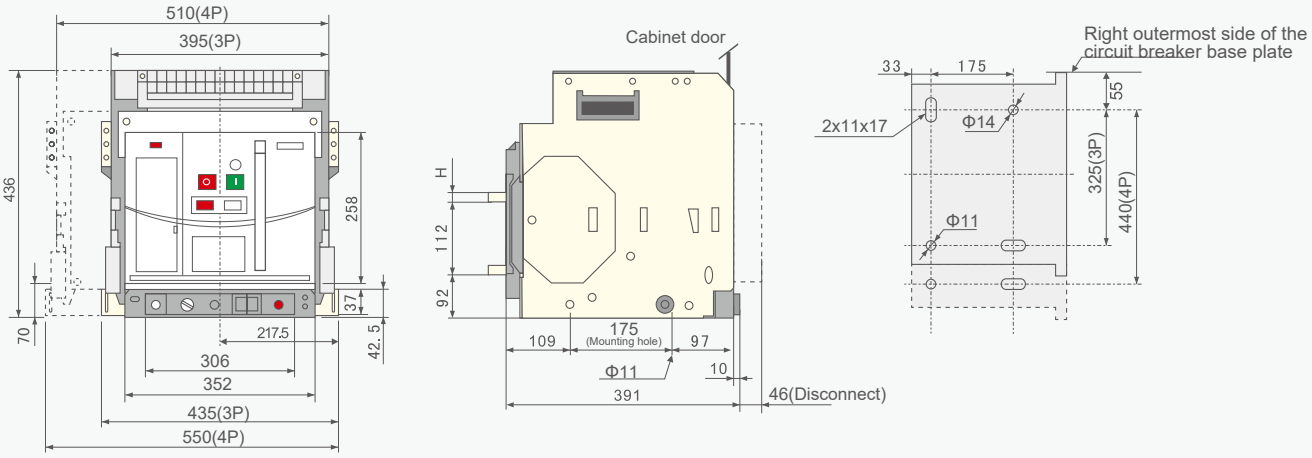

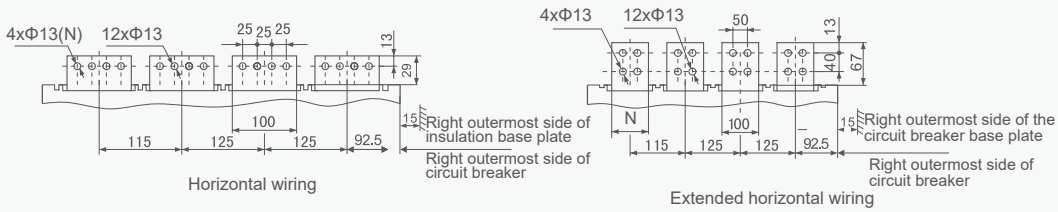

In(A)	H(mm)
2000,2500	20
2900,3200	30

B

5.Installation and overall dimensions of fixed circuit breakers (YCW1i-4000/3)

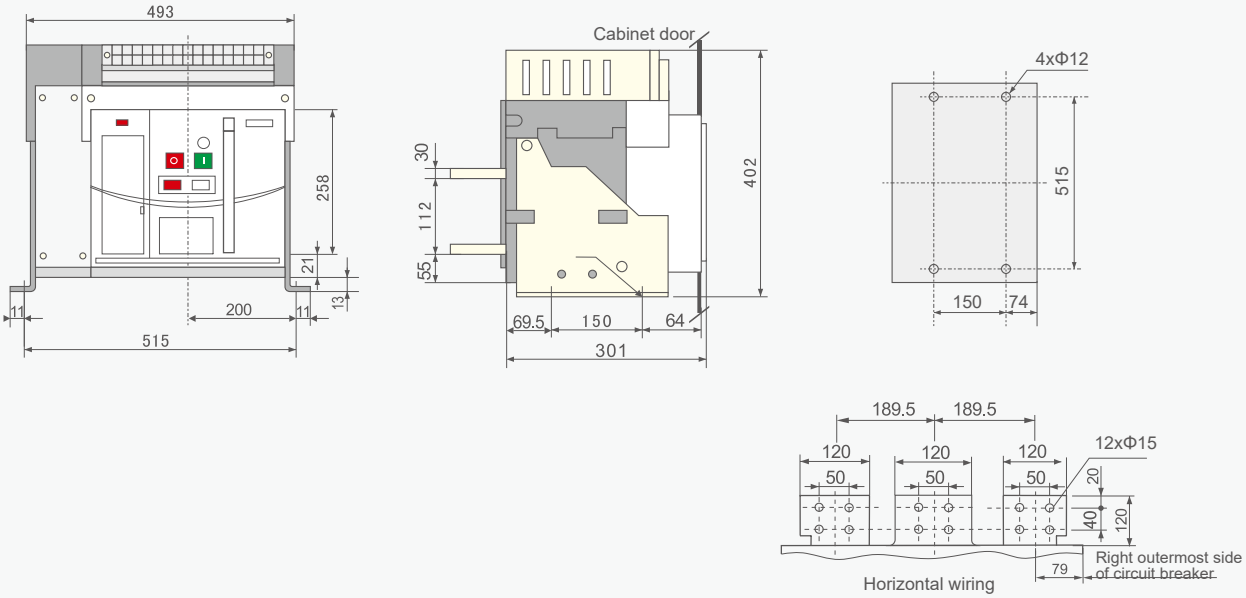

6.Installation and overall dimensions of fixed circuit breakers (YCW1i-4000/4)

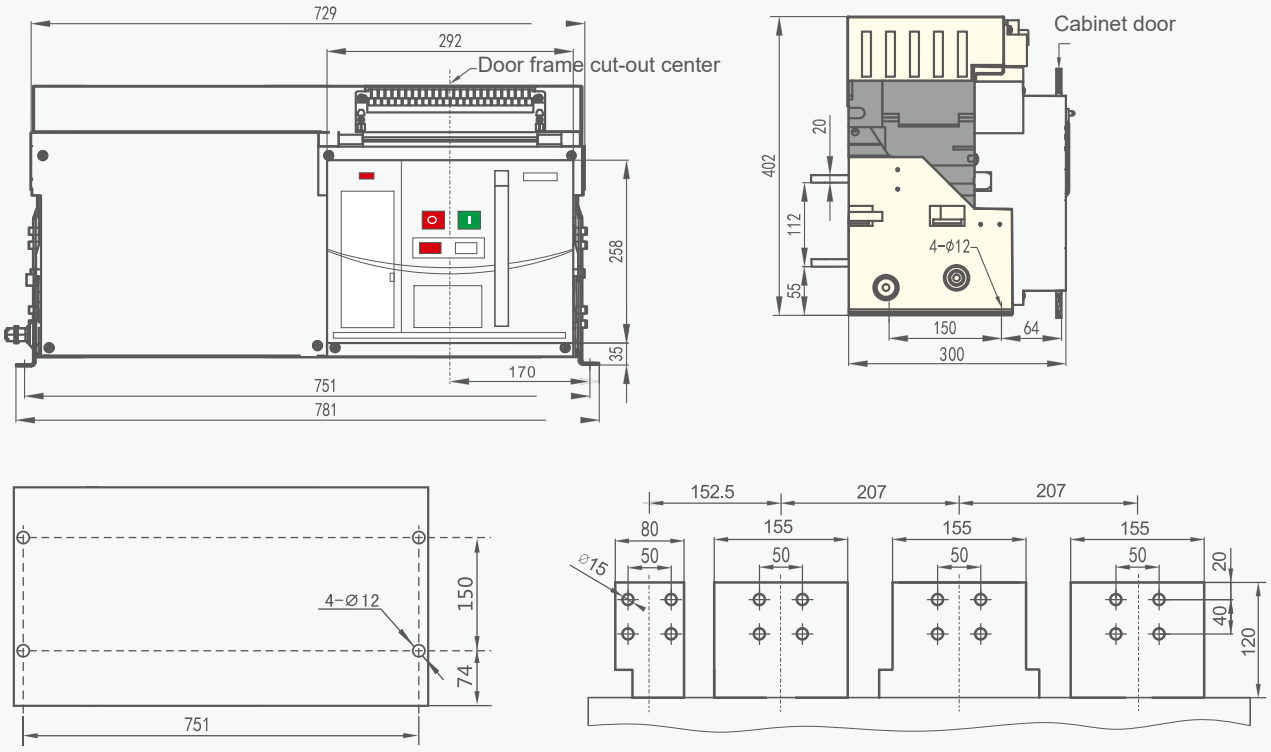

B

7.Installation and overall dimensions of draw-out circuit breakers (YCW1i-4000/3)

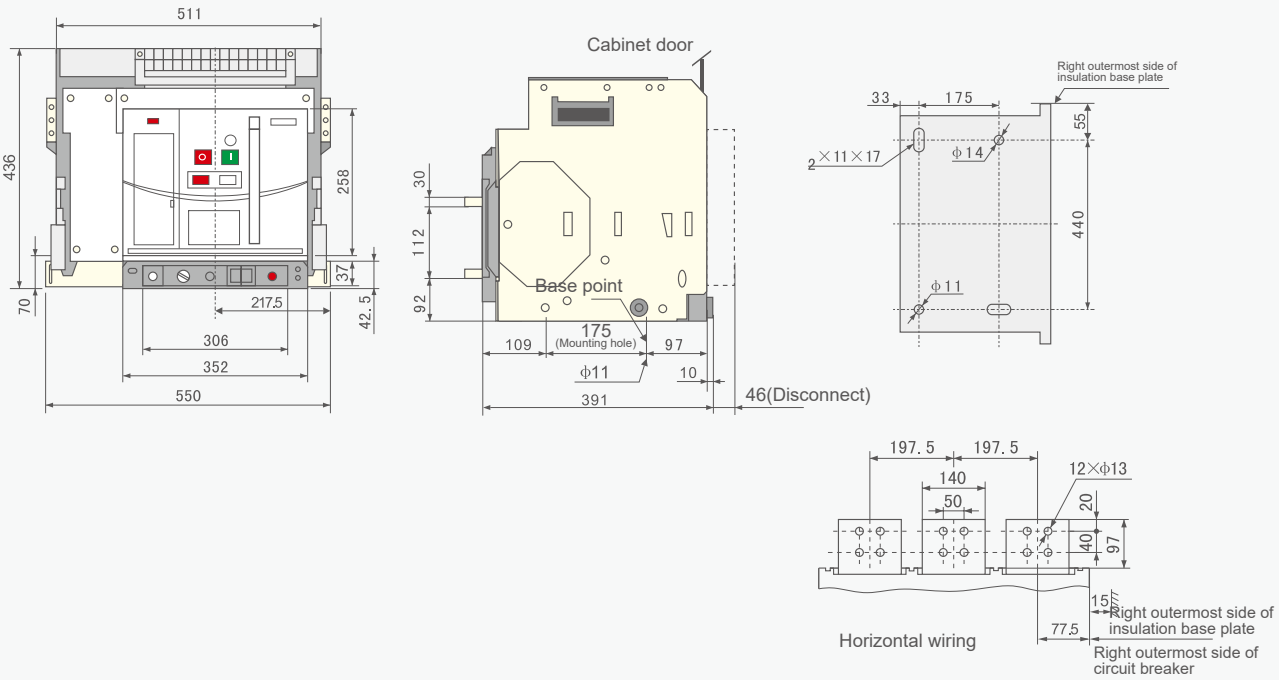

8.Installation and overall dimensions of draw-out circuit breakers (YCW1i-4000/4)

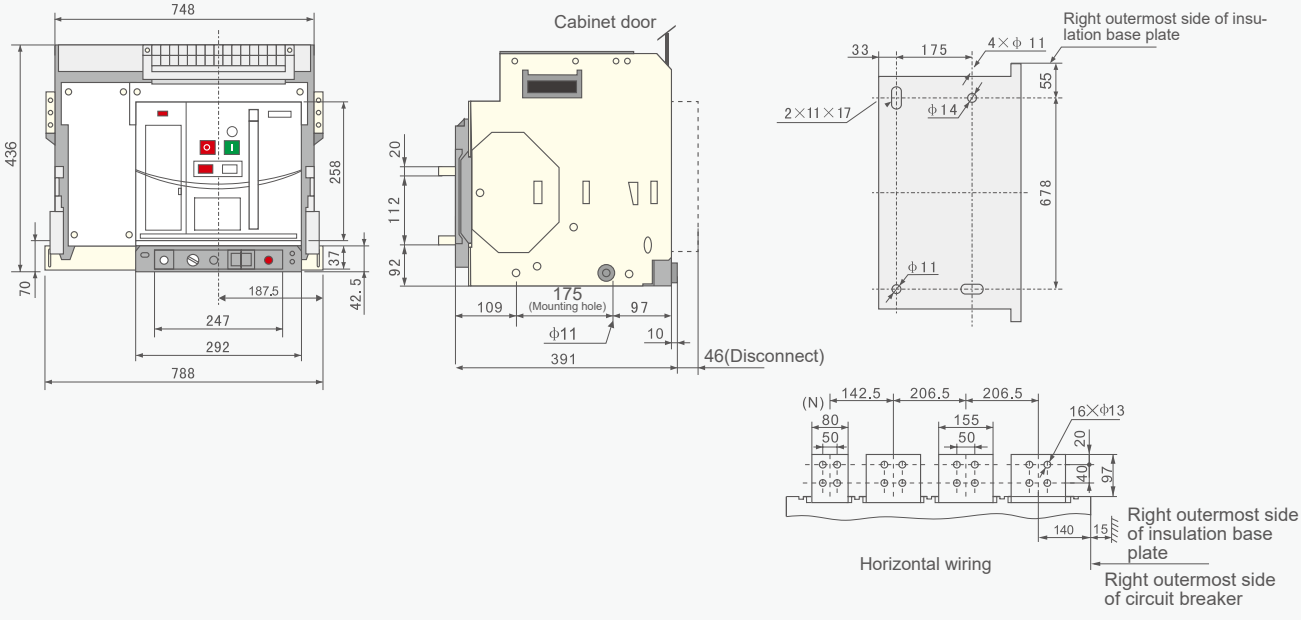

B

9. Installation and overall dimensions of draw-out circuit breakers(YCW1i-6300/3,6300/4 In:4000,5000)

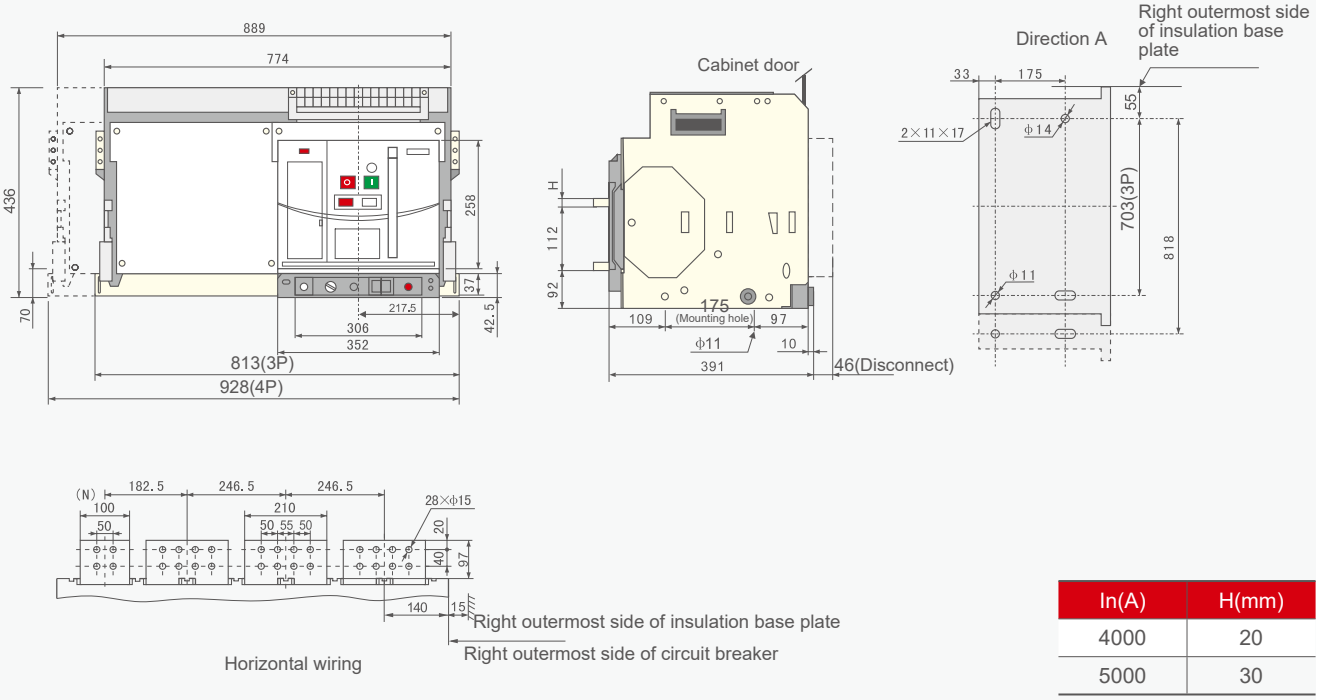

In(A)	H(mm)
4000	20
5000	30

10.Installation and overall dimensions of draw-out circuit breakers (YCW1i-6300/3 In: 6300A)

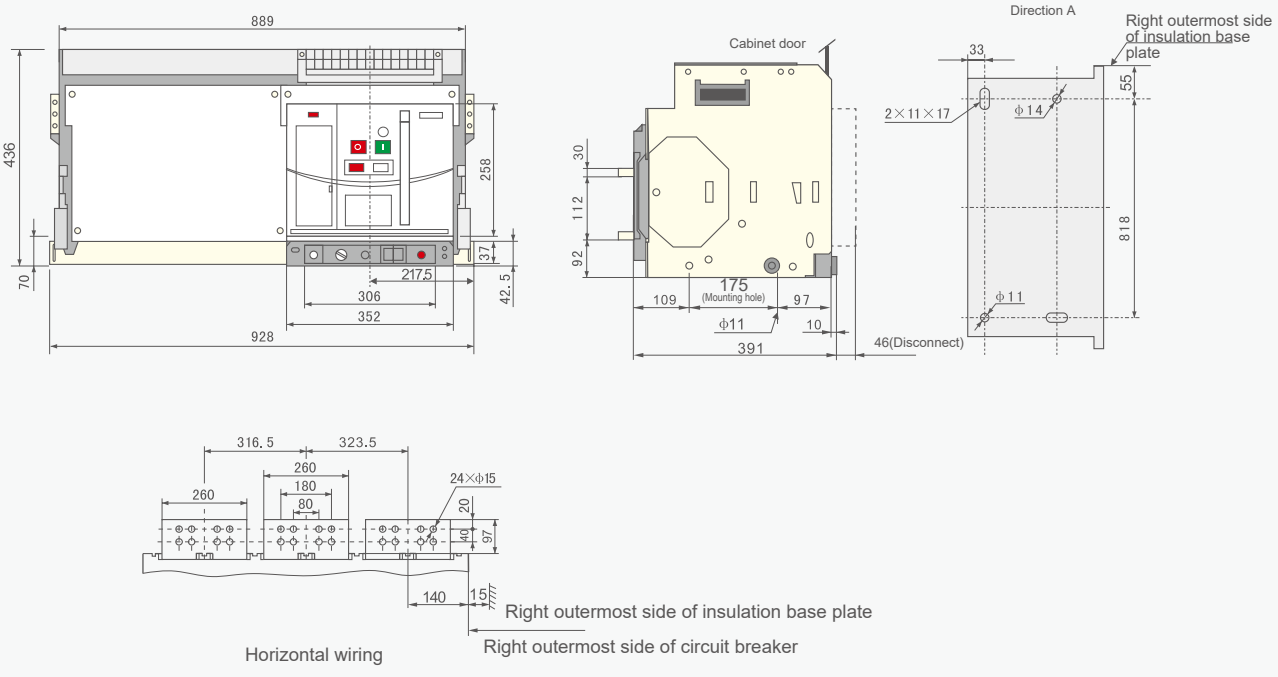

B

11. Installation and overall dimensions of fixed circuit breakers(YCW1i-6300/3,6300/4 In:4000, 5000)

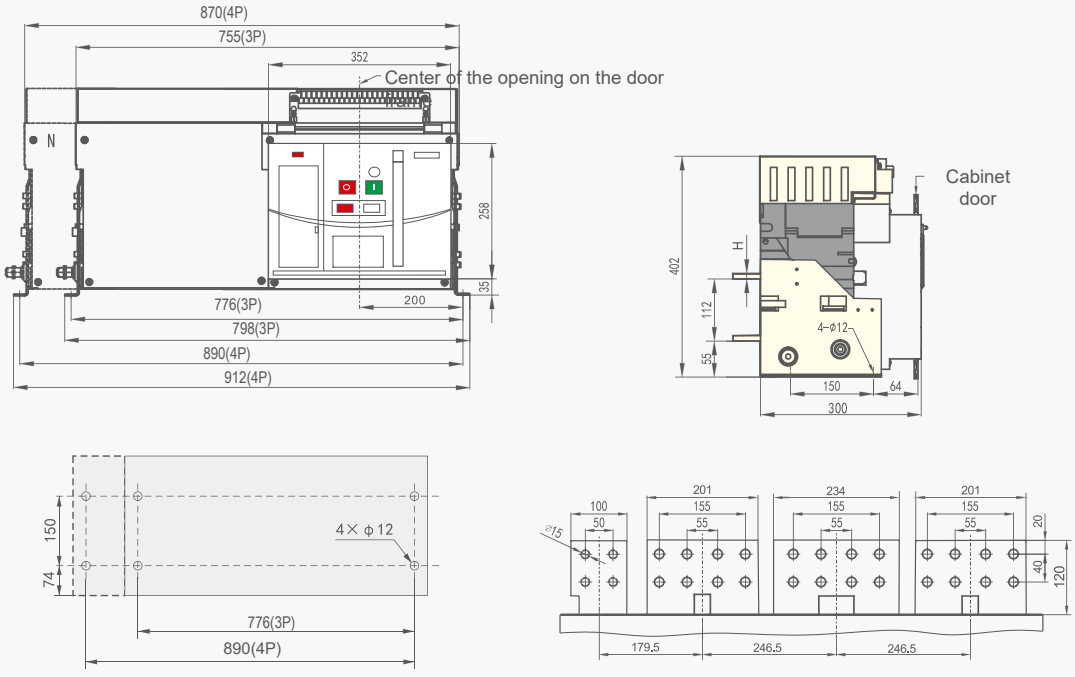

12.Installation and overall dimensions of fixed circuit breakers(YCW1i-6300/3 In: 6300A)

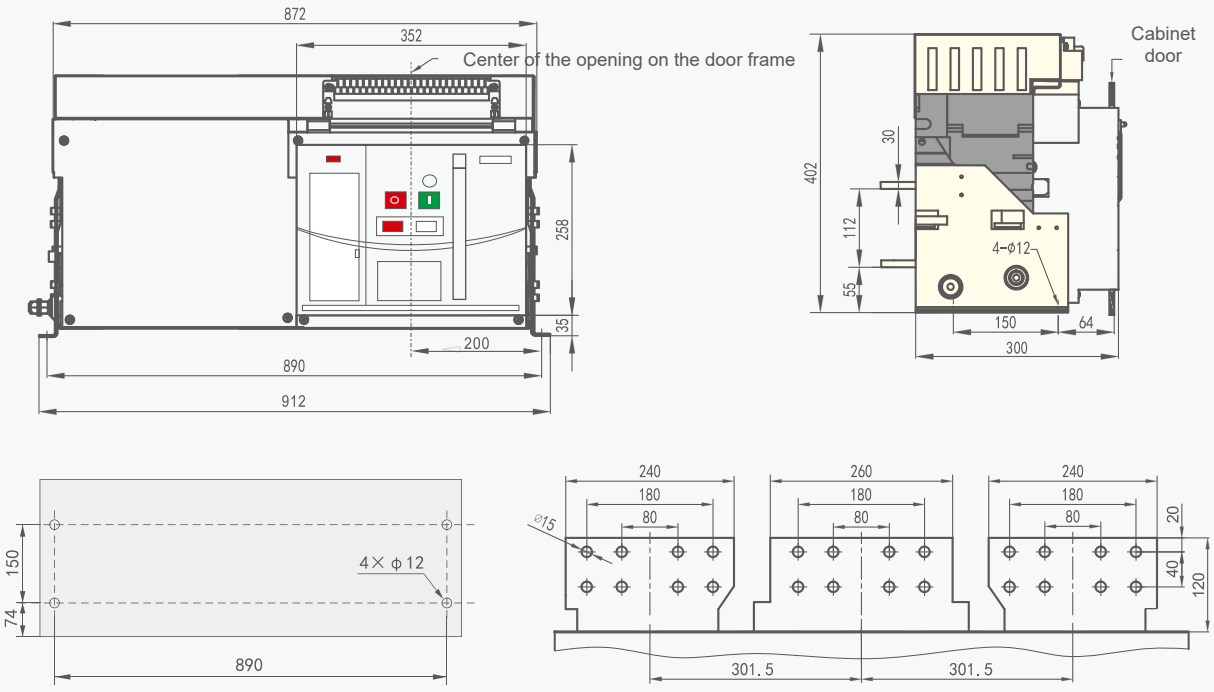

B

13.Panel cut-out and installation dimension diagram

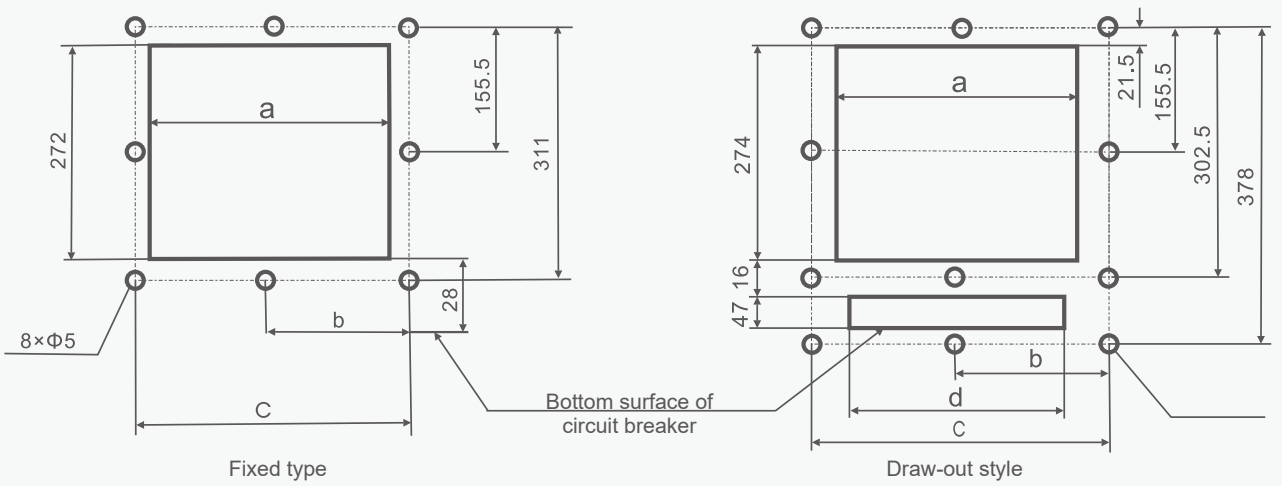

Table 14

Inm	a (mm)	b (mm)	c (mm)	d (mm)
2000 series, 4000 series 4P	302	172.5	345	262
3200 series, 4000 series 3P	362	202.5	405	322
63000 series				

Note: The 1600 frame series is shown in Figures 19 and 20

YCW1i Air Circuit Breaker

Order Form

The rated current of the circuit breaker is shown in the table below

<table>
<tr><th>User Unit</th><th colspan="2"></th><th>Order Quantity</th><th>Order Date</th></tr>
<tr><td>Model:</td><td colspan="2">□YCW1i - 1600
□YCW1i - 2000
□YCW1i - 3200
□YCW1i - 4000
□YCW1i - 6300</td><td colspan="2">Specification:
□Fixed Type □Drawer Type
□Three - pole □Four - pole
□Rated Voltage AC400V □Rated Voltage AC690V
□Rated Current In __A</td></tr>
<tr><td rowspan="7">Intelligent Controller</td><td rowspan="5">Basic Function Code</td><td colspan="3">Default Factory Settings: InstantaneousIr1=1In, TL=15s; Time - delayed Ir2=6In, TS=0.4s; Ir3=10In; Ir4 is OFF</td></tr>
<tr><td>Long - time Overload Protection Ir1</td><td colspan="2">Ir1 = __In (Selectable in 0.4 - 1.0, or set to OFF)
TL(1.5Ir1) = __s (Selectable in 15,30, 60 480)</td></tr>
<tr><td>Short - circuit Delay Protection Ir2</td><td colspan="2">Ir2 = __In (Selectable in 1.5 - 15, or set to OFF)
Time - delay ts = __s (Selectable in 0.1 - 0.4)</td></tr>
<tr><td>Short - circuit Instantaneous Protection Ir3</td><td colspan="2">Ir3 = __In (Selectable in 1.0 - 20, or set to OFF)</td></tr>
<tr><td>Earth Fault Protection Ir4</td><td colspan="2">Ir4 = __In (Selectable in 0.2 - 1.0, or set to OFF)</td></tr>
<tr><td rowspan="2">□M Type (Conventional Numeric Display)
□3M Type (LCD Display)</td><td>Basic Function</td><td>Optional Additional Functions</td></tr>
<tr><td>1. Various status indicators and digital display
2. Meter reading
3. Fault memory
4. Hot memory
5. Test
6. Earth fault protection (earth fault vector sum)</td><td>□Load Monitoring
□Meter Reading
□Voltmeter
□Ammeter
□MCR Fast Trip and Analog Trip
□Self- diagnosis</td></tr>
<tr><td>□H Type (Single - screen Numeric Display)
□2H Type (Dual - screen Numeric Display)
□3H Type (LCD Display with communication Function)</td><td>1. Load monitoring
2. Earth fault protection (earth fault vector sum)
3. Various status indicators and digital display
4. Ammeter
5. Voltmeter (2AV/3H three - phase voltmeter)
6. Fault memory
7. Hot memory
8. Test
9. RS485 communication interface
10. Alarm contact status</td><td>□Load Monitoring
□Meter Reading
□Voltmeter
□Ammeter
□MCR Fast Trip and Analog Trip
□Self - diagnosis</td></tr>
<tr><td>Control Power Supply</td><td colspan="2">□AC220V/230V □AC380V/400V □DC110V □DC220V □DC24V</td></tr>
</table>

YCW1i Air Circuit Breaker

User Unit		Order Quantity	Order Date
Standard Accessories	□Undervoltage Release	□AC220V/230V □AC380V/400V	
		□Undervoltage Instantaneous Release (Conventional) □Undervoltage Delay Release □0.5s □1s □3s □5s	
	□Shunt Trip	□AC220V/230V □AC380V/400V □DC220V □DC110V	
	□Closing Electromagnet	□AC220V/230V □AC380V/400V □DC220V □DC110V	
	□Motor Operating Mechanism	□AC220V/230V □AC380V/400V □DC220V □DC110V	
	□Auxiliary Contact	□Four - way Transfer Contact (Conventional) □Five - way Transfer Connector (Conventional) □Six - way Transfer Connector (Conventional) □Five - way Transfer Connector □Independent Three Normally Open and Three Normally Closed □Independent Four Normally Open and Four Normally Closed Note: The 1600 type only has four - way (conventional) and five - way transfer connectors	
	Others	☑Door Frame and Its Installation Screws □Phase - to - phase Partition. □Terminal Bolt	
Optional Accessories	□Mechanical Interlock	□Cable Interlock □Hard Rod Interlock	
		□Three Locks with Two Keys □Two Locks with One Key □One Lock with One Key Note: The 1600 frame size is only equipped with four-way (conventional) and five-way transfer contacts.	
Connection	Connection Method	□Horizontal Connection (Conventional) □Vertical Connection (Drawings provided by the user)	
Remarks	If there are other special requirements, please negotiate with our company and note them in the order.		

YCW3 Air Circuit Breaker



General

YCW3 series air circuit breaker(hereinafter called ACB) is suitable for the circuit of AC 50Hz/60Hz with rated service voltage 400V, 690V and rated service current between 200A and 6300A. It is mainly used to distribute electric energy and protect circuits and electric equipment against over-load, under-voltage, short-circuit and single-phase earthing fault.

With intelligent and selective protection functions, the breaker can improve the reliability of power supply, and avoid unnecessary power failure. The breaker is applicable for power stations, factories, mines(for 690V) and modern high-buildings, especially for the distribution system of intelligentized building.

Standard: IEC/EN 60947-2.

Type designation

YCW3 - □ / □ + Installation + Control unit + Common use accessory + Optional accessory

Type	Rated current in scope of frame size	Number of poles	Installation
YC 3 -	□	/ □	Installation
MCCB	1600 Type In: 200A,400A,630A,800A,1000A,1250A,1600A 2000 Type In: 630A,800A,1000A,1250A,1600A,2000A 2500 type In:630A,800A,1000A,1250A,1600A,2000A,2500A 3200 Type In: 2000A,2500A,3200A 4000 Type In: 2500A,3200A,4000A 6300 Type In: 4000A,5000A,6300A	3-3 pole(default) 4-4 pole	Fixed type-horizontal Drawout type-horizontal, vertical (Default horizontal wiring)

Control unit	Common use accessory	Optional accessory
Intelligent controller	Common use accessory	Optional accessory
M type 2M type: digital display, over-current protection (overload, short delay, instantaneous), 4P or 3P+N have earthing protection. 3M type: LCD display, over-current protection(overload, short delay, instantaneous), 4P or 3P+N have earthing protection. H type 2H type: communication function, digital display, over-current protection (overload, short delay, instantaneous), 4P or 3P+N have earthing protection. 3H type: communication function, LCD display, over-current protection (overload, short delay, instantaneous), 4P or 3P+N have earthing protection.	Shunt release-AC220V/230V,AC380V/400V, DC220V, DC110V Undervoltage release-AC220V/230V, AC380V/400V, it is classified to instantaneous type and time-delay type. Closing electromagnet-AC220V/230V, AC380V/400V, DC220V,DC110V Motor-driven energy-storage mechanism-AC220V/230V, AC380V/400V, DC220V,DC110V Auxiliary contact-4a4b,2a6b,3a3b Note: a-normal open, b-normal close	Mechanical interlock; One circuit breaker (1lock+1key) Two circuit breakers(steel cable interlock, connecting rod interlock,2lock+1key) Three circuit breakers (3lock+2keys, connecting rod interlock) Automatic power transfer system Current transformer connected with neutral load

YCW3 Air Circuit Breaker

Operating conditions

Item	Description
Ambient temperature	-5°C~+40°C;the average value within 24h shall not exceed +35°C; L type and M type controller can be used under -40°C~+70°C
Altitude	≤2000m
Pollution grade	3
Safety category	Main circuit and undervoltage tripping coil is IV,other auxiliary and control circuit is III
Installation position	Vertically installed, inclination between the mounting plane and the vertical plane should not exceed ±5°

Technical data

Item	Description
Number of Poles	3,4
Rated voltage Ue(V)	400/415, 660/690
Rated insulation voltage Ui(V)	1000
Rated impulse withstand voltage Uimp(kV)	12
Rated frequency(Hz)	50/60
Have function of switch disconnector	

YCW3 Air Circuit Breaker

Frame size rated current

Rated current In(A)	1600	2000	2500	3200	4000	6300
200	●					
400	●					
630	●	●	●			
800	●	●	●			
1000	●	●	●			
1250	●	●	●			
1600	●	●	●			
2000		●	●	●		
2500			●	●	●	
3200				●	●	
4000					●	●
5000						●
6300						●

Breaking capacity

Rated current In(A)		1600	2000	2500	3200	4000	6300
Rated ultimate short circuit breaking capacity Icu(kA)	400/415V	65	80	100	100	120	135
	660/690V	50	65	70	85	85	100
Rated service short circuit breaking capacity Ics(kA)	400/415V	55	65	80	80	100	135
	660/690V	42	65	70	70	85	100
Rated short time withstand current Icw.1s(kA)	400/415V	50	65	80	80	100	135
	660/690V	42	65	70	70	85	100
Rated short circuit making and breaking capacity Icm(kA)	400/415V	110	176	220	220	264	297
	660/690V	77	143	154	154	187	220
Electric life		8000	8000	8000	8000	600	1500
Mechanical life (Maintenance)		30000	30000	30000	20000	20000	5000
Mechanical life (Non-maintenance)		20000	15000	15000	12500	10000	2500
Dimension(mm) W×H×L							
Drawout type	3P	254×297×354	375×389×432	375×389×432	435×389×432	435×389×432	813×389×432
	4P	324×297×354	470×389×432	470×389×432	550×389×432	550×389×432	928×389×432
Fixed type	3P	269×195×324	362×293×401	362×293×401	426×293×401	426×293×401	807×293×401
	4P	339×195×324	457×293×401	457×293×401	537×293×401	537×293×401	922×293×401

Note: 6300A only has 3P drawout type.

YCW3 Air Circuit Breaker

B

Protection features of intelligent controller

Digital display intelligent controller

M type: digital display without communication
H type: digital display with communication

01 bottom fixing position
02 rated current
03 digital display window
04 "set" switch to setting menu
05 base plate
06 indicator



LCD display intelligent controller

3M type: LCD display without communication
3H type: LCD display with communication

01 bottom fixing position
02 rated current
03 LCD display window
04 "set" switch to setting menu
05 base plate
06 indicator



YCW3 Air Circuit Breaker

M/H (standard type) intelligent controller

Indicator Instruction

01 Current of phase A
02 Current of phase B
03 Current of phase C
04 Current of phase N
05 Load monitoring 2
06 Load monitoring 1
07 Unbalanced current protection
08 Earth fault protection
09 Self-diagnosis by the intelligent controller
10 Short circuit instantaneous protection
11 Short circuit short-time delay protection
12 Overload long-time delay protection
18 Set indicator
19 Check indicator
20 Save indicator
21 Test indicator
22 Alarm indicator
23 Fault indicator

Button Instruction

13 +/up
14 Enter
15 -/down
16 Function keys
17 Return

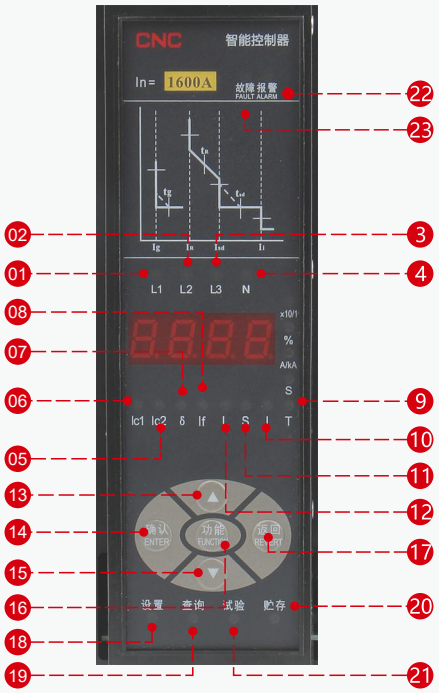

3M/3H(LCD) intelligent controller

Button Instruction

01 -/down
02 +/up
03 Set
04 Check
05 Return
06 Enter
07 Test
08 Reset

Indicator Instruction

09 Overload long-time delay protection
10 Run indicator
11 Communication indicator
12 Short circuit short-time delay protection
13 Earth fault protection
14 Alarm indicator
15 Over-voltage protection
16 Short circuit instantaneous protection



YCW3 Air Circuit Breaker

B

Accessories

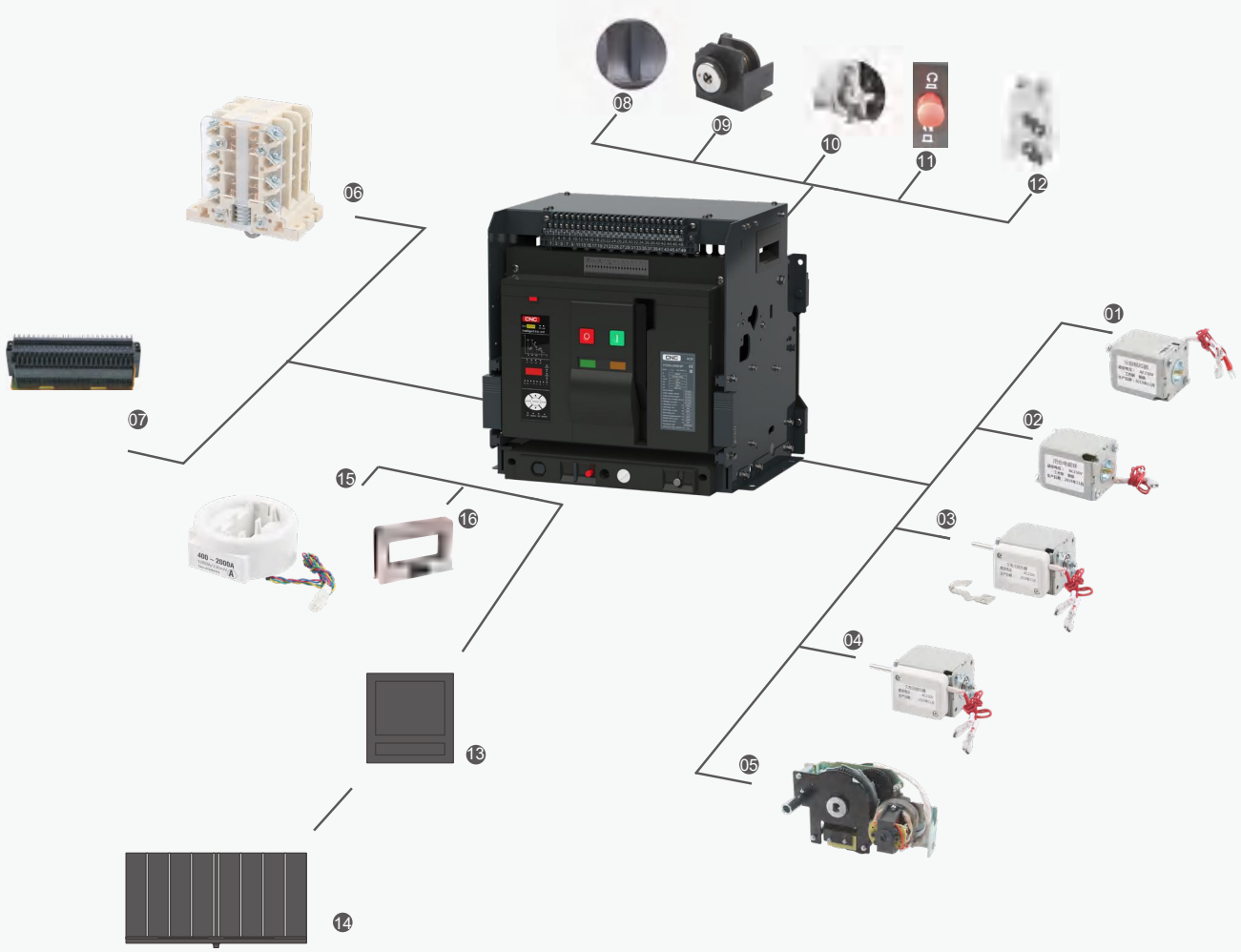

Remote operation

- 01 shunt release
- 02 closing electromagnet
- 03 under-voltage release instantaneous type
- 04 under-voltage release time-delay type
- 05 motor-driven energy-storage mechanism

Indication contact

- 06 auxiliary contact
- 07 secondary wiring terminal

Lock and connection

- 08 padlock
- 09 key lock
- 10 door interlock
- 11 connected, disconnected, test position locking mechanism
- 12 mechanical interlock

Operation and protection

- 12 doorcase
- 13 phases barrier

Current transformer

- 14 external N-pole transformer
- 15 leakage current transformer
- 16 earthing current transformer

B

Accessories of YCW3



Shunt release

Shunt release can realize the remote control to break the circuit breaker.

- rated control power voltage Us(V) AC220V/230V, AC380V/400V, DC220V, DC110V
- work voltage (0.7~1.1)Us
- breaking time (50±10)ms

Forbid making the power for long time to avoid the shunt release being damaged.



Closing electromagnet

After the motor finishes the energy storage, closing release can instantly close the circuit breaker.

- rated control power voltage Us(V) AC220V/230V, AC380V/400V, DC220V, DC110V
- work voltage (0.85~1.1)Us
- closing time (55±10)ms

Forbid making the power for long time to avoid the closing release being damaged.



Under-voltage release

Without power supply, under-voltage release can't close.
It is classified into instantaneous and time-delay type.
After closing the circuit breaker, under-voltage release can break the circuit breaker when the voltage drops to (70%~35%) Us. The circuit breaker can be closed again when power voltage recovers and exceeds 85%Us.

- rated control power voltage Us(V) AC220V/230V,AC380V/400V
- action voltage (0.35~0.7)Us
- reliable making voltage (0.85~1.1)Us
- reliable non-making voltage ≤0.35Us
- delay time: 0.5s,1s,1.5s,3s (YCW3-1600 , non-adjustable);
  0.5s, 1s, 3s, 5s(YCW3-2000A, 3200A, 4000A, 6300A, adjustable).

Make sure there is power supply on the under-voltage release before making the circuit breaker.

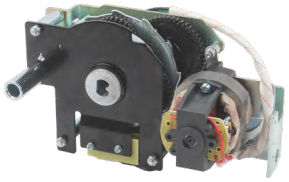

Motor-driven energy-storage mechanism

With the function of motor-driven storing and auto restoring energy after closing the circuit breaker, the mechanism can ensure to close the circuit breaker instantly after breaking the circuit breaker.

- rated control power voltage Us(V) AC220V/230V,AC380V/400V,DC220V,DC110V
- work voltage (0.85~1.1)Us
- power loss 75W(1600A), 85W(2000A),110W(3200A,4000A),150W(6300A)
- energy-storage time <5s

YCW3 Air Circuit Breaker

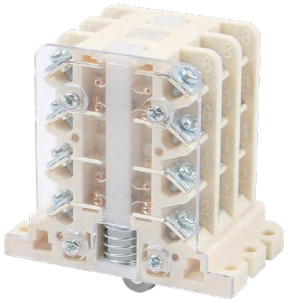

Auxiliary contact

Standard model: 4NO/4NC

For YCW3-1600: only have 4NO/4NC;

For YCW3-2000, 3200, 4000, 6300: 4NO/4NC, 4NO+4NC, 2NO+6NC, 3NO+3NC.

Ith: AC380V/AC400V 0.75A, DC220V 0.15A, AC220V/AC230V 1.3A.



Lock

Key lock

The OFF button of the circuit breaker can be locked in the depressed position and the circuit breaker cannot be closed in that case; when the user selects the option, the factory provides locks and keys; One breaker is provided with one lock and one key for the lock; two breakers are provided with two locks and one key for the locks; three breakers are provided with three same locks and two same keys for the locks.

Note: It is necessary to firstly press the OFF key and turn it anticlockwise before pulling out the key for the air circuit breaker with key lock equipped.

"Disconnected" position locking device for the draw-out type

For the “disconnected” position of the draw-out circuit breaker, a lock rod can be pulled out to lock the matter, and the breaker locked will be unable to be turned towards the TEST or CONNECTION position. Padlocks have to be provided by users themselves.

Three position locking device for the draw-out

It is the locking device for three positions(disconnected, test, connection) of drawout type. Three positions of circuit breaker is indicated by the indicator, the driving and the reversing handle which is locked in the exact position, and the lock can be released by the reset button.



Door-case

Installed on the door of the distribution cubicle, for sealing the distribution cubicle and making the protection class to IP40(fixed type and draw-out type).

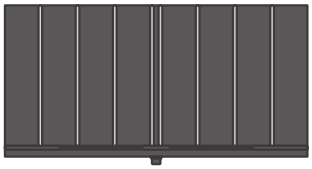

Phases barrier (optional)

Installed between the bus-bars to increase the creepage distance.



Controller accessories

Leakage current transformer

1. If the grounding protection is the leakage type, then a rectangular transformer will be needed.

YCW3 Air Circuit Breaker

B

Overall and mounting dimensions(mm)

YCW3-1600A Fixed circuit-breaker

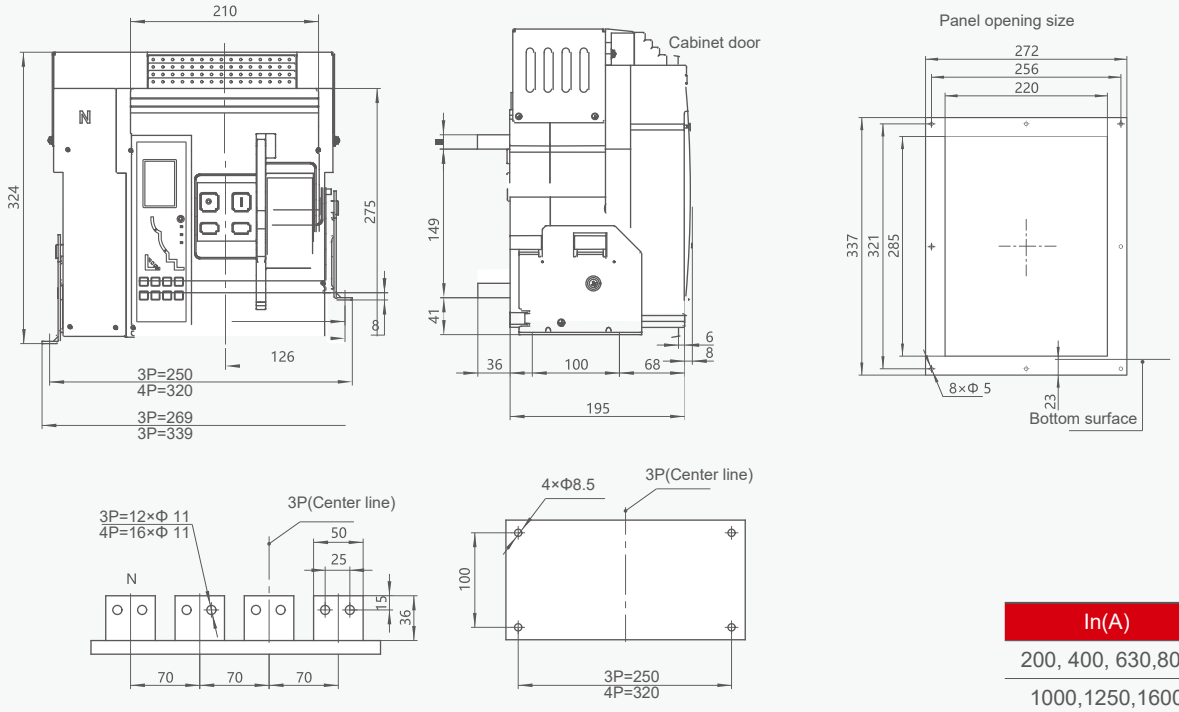

In(A)	a(mm)
200, 400, 630,800	5
1000,1250,1600	10
1600	16

YCW3-2000A Fixed circuit-breaker

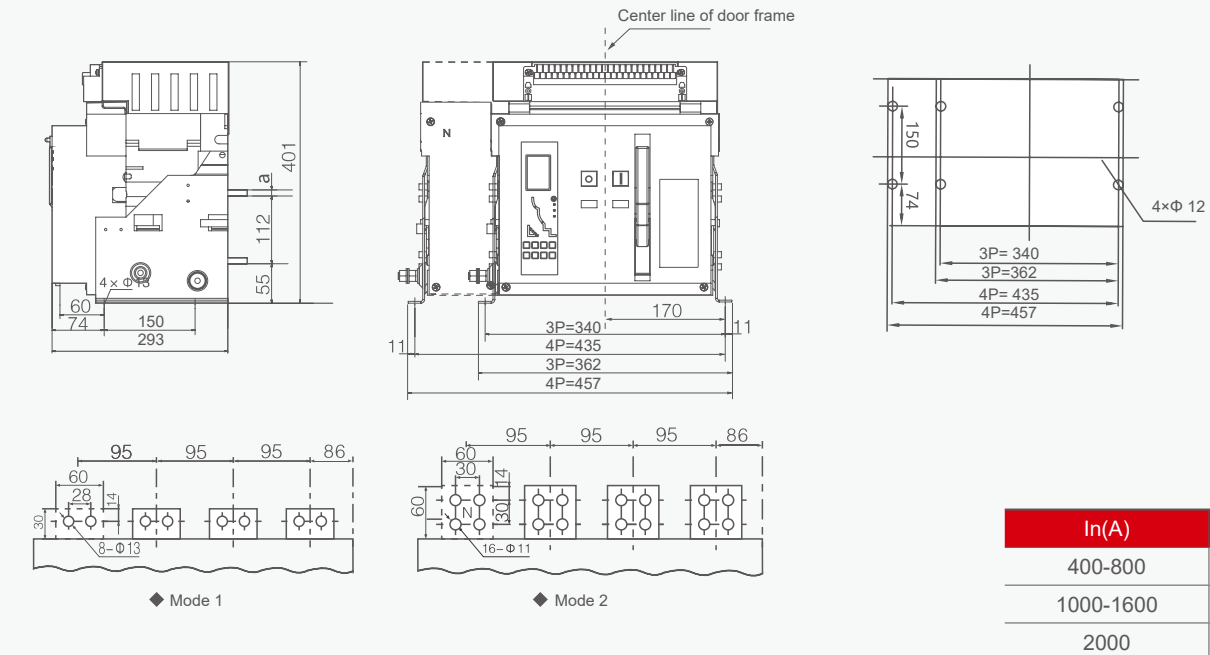

In(A)	a(mm)
400-800	10
1000-1600	15
2000	20

Note: Regular default Mode 1;When using Mode 2, please remark the extended busbar after the model to place an order

YCW3 Air Circuit Breaker

Overall and mounting dimensions(mm)

YCW3-2500A Fixed circuit-breaker

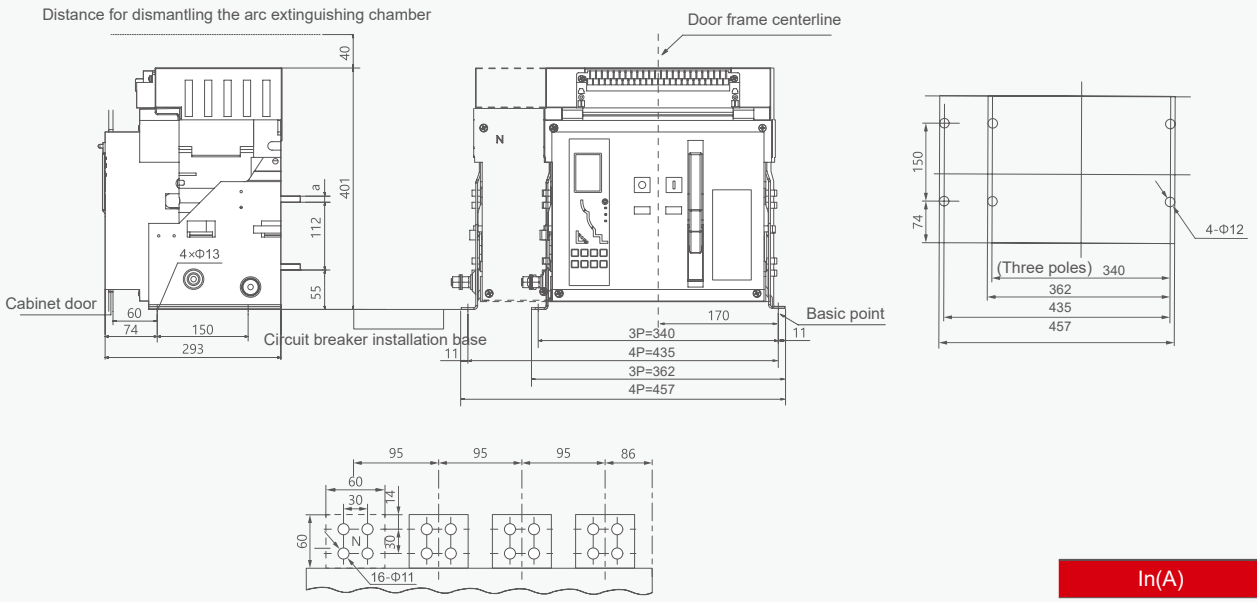

In(A)	a(mm)
630-800	10
1000-1600	15
2000-2500	20

YCW3-3200A Fixed circuit-breaker

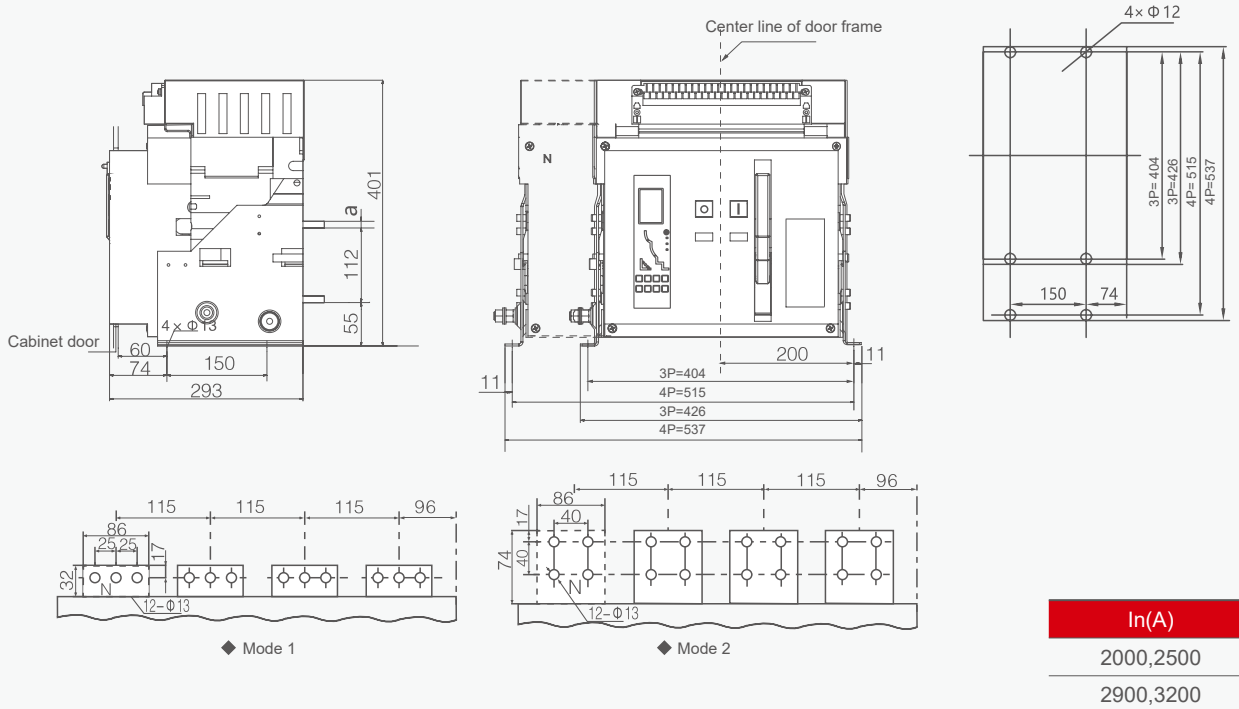

In(A)	a(mm)
2000,2500	20
2900,3200	30

Note: Regular default Mode 1;When using Mode 2, please remark the extended busbar after the model to place an order

YCW3 Air Circuit Breaker

YCW3-4000A Fixed circuit-breaker

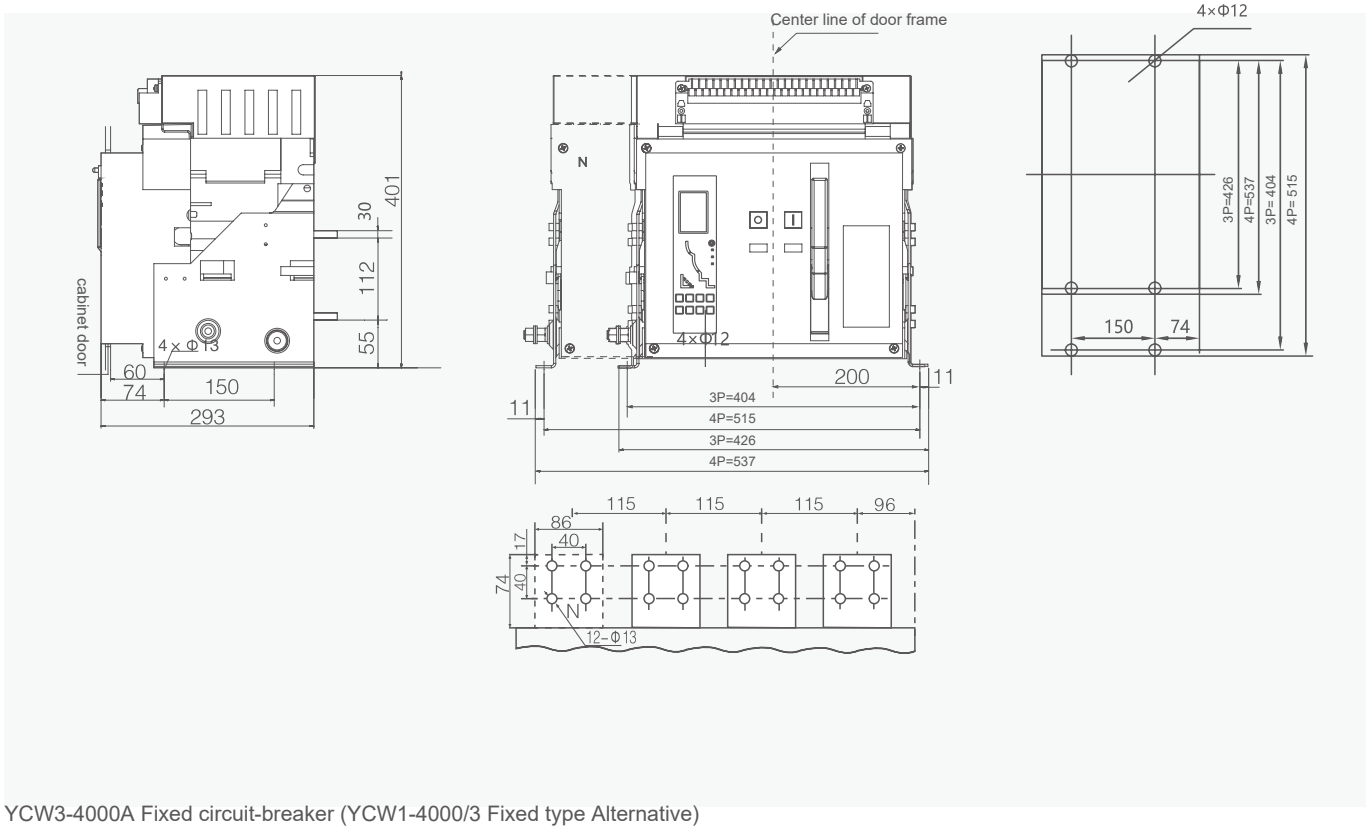

YCW3-4000A Fixed circuit-breaker (YCW1-4000/3 Fixed type Alternative)

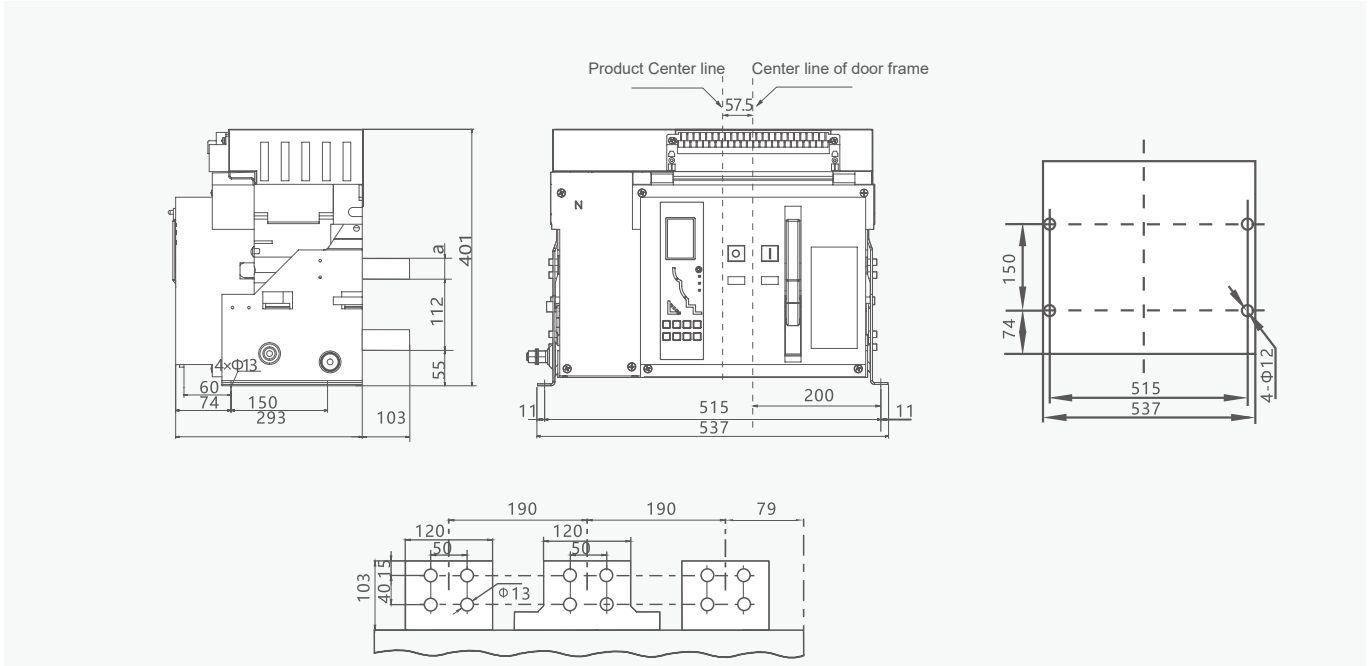

In(A)	a(mm)
2500-4000	30

YCW3 Air Circuit Breaker

Overall and mounting dimensions(mm)

YCW3-6300/3P Fixed circuit-breaker

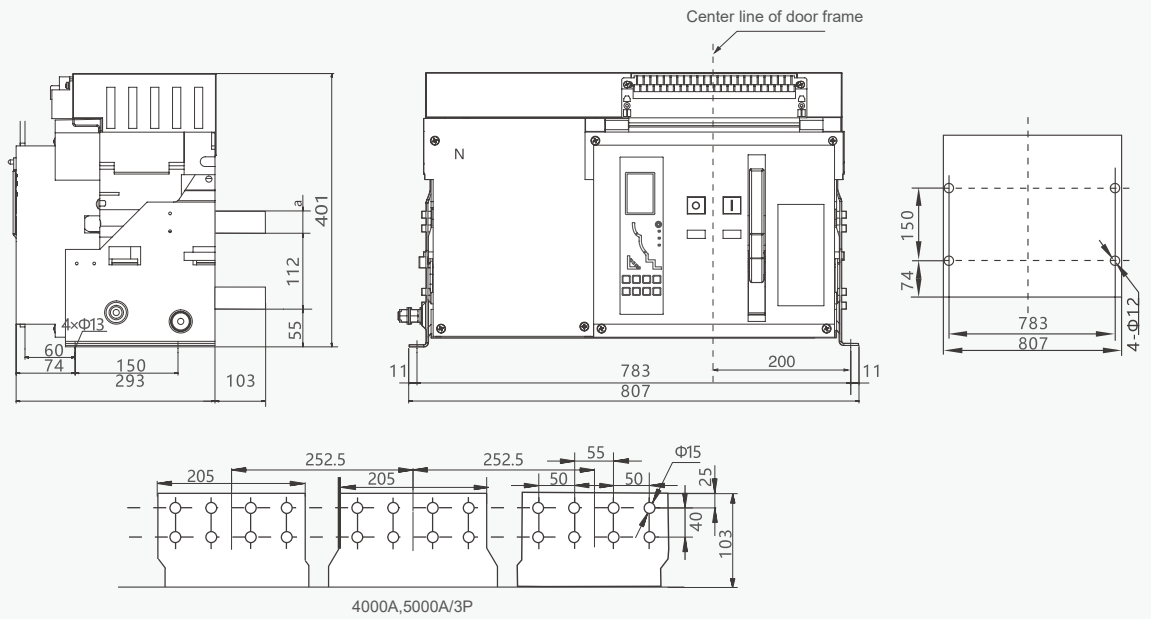

In(A)	a(mm)
4000	20
5000	30

YCW3-6300A Fixed circuit breaker

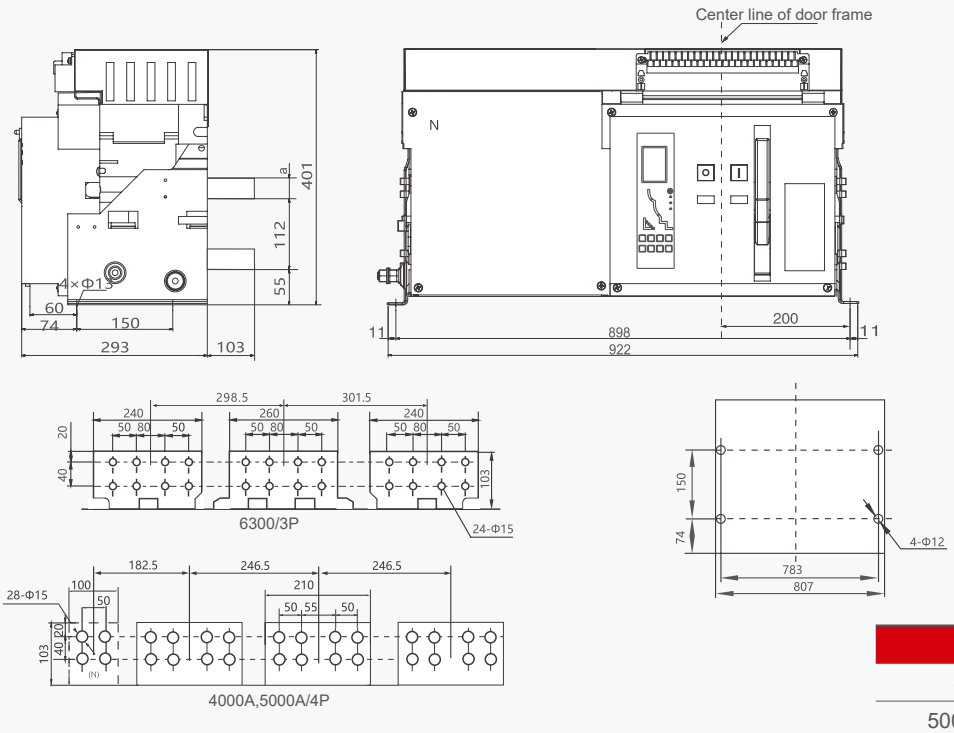

In(A)	a(mm)
4000	20
5000,6300	30

YCW3 Air Circuit Breaker

YCW3-1600A Drawer circuit breaker

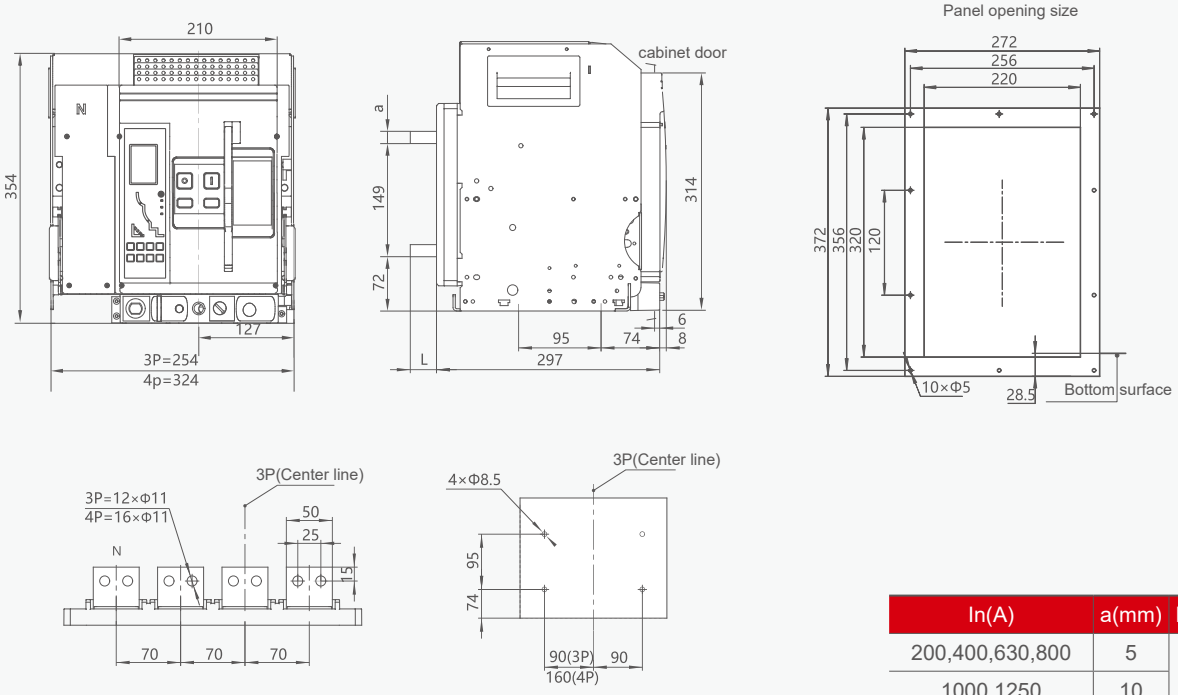

In(A)	a(mm)	L(mm)
200,400,630,800	5	35
1000,1250	10	
1600	18	

YCW3-2000A Drawer circuit breaker

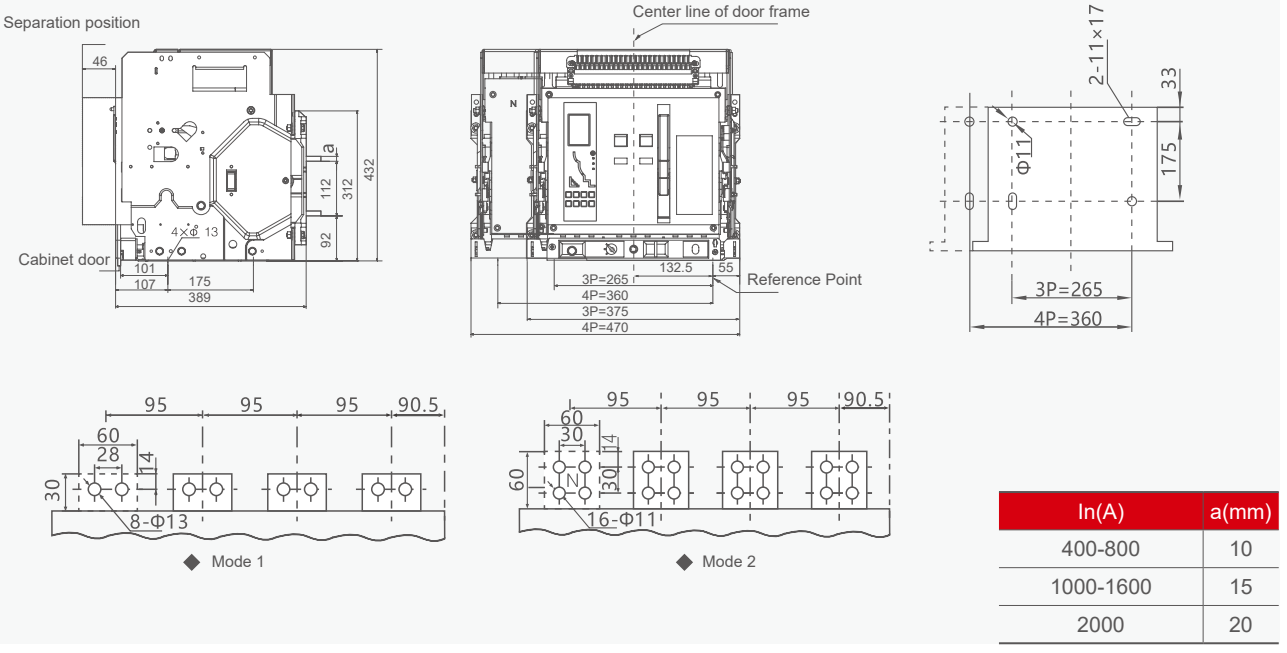

In(A)	a(mm)
400-800	10
1000-1600	15
2000	20

Note: Regular default Mode 1;When using Mode 2, please remark the extended busbar after the model to place an order

YCW3 Air Circuit Breaker

Overall and mounting dimensions(mm)

YCW3-2500A Drawer circuit breaker

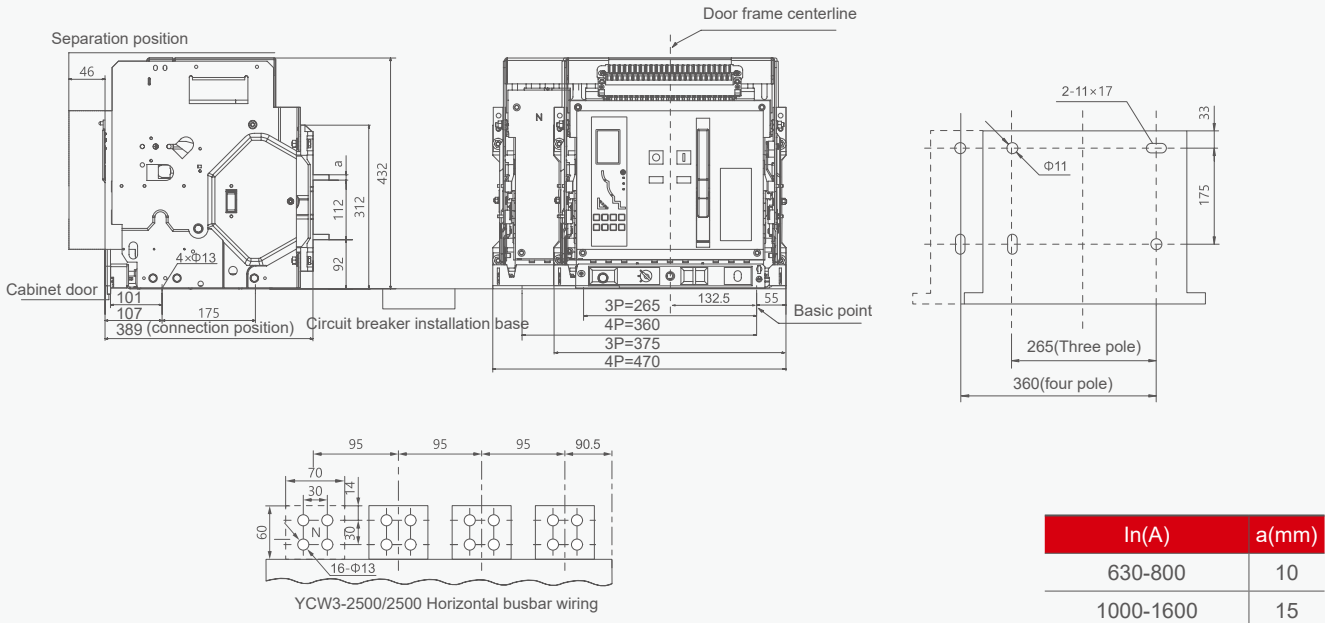

In(A)	a(mm)
630-800	10
1000-1600	15
2000-2500	20

YCW3-3200A Drawer circuit breaker

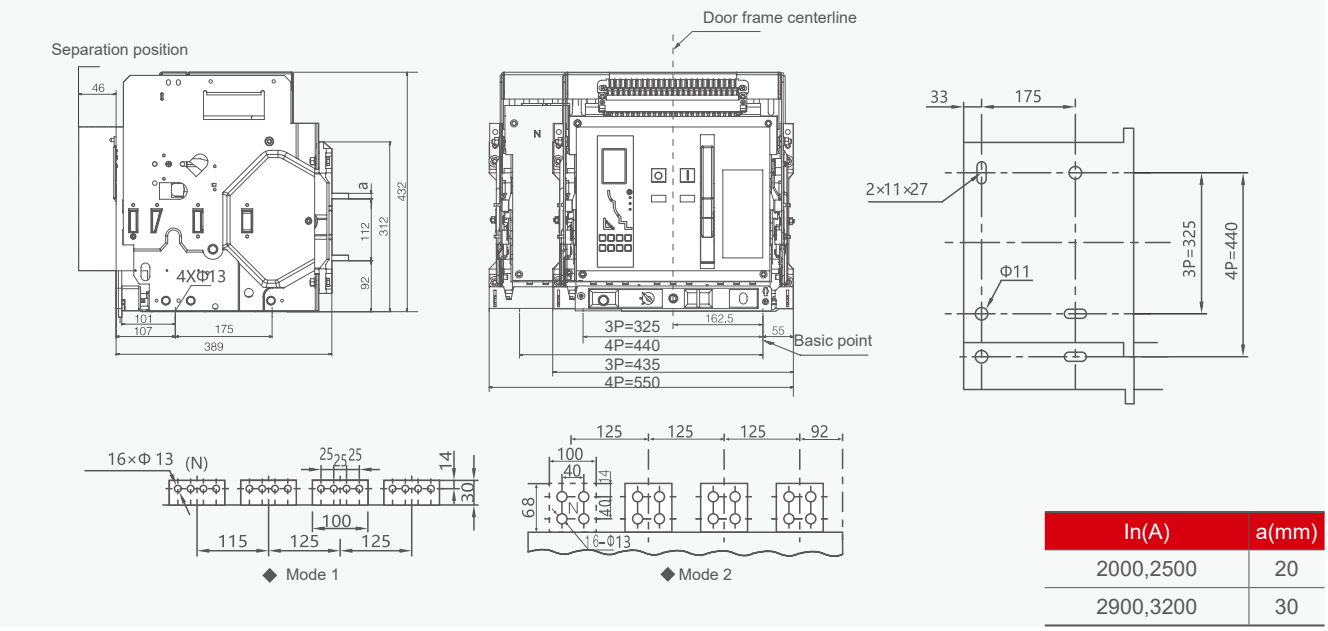

In(A)	a(mm)
2000,2500	20
2900,3200	30

Note: Regular default Mode 1;When using Mode 2, please remark the extended busbar after the model to place an order

YCW3 Air Circuit Breaker

YCW3-4000A Drawer circuit breaker

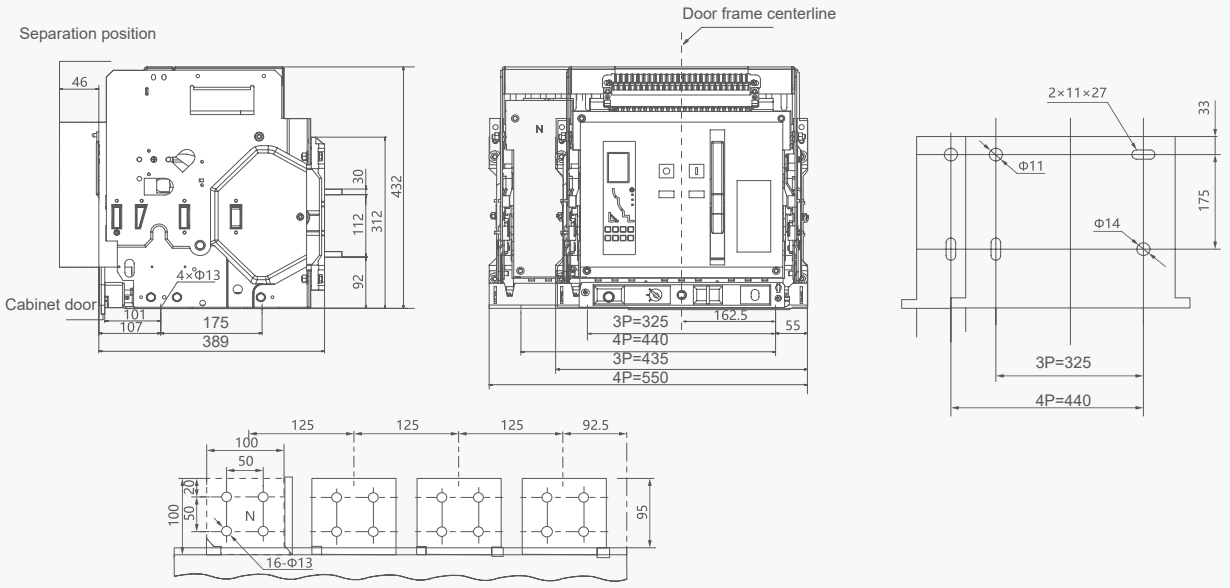

YCW3-4000A Drawer circuit breaker (YCW1-4000 Drawer Alternative)

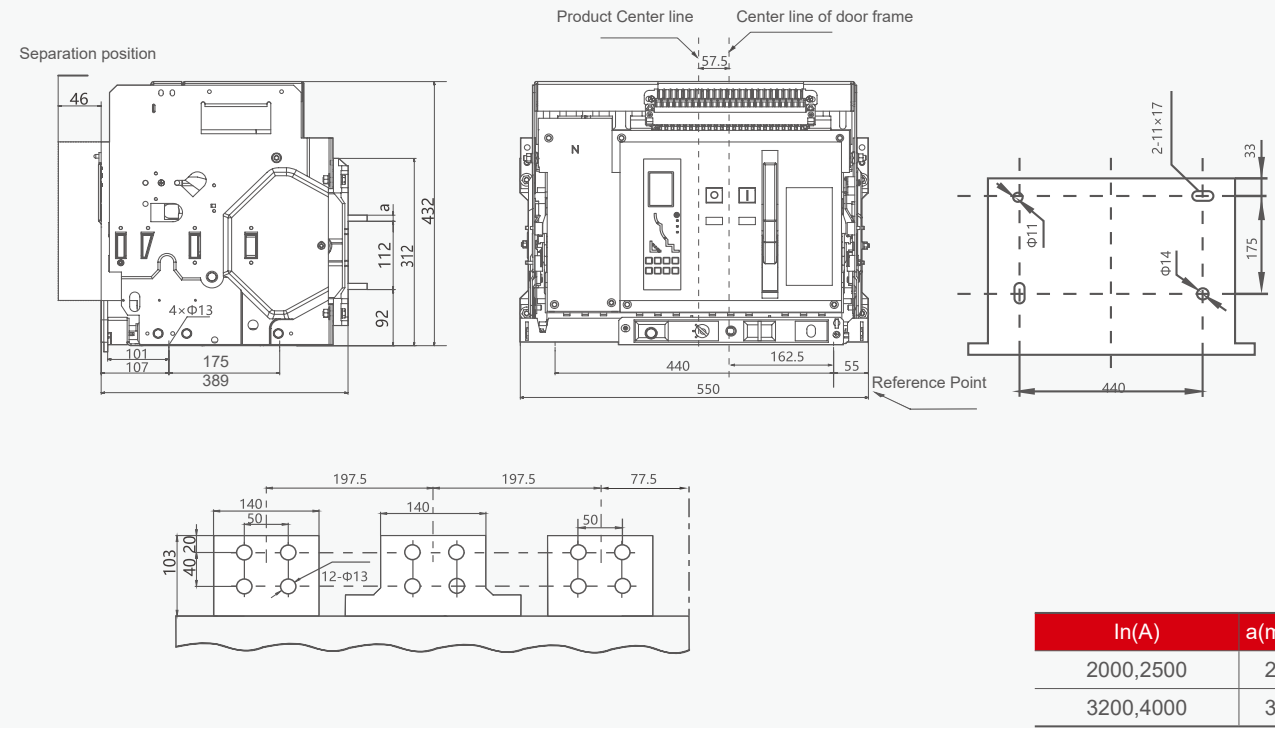

In(A)	a(mm)
2000,2500	20
3200,4000	30

YCW3 Air Circuit Breaker

Overall and mounting dimensions(mm)

YCW3-6300 /3P Drawer circuit breaker

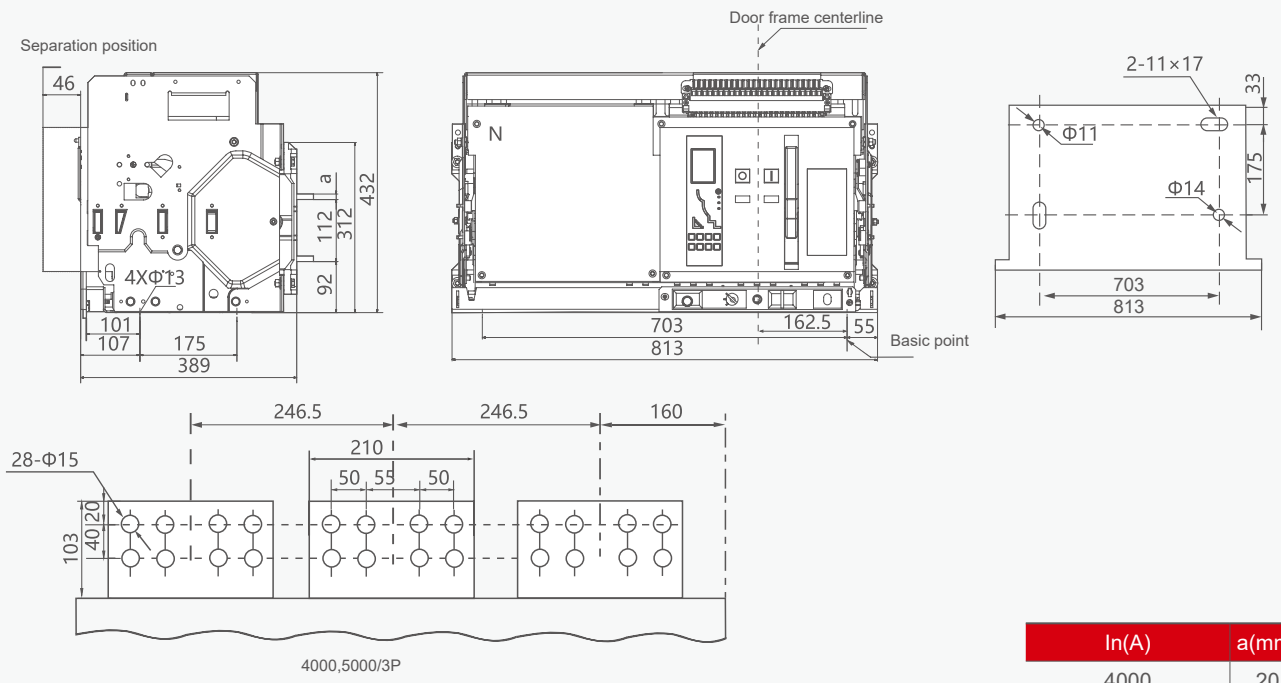

In(A)	a(mm)
4000	20
5000	30

YCW3-6300A Drawer circuit breaker

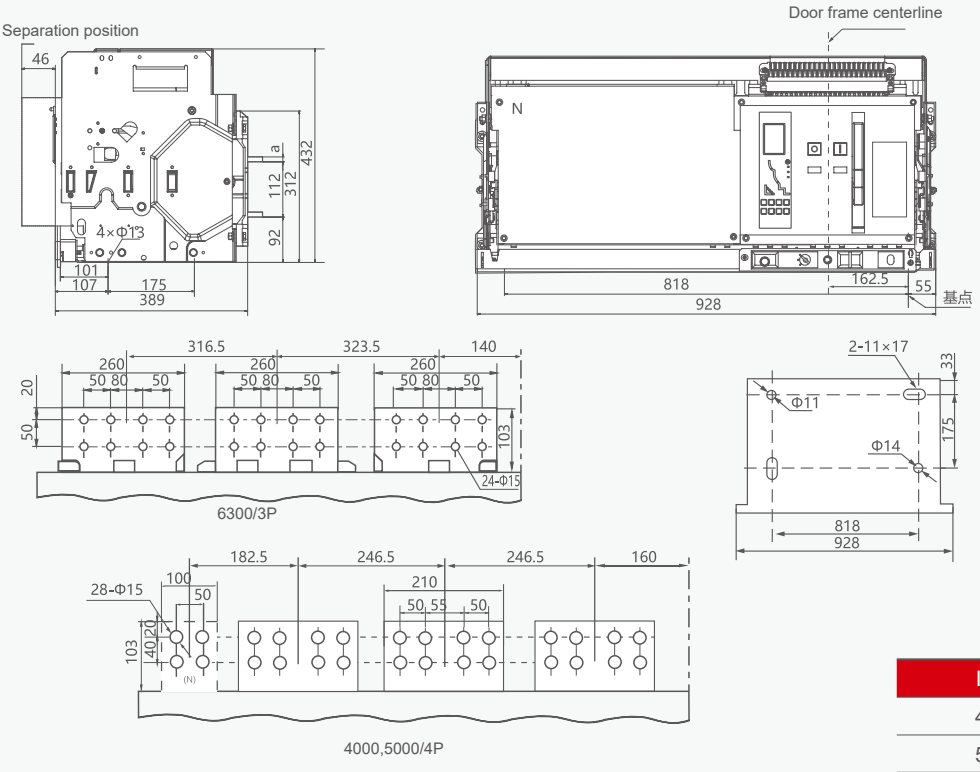

In(A)	a(mm)
4000	20
5000	30

YCW3 Air Circuit Breaker

Boring dimension of doorcase

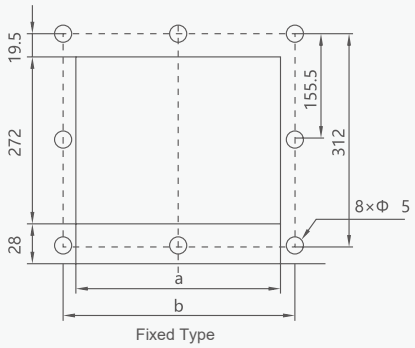

Fixed Type

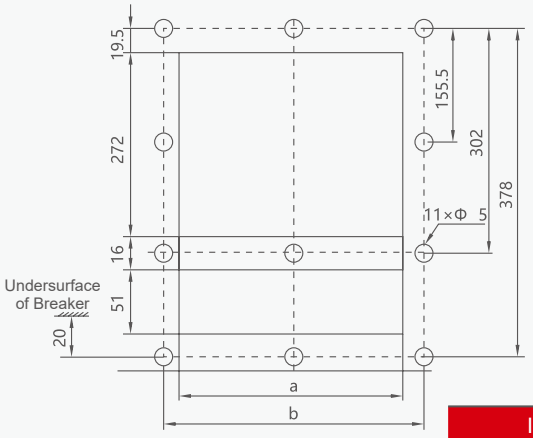

Drawer Type
Installation size for panel drilling

In(A)	a	b
YCW3-2000	306	346
YCW3-3200~6300	366	406

Mechanical interlock

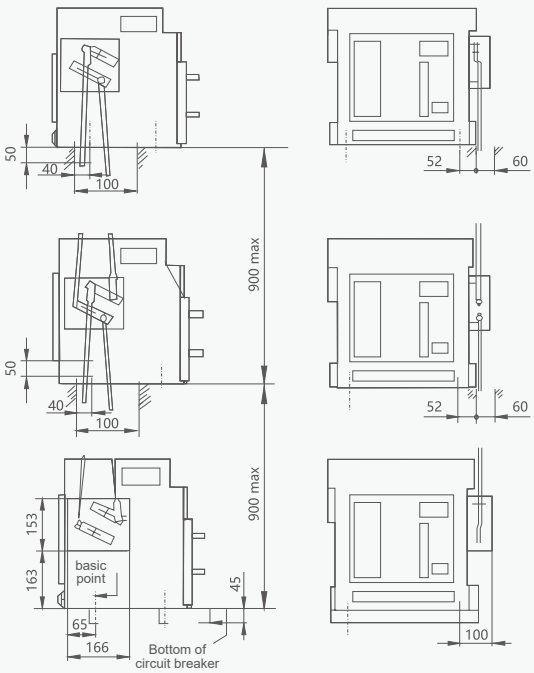

Vertically-installed mechanical interlock

Note: 3 circuit breakers are vertically installed with the connecting-rod type mechanical interlock. And if only 2 circuit breakers are needed, then remove the top one.

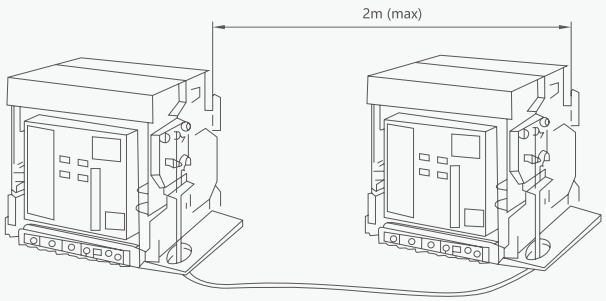

Horizontally-installed mechanical interlock

Note: 2 circuit breakers are horizontally installed with the steel cable mechanical interlock(fixed type or drawout type circuit breaker).

YCW3 Air Circuit Breaker

Ordering information

Quantity Set							
Model			Available type and rated current		Rated voltage	□ AC400V	□ AC690V
YCW3-1600			□ 200 □ 400 □ 600 □ 800 □ 1000 □ 1250 □ 1600		Quantity Set	□ Fixed □ Draw-out □ Three poles □ Four poles	
YCW3-2000			□ 630 □ 800 □ 1000 □ 1250 □ 1600 □ 2000		Quantity Set	□ Fixed □ Draw-out □ Three poles □ Four poles	
YCW3-2500			□ 630 □ 800 □ 1000 □ 1250 □ 1600 □ 2000 □ 2500		Quantity Set	□ Fixed □ Draw-out □ Three poles □ Four poles	
YCW3-3200			□ 2500 □ 2900 □ 3200		Quantity Set	□ Fixed □ Draw-out □ Three poles □ Four poles	
YCW3-4000			□ 3200 □ 3600 □ 4000		Quantity Set	□ Fixed □ Draw-out □ Three poles □ Four poles	
YCW3-6300			□ 4000 □ 5000 □ 6300		Quantity Set	□ Fixed □ Draw-out □ Three poles □ Four poles	
Intelligent controller	Basic function		□ Overload long time delay protection □ Short-circuit short delay □ Short-circuit instantaneous				
	Other function		□ Earthing protection □ Load monitoring □ Ampere meter □ MCR function □ Thermo-simulating □ voltage meter □ Self-diagnosis □ Testing □ Fault records □ Communication				
	Controller power		□ AC 220V □ AC 380V □ DC 220V □ DC 110V				
	Standard configuration	□ Shunt release	□ Under-voltage instantaneous type □ Under-voltage time-delay type □ 1s □ 3s □ 5s □ 10s				
		□ Closing electromagnet	□ AC 220V □ AC 380V □ DC 220V □ DC 110V				
		□ Motor-driven energy-storage mechanism	□ AC 220V □ AC 380V □ DC 220V □ DC 110V				
		□ Auxiliary contact	□ 4 groups of changeover contacts				
	Optional configuration	□ Under-voltage release	□ AC 220V □ AC 380V				
		□ Auxiliary contact	□ 2NO and 6NC contacts □ 4NO and 4NC contacts □ 6NC and 4NO contacts □ 3NO and 3NC contacts (YCW3-1600 only have 4 groups of changeover contacts)				
	□ Locking device □ Horizontal interlock □ Vertical interlock □ Door interlock □ Others						

Note:

1. The frame size current, rated current and auxiliary control voltage must be specified when ordering.
2. Please mark "√" or fill in figure in the relative "□", if no mark, we will provide as usual.
3. The operational function of the intelligent controller and special requirement require additional cost.

YCW9X Integrated Circuit Breaker



General

Integrated circuit breaker is one of the new circuit breakers developed by advanced technology, the product is suitable for general distribution system, new energy distribution system, multi-energy distribution network, inverter and distributed power rotary motor power supply grid-connected operation and protection and other occasions, it has isolation function and small size, high breaking capacity, and other multi-functional characteristics.

Standards: IEC60947-1 ,IEC60947-2

Operating Conditions

The ambient air temperature is -5 °C ~ +40 °C(beyond the range can be reduced capacity use), and the average value of 24h does not exceed +35°C ;

The elevation of the installation site does not exceed 2000m, more than 2000m capacity reduction use;

The relative humidity of the air at the installation site does not exceed 50% when the maximum temperature is +40°C , and can have a higher relative humidity at lower temperatures, such as 90% at 20°C .Special measures should be taken for condensation occasionally caused by temperature changes;

Pollution level is level 3;

Circuit breaker main circuit installation category IV, the rest of the auxiliary circuit and control circuit installation category III;

The circuit breaker should be installed in a place where there is no explosion risk, no conductive dust,no rain and snow attack, and no enough to corrode metal and destroy insulation.

Type designation

YC W9X - 1600 / □ □ □ □

Company Code	Design code	Frame grade current	Number of poles	Rated current	Controller type	Control voltage
YC	W9X	- 1600	/ □	□	□	□
CNC	Plastic frame integrated circuit breaker	1600A	3P,4P	200, 400,630,800 1000,1250,1600A	M(default),F,3M,3H	AC220V;AC380V

YCW9X Integrated Circuit Breaker

Technical data

Type	YCW9X-1600	
Bracket rating Current Inm(A)	1600	
Rated current In(A)	200,400,630,800,1000,1250,1600	
Rated operating voltage Ue(V)	AC400V,AC800V	
Rated insulation voltage Ui(V)	1000	
Rated impulse withstand voltage Uimp(kV)	12	
Power frequency withstand voltage U(V)1min	3500	
Number of poles	3,4	
N-pole rated current In(A)	100%In	
Rated limit short-circuit breaking capacity Icu(kA)(valid value)	AC400V	55
	AC800V	32
Rated operating short-circuit breaking capacity Ics(kA)(valid value)	AC400V	50
	AC800V	20
Rated short-circuit ability Icm(kA) (Peak)	AC400V	143
	AC800V	105
Rated short-time withstand current Icw(kA)/1s(valid value)	AC400V	50
	AC800V	20
Total breaking time (no additional delay)(ms)		25
Closing time(ms)		Max70
Electrical life (s)	AC400V	maintenance-free 1500
		maintenance-free 4500
	AC800V	maintenance-free 1200
		Be maintained 3500
Mechanical life (second)	Maintenance-free	4500
	Be maintained	8500

B

Overload long delay protection

The overload and long delay protection function generally protects the cable from overload.

Overload long delay protection parameter setting

Overload protection parameter setting table

Parameter name	Adjustment range	Remark
Action current set value Ir	=(0.2 ~ 1.0)In+OFF,Adjust the step =1A.	
Protection curve type	Curve 1: Standard inverse time Curve 2: Fast inverse time Curve 3: Express inverse time (general distribution protection) Curve 4: Express inverse time limit (for motor protection) Curve 5: High voltage fuse compatibility Curve 6: Universal inverse time (I^2t)	For distribution protection, the upper limit of Ir is 1.0In. For generator protection, the upper limit of Ir is 1.25In. "OFF" indicates that the function is out.
Delay time set Tr	C01~C16	
Cooling time setting	Instantaneous,10min,20min,30min,45min,1h,2h	

Peculiarity	Current multiple(n=I/Ir)	Action characteristic	Delay error
Inactive characteristic	n ≤ 1.05	>2h No action	
Action characteristic	n>1.2	< 1h action	
Delay characteristic	n>1.2	Characteristic curve, factory default characteristic curve 3 EI(G)	±10%

peculiarity	Current multiple(n=I/Ir)	Action characteristic	Delay error
Inactive characteristic	n ≤ 0.95	>2h No action	
Action characteristic	n>1.05	< 1h action	
Action delay	n>1.05	Characteristic curve 6, generator protection characteristic curve: $t=tr\cdot(\frac{1.2}{n})^2$	±10%

The controller provides 6 overload protection characteristic curves, which are expressed as follows:

Curve 1. Standard inverse time (SI): $t=\frac{1.2}{n^{0.02}-1}$

Curve 2, Fast inverse time (VI): $t=\frac{1.2}{n-1}$

Curve 3, Express inverse time (general purpose)EI(G): $t=\frac{1.2}{n^2-1}$

Curve 4, Express inverse time (motor use)EI(M): $t=\frac{K}{1.15}\cdot\ln\frac{N^2}{N^2-1.15}$

Curve 5, High Voltage fuse Compatibility (HV): $t=\frac{1.2}{n^4-1}$

Curve 6, universal inverse time (I^2t): $t=\frac{K}{n^2}$

In the above 6 formulas: t: inverse time delay action time (seconds, s)

K: curve rate;

n: The multiple of the actual fault current relative to the long delay protection setting, that is, $n=\frac{1}{Ir}$

tr: The delay time when n is equal to some eigenvalue (seconds, s)

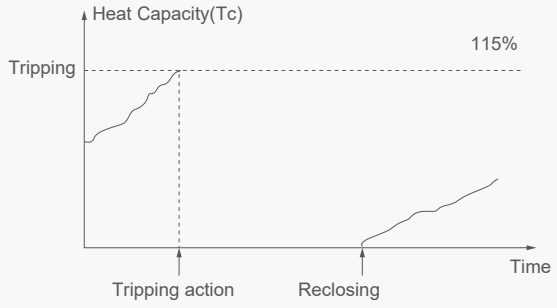

The controller loses power. The Tc increases from zero Figure 2(A) Heat capacity variation diagram without auxiliary power supply

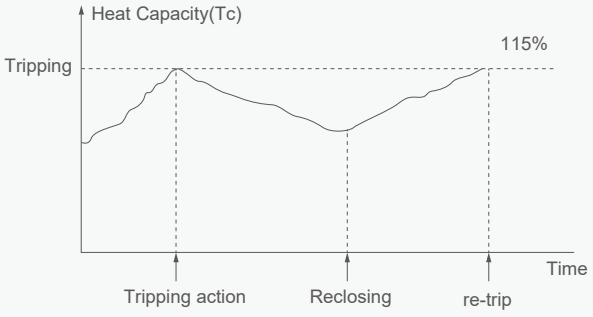

Figure 2(B) Heat capacity variation diagram with auxiliary power supply

B

Protection function

Thermal memory function

In order to prevent repeated or periodic overload, the controller tracks and records the thermal effect of the load current. When the thermal effect of the overload accumulates to a predetermined level, the trip will be caused. The way the heat capacity changes is determined by the curve chosen.

The heat capacity increases when the measured current value is greater than1.1Ir. When the circuit breaker returns from overload state to non-overload state after tripping due to overload long delay fault or inverse time short circuit fault,the heat capacity decreases exponentially. Users can set the heat capacity cooling time: instantaneous, 10 minutes, 20 minutes, 30 minutes, 45 minutes, 1hour, 2 hours. When the controller does not use the auxiliary power supply, the heat capacity is cleared to zero after the circuit breaker is broken, and the heat capacity accumulation is shown in Figure 2(A).

When the controller uses auxiliary power supply, the heat capacity decreases according to the heat dissipation law after the breaker is broken, and the heat capacity continues to change according to the current at this time on the basis of the original after re-closing. The change of heat capacity is shown in Figure 2(B).

Short circuit delay protection

Short circuit delay protection is set for Class B circuit breaker to achieve selective protection, for medium strength short circuit fault. Users can choose either fixed time mode or inverse time mode according to their needs.

3H type controller short delay protection can be optional area interlock function,when the short circuit fault occurs in the circuit breaker outlet side, short circuit delay will jump the circuit breaker instantaneously; When the short-circuit fault occurs on the outgoing side of the next level circuit breaker, the short-circuit delay is tripped after the agreed delay time. The implementation of this function needs to be combined with the use of programmable IO ports (DI and DO),DI is used to detect the area interlock signal of the next level circuit breaker, and DO is used to send the interlock signal of the upper level circuit breaker.

Short circuit delay protection parameter

Setting current: Isd		Isd=1.25~15IR+OFF,OFF Indicates that the short delay protection is disabled	
Constant time-lag Inverse time lag	Setting time tsdSetting time tsd	tsd=d0.1s~d1.0s+OFF, A d before the time indicates a definite time limit	
	Action time (s)	T=tsd	
	Setting time tsd	tsd=0.1s~1.0s+OFF,OFF Indicates alarm only without tripping	
Inverse time lag	Action characteristic	Actions between 0.9 and 1.1 Isd	≤ 0.9: No action
	$T=\max\{Tsd,(\frac{s*IR}{I})^2\times Tsd\}$		>1.1: Delay action
precision		Accuracy ±10% (inherent error ±40ms)	
Thermal memory function		15min+OFF (Factory default OFF, only valid for inverse time limit)	

Note:IR=oFF when ,Isd=1.25~15In+OFF;

Type 2, type 3 short delay inverse time delay characteristic curve 1~6, with overload long delay, but the curve speed is 10 times faster;

B

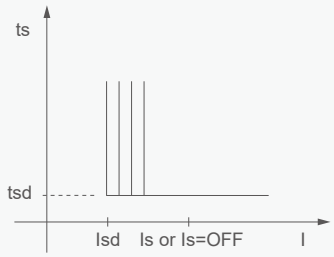

FIG.3(A) Short-circuit short-delay fixed time diagram

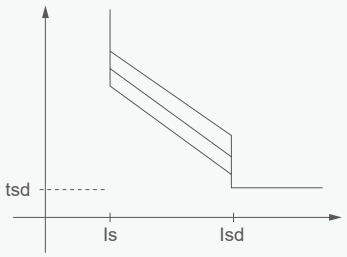

Figure 3(B)Inverse time diagram of short circuit delay

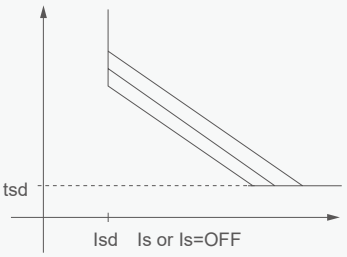

FIG.3(C)Inverse time diagram of short circuit delay when Isd=OFF

Use tips

1. type 2 and type 3 short delay inverse time delay characteristics are the same as overload long delay delay characteristics, only the action delay time is 1/10 of the long delay.
2. When the fault occurs, the protection is in a cold state (that is, the heat capacity =0), whether it is a long delay action or a short delay action, the action delay time is not less than the short delay time set value. In this case, the delay characteristic of short delay protection Is related to the Isd and IS setting values:

   1) When Isd<1s or 1s=OFF, the controller only has a time-limit function; See Figure 3(A).

   2) When Isd>1s, the controller has both inverse time limit and fixed time limit protection functions; See Figure 3(B).

   3) When Is ≠ OFF,Isd=OFF, the controller only has the inverse Time protection function, then the inverse time characteristic curve is called IDMT(InverseDefinite Minimum Time) inverse time characteristic. See Figure

   3(C). For IDMT inverse time feature, refer to GB14048.1-2006 for the note 2.4.27. 4) When Isd=Is=OFF, the short delay protection function is disabled.
3. When the fault occurs, the protection is in a hot state (that is, the heat capacity ≠ 0), then the action delay time is not limited by the set value of the short delay time limit time.

Short circuit instantaneous protection

The instantaneous protection function is to prevent the solid short circuit of the distribution system, such faults are generally phase faults, short circuit current is relatively large, need to be quickly disconnected.

Characteristic parameters of short circuit instantaneous protection

Setting current Ii(A)	box I	1.0In~50kA+OFF
	box II	=1.0In~75kA+OFF
	box III	=1.0In~100kA+OFF
Action characteristic	0.85~1.15Ii In-between action	≤ 0.85 Inaction
		> 1.15 Instantaneous action (natural action time ≤ 50ms)

MCR and HSISC Protection

The on-off/off (MCR) and off-limit trip (HSISC) functions are instantaneous protection functions. MCR protection protects the switching ability of the circuit breaker to prevent the switch damage caused by exceeding the switching limit current when the circuit breaker is switched on. The protection works in the moment of opening and closing of the circuit breaker (within 100ms). HSISC protection protects the limit carrying capacity of the circuit breaker, prevents the switch from carrying more than the limit breaking current, and takes effect after closing 100ms.

MCR and HSISC Protection parameter setting table

Parameter name	Parameter name	Set the step size
MCR Operation current set value	30~100kA+OFF	1kA
HSISC Operation current set value	30~100kA+OFF	30~100kA+OFF 1kA

Use tips

1. MCR and HSISC setting values are generally set when the circuit breaker is delivered, according to thebreaking capacity of the circuit breaker, and are not adjustable by the end user.
2. M-type controller factory default MCR=OFF,HSISC=OFF; H type factory default MCR=30kA,HSISC=50KA.

Protection function

Neutral line protection

Neutral line protection is designed to adapt to the increasingly complex distribution system and the increasing number of neutral line faults. It is suitable for 3P+N or 4P circuit breaker configurations. The controller provides five neutral line protection modes: 50%N, 100%N, 160%N, 200%N and 0FF. When the neutral line is thin, it can be protected by 50%N method; When the neutral line is the same as other phase lines, it can be protected by 100%N. When the harmonics in the power grid are relatively serious, 160%N or 200%N can be used for protection. The neutral line protection characteristic is the same as the overload long delay action characteristic.

Neutral line protection parameter setting table

Protection mode	Long delay	Short time delay	Instantaneous movement	Ground connection	Scope of application
50%N	Ir/2	Isd/2	Ii	Ig	Distribution system where the cross-sectional area of the neutral line is equal to 1/2 of the cross-sectional area of the phase line
100%N	Ir	Isd	Ii	Ig	Distribution system in which the crosssectional area of the neutral line is equal to the cross-sectional area of the phase line
160%N	1.6Ir	1.6Isd	Ii	Ig	Distribution system where the crosssectional area of the neutral line is 1.6 times that of the phase line
200%N	2Ir	2Isd	Ii	Ig	Distribution system where the crosssectional area of the neutral line is twice the cross-sectional area of the phase line
OFF	/	/	/	/	The neutral protection function is disabled

Use tips

1. The 1/2N mode is used as an example to illustrate the actual situation of neutral line protection: If a circuit breaker sets Ir=2000A,Isd=8000A,Ii=24000A,Ig=600A, the neutral line Ir=1000A,Isd=4000A,Ii=24000A,Ig=600A. When the current of the neutral line is greater than 1200A(1.2Ir), the neutral line long delay protection is enabled.
2. The fundamental (50Hz) currents in the neutral line of the three-phase load balancing circuit cancel each other, but 3, 9, 15... Odd times of equal order third harmonic currents are not cancelled but superimposed, which is why neutral lines are often overloaded (1). Therefore, the neutral line protection plays an effective role in protecting the cable heating aging caused by the 3n harmonics of the neutral line. IEC60364 Neutral line protection is required in this case.
3. The use of neutral line protection in 3P+N structure should pay attention to the design requirements of the distribution system. If the design requirements of the distribution system cannot break the neutral line but still have specific requirements for the neutral line overcurrent protection, the protection function can be activated.
4. In the IEC60364 standard also stipulates that for TT, TN-S, IT systems, if the neutral line cross-sectional area is smaller than the phase line, neutral line overcurrent protection should be used; Neutral line protection should not be used in TN-C systems.

Earth fault protection

The IEC60364 grounding fault is defined as a short circuit fault between the phase line and the ground or grounded metal pipe structure or device shell. Ground fault protection applies to the TN system, that is, the power distribution system where the neutral point of the power supply is grounded and the device enclosure is connected to the neutral line. The ground fault current can reach kA level strength.

It varies according to the specific details of the TN system and the circuit breaker configuration. There are three main modes of ground fault protection:

First, NFPA/EGFP mode;

Second, limited (REF)/ unrestricted (UEF) grounding protection;

Third, standby ground protection (SEF).

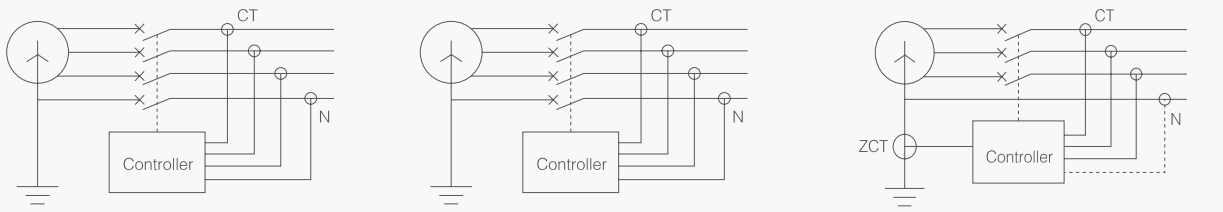

4(A), 4P circuit breaker ground protection　4(B)Grounding protection for 3P+N circuit breakers　4(C)Ground current type grounding protection

Figure 4, NFPA/EGFP ground fault protection system schematic

Protection function

NFPA/EGFP Ground protection mode

1. This Protection mode is a protection policy developed by the National Fire Protection Association for TB systems in the NFPA70 standard, called Ground Fault Protection of Equipment (EFGP). It has the following points:
2. The neutral point of the distribution system must be directly Grounded (Solidly Grounded), and the grounding circuit cannot be strung into any resistance or reactance.
3. The maximum current setting value of the protection cannot exceed 1200A; When the fault current is greater than 1200A, neither the inverse time limit nor the fixed time limit delay shall exceed 1s.
4. There are two types of NFPA/EGFP ground fault protection:First, the vector sum mode (also known as residual current mode, type T), that is, the ground fault current is equal to the vector sum of the phase line and neutral line current. Figure 4(A) and 4(B) show the vector sum mode of the ground current of 4P and 3P+N respectively.Second, the Ground current mode (W type), that is, an independent current transformer detects the current of the Ground Return circuit of the power supply, and the current detected by other phase line transformers does not participate in the protection. As shown in Figure 4(C).

Use tips

1. The location of the ZCT configuration in the ground current mode is very important for the effectiveness of protection. It must be installed in the Ground Return circuit of the power supply (transformer). The ground return circuit refers to the neutral point of the transformer grounding wire, and the neutral line is the circuit between the point and the earth.
2. If the 3P circuit breaker is configured in a TN system and requires ground fault protection, it must be used in 3P+N mode (as shown in Figure 4(B)) or ground current mode (as shown in Figure 4(C)). Otherwise, disable the grounding fault protection function to prevent the controller from misoperating.
3. In the case of FIG. 4(B) and 4(C), the maximum distance between the neutral line CT or ZCT and the circuit breaker is less than 10 meters. Interference caused by excessively long signal transmission may lead to misoperation.

NFPA Ground protection mode characteristic parameters

Setting current (Ig)		In ≤ 1200A In>1200A	Ig=(0.2~1)In+OFF; Ig=240~1200A+OFF;	Step: 1A. OFF indicates that the function is disabled
Action characteristic		0.8~1.0Ig In-between action	≤ 0.8 Ig Inaction	
			≥ 1.0 Ig Delay action	
Setting time (tg)		0.1~1.0s		
Action time	Inverse time lag	$T=\max\{(\frac{1}{n})^2 Tg, Tg\}$;$n=\frac{1}{Igm}$;$Igm=\begin{cases}=In, In<1200A\\=1200A, In\geq 1200A\end{cases}$ Error: ±15%(inherent ±40ms)		
	Constant time-lag	T=Tg; Rrror: ±40ms≤ 0.9: No action		
Ground area interlock(ZSI)		The controller must be equipped with ZSI function to have this; One switch output (DO) is set to ZSI output; One switch input (DI) is set to ZSI input;		

Use tips

1. The factory default protection mode of the controller is NFPA. When current (Ig) is set to OFF, the function is turned off;
2. In order to facilitate switching between inverse time limit and fixed time limit mode, when setting Tg parameters, if 0.10~1.00 is displayed, it means that the current setting value is inverse time limit If the value d0.10 to d1.00 is displayed, the current value is a specified time limit.
3. For vector and form, transformer breakage will directly lead to serious deviation of current vector and sum, resulting in misoperation. Therefore, once the controller self-diagnosis function detects the fault of the transformer broken line, the protection mode will be automatically shielded and the self-diagnosis alarm will be started.

YCW9X Integrated Circuit Breaker

Protection function

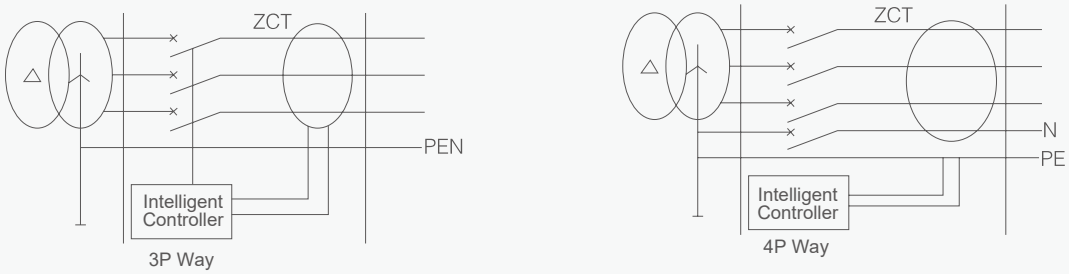

Figure 5.Schematic of leakage protection structure (Note: ZCT is leakage transformer)

Earth alarm

The ground alarm function and the ground protection function of the Type 3 controller are independent of each other, and exist at the same time, with different setting parameters.

Leakage protection

Leakage protection is applicable to the leakage fault caused by insulation damage or the leakage fault caused by human contact with the conductive part of the leakage. The leakage current I △ n is directly expressed in amperes and has nothing to do with the rated current of the circuit breaker. The zero-sequence sampling method is adopted, and a zero-sequence current transformer is required. This kind of transformer has high sampling accuracy, high sensitivity and is suitable for small current protection.

Leakage protection characteristic parameters

Setting current (A)	I △ n	0.5~30A+OFF(Level difference 0.1A,OFF indicates exit)	
	Action characteristic	in (0.8~1.0)I △ n In-between action	≤ 0.8I △ ninaction
			>1.0I △ nDelay action
Delay (s)	Tg(s)	0.06,0.08,0.17,0.25,0.33,0.42,0.5,0.58,0.67,0.75,0.83,instantaneous	
	precision	±10%(Inherent 40ms)	

Setting value of leakage protection delay time

Setting time	0.06	0.08	0.17	0.25	0.33	0.42	0.5	0.58	0.67	0.75	0.83	Instantaneous
Multiple of fault current	Max disconnect time (s)											
I △n	0.36	0.5	1	1.5	2	2.5	3	3.5	4	4.5	5	0.02
2I △n	0.18	0.25	0.5	0.75	1	1.25	1.5	1.75	2	2.25	2.5	0.02
5I △n/10I △n	0.072	0.1	0.2	0.3	0.4	0.5	0.6	0.7	0.8	0.9	1.0	0.02

Leakage protection can also be divided into two sections, inverse time limit and fixed time limit; When I/ I △ n<5 is the inverse time limit, when I/ I △ n ≥ 5 is the fixed time limit; Leakage protection characteristic curve and protection conditions are as follows:

$$T=\begin{cases}(\frac{I_{\triangle n}}{I})\times 6\times Tg & (I/I_{\triangle n})\ n<5)\\ (6\times Tg)/5 & (I/I_{\triangle n})\ n\geq 5)\end{cases}$$

For example, if the leakage delay time is set to Tg=0.06s, when I=I △ n,t=0.36s; When I=2I △ n,t=0.18s; When I ≥ 5I △ n,t=0.072s;

Load monitoring

Load monitoring can be used to forecast alarms and control branch loads. Action basis can be based on power or current action, there are two modes of action: Mode 1: Two loads can be independently controlled. When the operating parameters exceed the setting value, the corresponding load monitors the DO delay action (the corresponding DO function needs to be set), and controls the load splitting of two branches to ensure power supply for the main system. Mode 2: Generally used to control the load of the same branch, when the operating parameter exceeds the starting value, "load one" DO delay action (the action form can be pulse mode or level mode) to break the branch load; If the running parameter value is lower than the return value after breaking, and after the delay setting time, "load 1" DO return, "load 2" DO action (the action form can be pulse mode or level mode), switch on the broken load, and restore the system power supply.

B

Measuring function

Current measurement

The controller can measure three line currents (Ia, Ib, Ic), neutral line current (IN), ground current (Ig) or leakage current (I □ n) in real time, suitable for 50Hz/60Hz power grids. Measurement method: true RMS value or fundamental RMS value; Measuring range :Ia, Ib, Ic, IN not less than 25 times In(circuit breaker rated current). Measurement accuracy: within the range of 2In, the measurement error is ±1.5%; ±5% above 2In;

(Use tip) : When the measured value is less than the lower limit of the range, 0 is displayed.

Voltage measurement

Real-time measurement of line voltages (Uab, Ubc, Uca, UMAx) and phase voltages (Uan, Ubn, Ucn) for 50/60Hz power grids. Voltage measurement depends on the grid structure and circuit breaker configuration.

Measurement method: true effective value;

Measuring range :30V ~ 1200V(when the voltage is lower than the lower limit, it is displayed as 0V);

Measurement accuracy :±1.5%.

Self-diagnostic information recording

The self-diagnosis function of the controller is mainly used for the inspection and maintenance of its own operating status. It can detect the transformer broken line, magnetic flux broken line, circuit breaker rejection, contact maintenance, AD fault, XT clock fault, E2ROM fault and other own faults in real time. When the self-diagnosis fault occurs, the current self-diagnosis fault information can be found in the “Current alarm” menu option A DO alarm signal can be sent, and the self-diagnostic information is recorded in the alarm record.

Self-diagnostic fault information table

Self-diagnosis fault display content	Self-diagnostic fault description	Troubleshooting method
E-L1 E-L2 E-L3 E-LN	Indicates that the current transformer L1, L2, L3, and Ln are disconnected	Check whether L1, L2, L3, Ln wires of the secondary end of the current transformer are broken or broken, or whether the connection between L1, L2, L3, Ln and the circuit board is loose.
E-CT E-11	The controller trip coil is disconnected	Check whether the tripping magnetic flux and the circuit board are properly connected;
E-JD E-12	The controller does not detect that the circuit breaker is successfully opened	Check whether the small switch detection mechanism works normally;
E-13	Contact wear value >100%	The main contact needs to be maintained. After the maintenance is complete, manually reset the contact Contact wear value is restored to 0
E-02	The system A/D sampling circuit is faulty.	The controller cannot be used. Contact the manufacturer
E-01	The external memory chip is faulty	Power off and restart to see whether the fault disappears. If the fault still exists, it is required To replace the external E2ROM memory chip

YCW9X Integrated Circuit Breaker

DO Feature

The controller has four sets of independent programmable I/O ports, which can be set according to the needs of the customer, and the internal relay contact output (contact capacity of 250VAC/5A,30VDC/5A). Relay definable functional states:

F and M controllers output DO parameter Settings				
Function setting	Short circuit instantaneous fault trip	Ground or leakage fault trip	Ground or leakage fault trip	Short circuit delay fault trip
	Overload long delay fault trip	Fault trip	Load monitoring 1 Unload the output	Load monitoring 2 Unload output
	The system self-diagnoses faults	Power grid fault state alarm	Remote switching	Remote closing
Execution mode	The fault trip switch signal, after the fault disappears, press the light clearing key to return		Others are 100ms pulse signal output	

3H controller output DO parameter setting				
Function setting	Be common	Give an alarm	Fault trip	Self-diagnostic alarm
	Load I unloading	Load II unloading	N-phase fault	Long delay trip
	Short delay trip	Instantaneous trip	MCR trip	HSISC trip
	Ground trip	Leakage trip	The Iunbal trip	A trip is required
	B trip is required	A C trip is required	N trip is required	Undervoltage trip
	Overvoltage trip	The Uunbal trips	Underfrequency trip	Overfrequency tripping
	Phase sequence trip	Reverse power trip	Overload warning	Earth alarm
	Leakage alarm	Iunbal call the police	Call the police with "A"	Call the "B" alarm
	Need to use C alarm	Need N alarm	Undervoltage alarm	Overvoltage alarm
	Uunbal, call the police	Underfrequency alarm	Overfrequency alarm	Reverse power alarm
	Phase sequence alarm	Communication failure	ZS1 Output	Remote switching
	Remote closing			
Execution mode	Normally open level	Normally closed level	Normally open pulse	Normally closed pulse

B

DI Input function Area Selective Interlocking (ZSI)

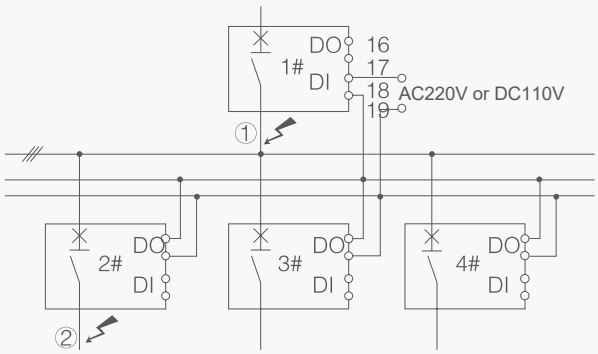

Figure 6 Schematic diagram of regional interlocking

Zone selective interlocking (ZSI) includes short circuit interlocking and ground interlocking, where two or more circuit breakers are connected as shown in Figure 15:

1. when the short circuit or ground fault occurs in the position of the lower circuit breaker (2# ~ #4circuit breaker) outlet side (such as position 2), the lower circuit breaker instantaneously trips, and sends a regional interlock trip signal to the upper circuit breaker (#1 circuit breaker); The upper circuit breaker receives the regional interlock trip signal and delays according to the parameters set by the short circuit or ground protection. If the fault current is cancelled during the delay of the upper circuit breaker, the protection returns and the upper circuit breaker does not operate. If the fault current does not cancel after the lower circuit breaker trips, the upper circuit breaker acts according to the set parameters of short circuit or ground protection to cut out the fault line.
2. When the short circuit or ground fault occurs between the upper circuit breaker (#1 circuit breaker) and the lower circuit breaker (2# ~ #4 circuit breaker) (such as position ①), the upper circuit breaker does not receive the regional interlock signal, and therefore the instantaneous trip, quickly cut the fault line.

Use tips

The ZSI function must be equipped with a set of DO(ZSI output in level mode) and a set of DI(ZSI input) as the electrical connection of the upper and lower circuit breakers; Please inform the manufacturer when ordering. Zone interlock is only available on 3H products.

Zonal selective interlocking (ZSI) is designed to reduce the fault stress that electrical distribution equipment suffers during short circuits or ground faults. The ZSI system works with a pre-collaborative(coordination of operating parameters between distribution devices) distribution system, which reduces the stress (damage) caused by faults by reducing fault clearance time, and maintains coordination between short-circuit or ground fault protection devices in the system.

Test function

The controller can simulate the instantaneous trip action for the trip test during field debugging, regular inspection or overhaul to check the cooperation between the controller and the circuit breaker. After the completion of the test, display the mechanism action time or test state.

Use tips

1. This function can only be used during field deb1 debugging or maintenance of the circuit breaker, do not use it at will during normal operation;
2. Before each closing, the red reset button on the control panel must be pressed to close the circuit breaker again and put into operation;

Fault record and query function

When a fault trip occurs, the controller automatically records the fault current and operation time. You can press “Search” to query the fault record.

Self-diagnostic function

The self-diagnosis function of the controller is mainly used for the inspection and maintenance of its own operating status, and can detect the transformer signal breakage, magnetic flux breakage, circuit breaker rejection, and self-fault in real time.

Indicator full display function

The controller can light up all the nixie tubes and indicators, this function is used to check whether all the light emitting devices are normal.

Real-time Clock (RTC) function (optional)

The controller provides the real-time clock function to display the current date and time and record the fault time when a fault occurs.

Voltmeter function (optional)

The controller can be equipped with voltmeter, voltmeter can display the current three-phase line voltage Uab, Ubc, Uca, phase voltage Uan, Ubn, Ucn, voltage frequency F in real time;

Temperature protection function (optional F)

Control can be optional circuit breaker bus temperature protection function, through the external temperature acquisition module of the company, each pole bus is installed with a temperature sensor, the module can collect 3 or 4 pole circuit breakers; The controller and the temperature acquisition module are connected by RS485, and the collected temperature is displayed on the controller. When the temperature is detected to reach the setting

Value initiates delay and trip action.

Temperature Start value =25 to 160 ° C +OFF. OFF indicates that the temperature protection function is disabled and the return difference is 5 ° C.

Protection start delay =1~1800s+OFF,OFF indicates only alarm but no action.

(Usage instructions) : When the temperature alarm only does not trip, the alarm starting value = the set temperature starting value, the starting delay of 1s, the return difference is 5 °C ; Alarm Lcd backlight yellow, self-diagnosis display E-03; If the relay output is required, the relay can be set to 11.09 system selfdiagnosis fault;

B

Pressure recloser function (F type optional)

According to the Notice of the State Grid Corporation on the issuance of distributed power grid-connected opinions and Specifications, the special switch should have the function of losing voltage opening and checking voltage closing, and the setting value of losing voltage opening should be adjusted to 20%UN, 10 seconds, and the setting value of detecting voltage should be adjusted to greater than 85%UN. According to the requirements of the code, the intelligent controller adds the function of “loss of pressure opening and detection of pressure closing”.

Loss of pressure opening function

When the minimum value of the three line voltages is less than the set value of the no-voltage start, after the set delay time, the switch control passive contact action, the output mode is 100ms pulse, and the window displays “U-F”.

If the failure of opening is caused by the abnormal control loop in the process of opening, “E-09” will be displayed in the self-detection information, and the opening pulse signal will not be output at this time.

After checking and eliminating the fault of the opening loop, press the reset key to recover

Pressure loss switching function parameter table

Parameter name	Adjustment range	Adjust step size	Factory default	Remark
Protect startup settings	60V~1200V	1V	80V	80V=(20%×UN)=(20%×400V)
Delay time set value	0.2~60s	0.1s	3.0s	
Execution mode	Switch off/switch off		Off	
Output mode	Switching relay 100ms pulse output			

Pressure closing function

When the minimum value of the three line voltages is less than the set value of the no-voltage start, after the setting delay time, the closing control passive contact action, the output mode is 100ms pulse, and the window displays “U-H”.

If the closing failure is caused by the abnormal control loop during the closing process, “E-09” will be displayed in the self-detection information, and the closing pulse signal will not be output at this time. After checking and eliminating the fault of the closing loop, press the reset key to recover.

Pressure closing function parameter table

Parameter name	Adjustment range	Adjust step size	Factory default	Remark
Protect startup settings	60V~1200V	1V	340V	340V=(85%×UN)=(85%×400V)
Delay time set value	0.2 ~ 60 s	0.1s	1.0s	
Execution mode	Turn off/turn off		Close	
Output mode	Closing relay 100ms pulse output			

Communication function

H-type controller can realize telemetry, remote control, remote adjustment, remote communication and other functions by MODBUS protocol through communication port. The output of communication port adopts photoelectric isolation device, which is suitable for strong electrical interference environment. For details of the communication, see Type H Communication Protocol.

YCW9X Integrated Circuit Breaker

Controller panel diagram

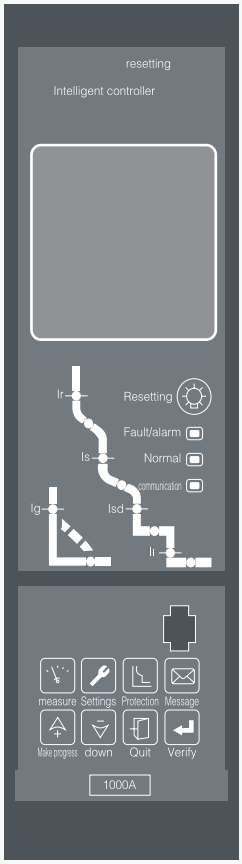

3M,H Type controller panel diagram

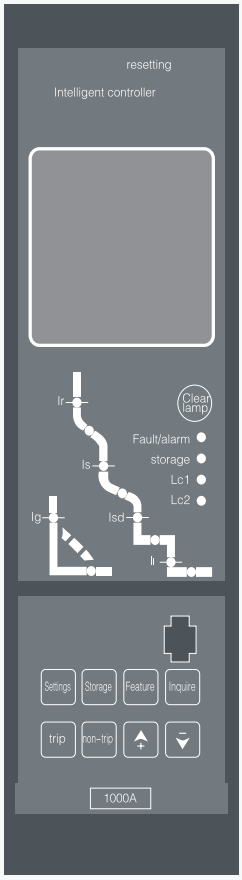

F-type controller panel diagram

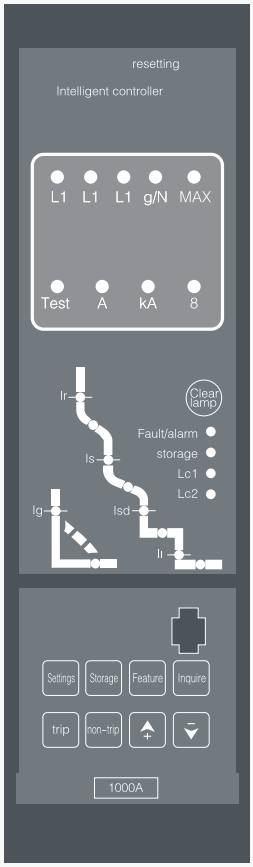

M Controller panel diagram

YCW9X Integrated Circuit Breaker

Controller selection function list

Type specification	M Type	F Type	3M Type	3H Type	Temperature controller
Panel feature	Nixie tube +LED+ button	Liquid crystal display +LED+ button	Liquid crystal display +LED+ button	Liquid crystal display +LED+ button	Nixie tube +LED+ button
Basic protection (four-stage protection)	LSIG	LSIG	LSIG	LSIG	Can cooperate with our company F Series intelligent controller Used in combination or independently Use to achieve temperature mining Set, overtemperature protection or alarm Alarm output, data remote And other functions.
Long delay protection curve selection	●	●	●	●	
Neutral line overcurrent protection	●	●	●	●	
Load monitoring	○	○	○	●	
Programmable relay output	○	○	○	●	
Protection for MCR/HSIOC	○	○	○	○	
Current imbalance protection			●	●	
Leakage protection	○	○	○	○	
It needs to be measured by electric current			●	●	
The maximum current protection is required			●	●	
Voltage measurement		○	○	●	
Voltage protection (over/ under voltage)			○	●	
Voltage unbalance protection			○	●	
Power/power factor measurement			○	●	
Reverse power protection			○	●	
Power protection is required			○	●	
System frequency measurement or protection		○	○	●	
Harmonics, waveform measurement			●	●	
The detection has the function of pressure coincidence		○			
Temperature protection		○			
485 Communication function		○		●	
Breaker contacts are worn			●	●	
Transformer broken line self-diagnosis	●	●	●	●	
Magnetic rupture self-diagnosis	●	●	●	●	

Note: ● - Basic function: ○ - co-option function;

YCW9X Integrated Circuit Breaker

Wiring diagram

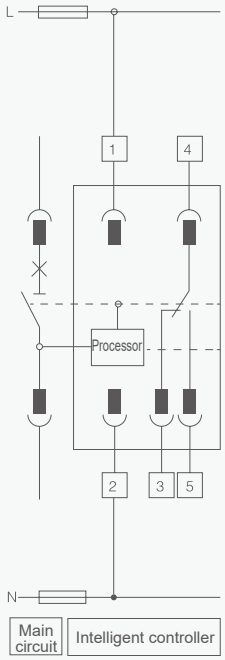

Manual secondary wiring diagram

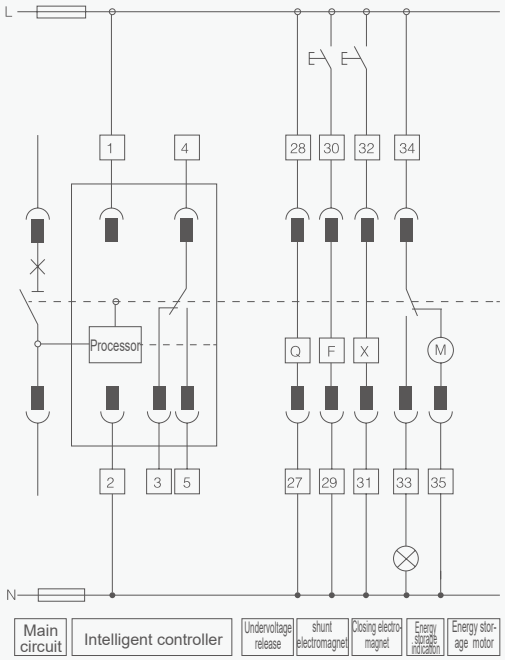

Electric secondary wiring diagram

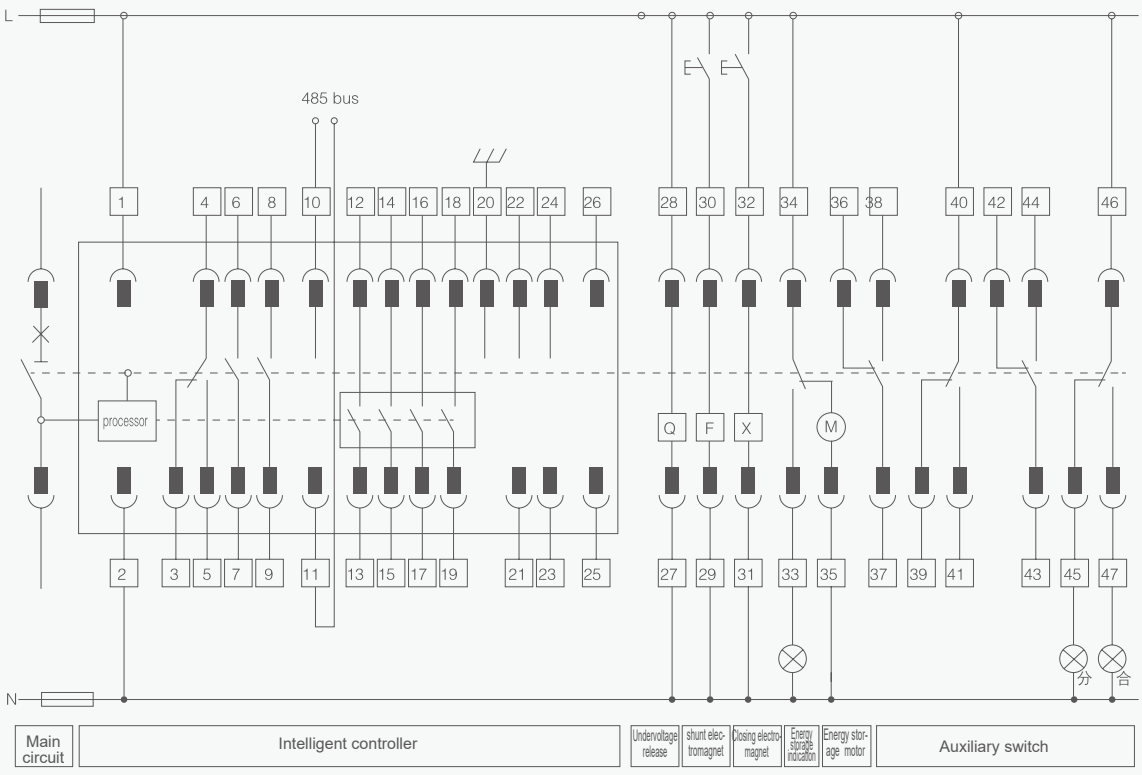

Fully functional secondary wiring diagram

YCW9X Integrated Circuit Breaker

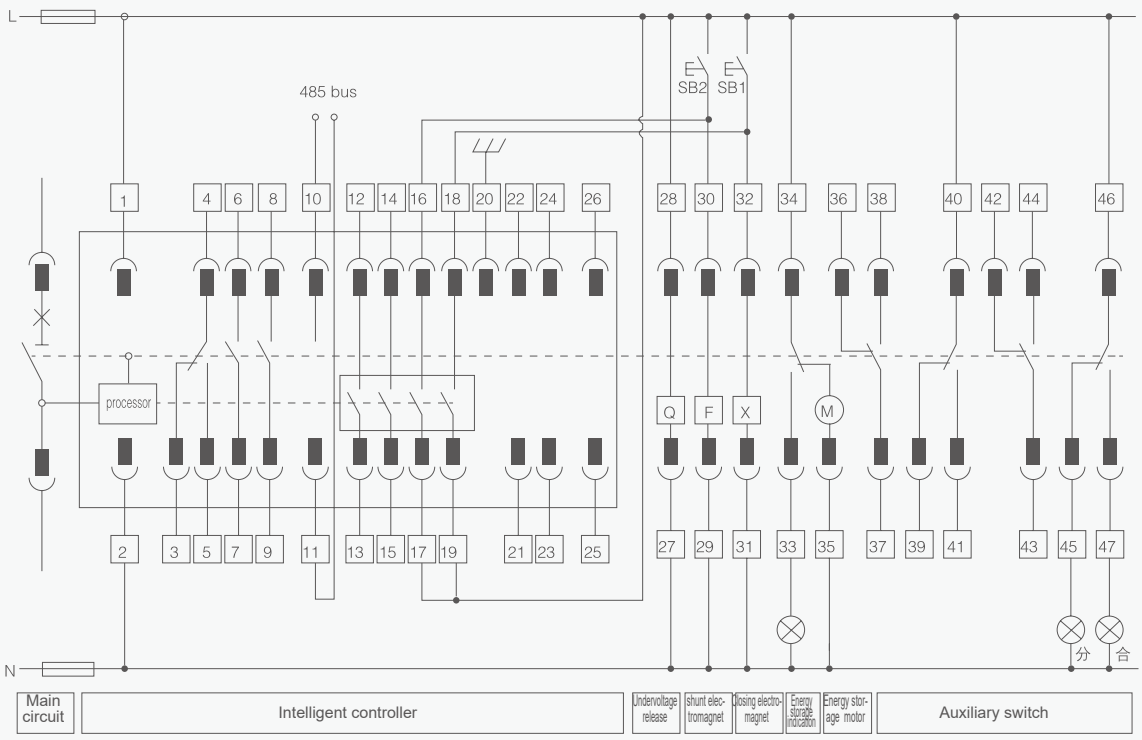

Check voltage reclosing secondary wiring diagram

Controller terminal definition			
Serial number	Wire number	Function description	Remark
1	1,2	Auxiliary power input	M type factory default (serial number 1-5) H type factory default (serial number 1-11)
2	3,4,5	Fault trip contact output (4# is the common end)	
3	6,7	Circuit breaker status auxiliary contact 1 Output	
4	8,9	Circuit breaker status auxiliary contact 2 output	
5	20	Protected area (PE)	
6	10,11	RS485 communication port leads terminals A and B	
7	12,13	Relay (D01) contact output	
8	14,15	Relay (D02) contact output	
9	16,17	Remote control tripping relay contact Output (D03)	
10	18,19	Remote closing relay contact output (D04)	
11	21,22,23,24	Voltage measurement input: N, A, B, C	
12	25,26	3P+N structure is connected to the neutral line transformer; Connect the leakage transformer ZCT1 for leakage protection	Order specification

Use tips

Q- undervoltage release device (can be connected to the “emergency stop” button when in use); X-closed electromagnet (normally closed auxiliary contact can be connected in series when in use); SB2- manual switch button; F-shunt trip device (normally open auxiliary contact can be connected in series when in use);M- motor; SB1- Manual closing button;

Communication network

For details about the communication network of the controller, see the Communication Network Description of the Controller 3.

YCW9X Integrated Circuit Breaker

Precautions for operation and maintenance of the controller are as follows:

1. The controller shall be operated carefully according to the requirements of this Manual.
2. After assembling with the circuit breaker, the protective cover should be sealed during normal operation to prevent panel damage.
3. the normal operation should often check the controller system self-diagnosis information or alarm information, found problems should be analyzed and processed in time.
4. Should regularly check the fastening of the connection parts, if loose should be tightened in time.
5. After the fault trip, the cause of the fault should be carefully analyzed, and the red mechanical reset button on the panel can be put into use again after the fault is removed.

Attachments

Leakage transformer

When the earth protection selects the leakage type, it is necessary to add the leakage transformer (ZCT), and its installation size is shown in the figure:

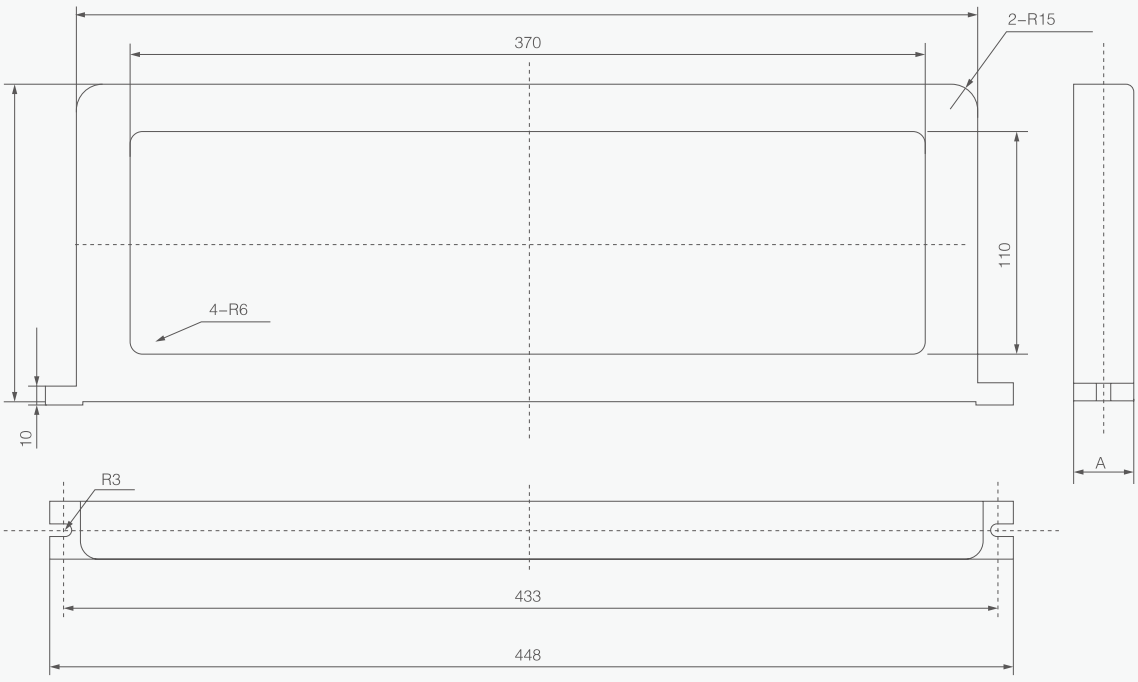

B

3P+N Configured neutral line transformer

When the controller is 3P+N, the external neutral transformer installation dimensions are shown in the following figure.

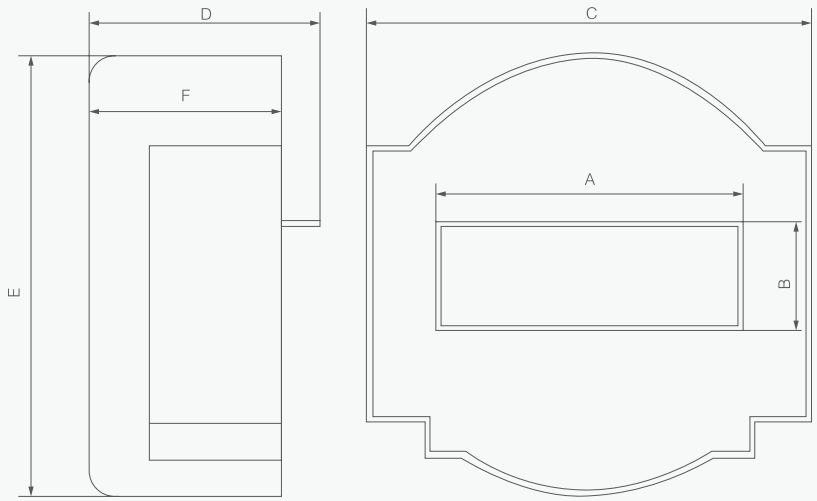

Standard 3P+N pole transformer appearance diagram

3P+N External neutral wire transformer installation size table (size unit mm)						
	A	B	C	D	E	F
Box I transformer	60	20	90	44	90	37
Box II & III transformer	90	30	108	44	105	37

Special custom external N-pole transformer

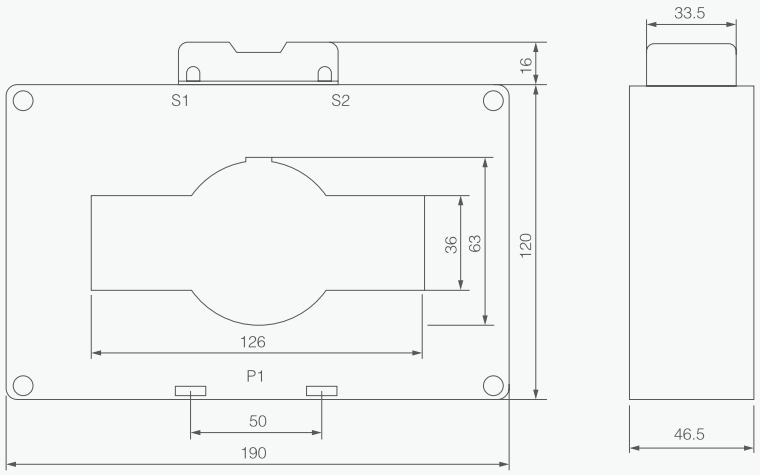

Hint

1. N pole transformer only hollow transformer, no speed saturation transformer; The cable length between the controller and the controller is less than 10m.
2. If you have any other size requirements, please contact us.

YCW9X Integrated Circuit Breaker

Temperature protection module

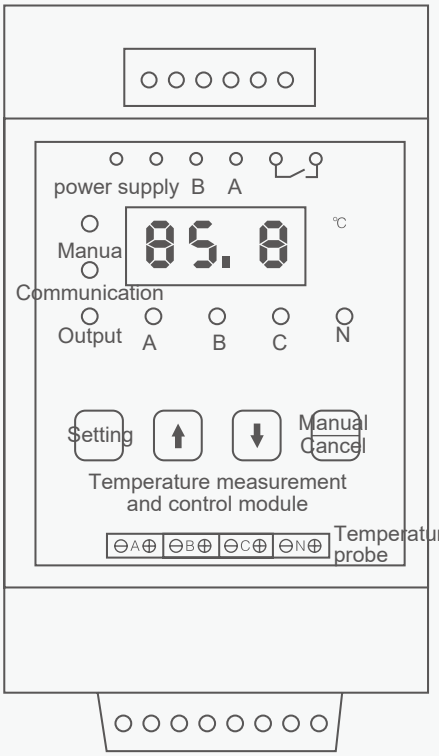

WK-200
Product appearance drawing

WK-200 temperature acquisition module is a newly developed module for circuit breaker temperature measurement and control. Its characteristics are as follows:

1. Can be used with the company's series of intelligent controller or independent use, to achieve temperature collection, overtemperature protection or alarm output, data remote and other functions.
2. With the temperature sensor, the temperature of up to 4 busbars can be collected (with 3-pole or 4-pole switch).
3. Equipped with one RS485(using MODBUS protocol) interface, you can achieve data communication with the company's controller or other equipment.
4. This module can set temperature protection parameters independently, equipped with 1 relay output contact; According to user requirements can be used for over-temperature alarm/start cooling/overtemperature
5. switch and other functions.

Hint

1. N pole transformer only hollow transformer, no speed saturation transformer; The cable length between the controller and the controller is less than 10m.
2. If you have any other size requirements, please contact us.

Product parameter

1. Working power supply :AC220V or DC24V, ≤ 2W, error ±20%(instructions when ordering)
2. Input specifications :1~4 temperature probes (instructions when ordering)
3. Relay capacity :AC250V/10A or DC30V/10A
4. Measuring range :0~200°C , error ±1%
5. Communication: one RS485 communication (support Modbus communication protocol)
6. Overall size :L102×W55×H45mm

YCW9X Integrated Circuit Breaker

Set parameters

item	Set range	Initial value	remarks
Temperature protection start value	10°C ~160°C	150°C	If the current temperature is higher than the start value, control the output
Temperature protection returned value	9C~159C	145°C	If the current temperature is lower than the returned value, the output stops
Correspondence address	1~255	1	
Communication baud rate	/	9.6 k	1.2k,2.4k,4.8k,9.6k,19.2k

Operation instruction

1. Temperature query: The main screen displays the current maximum temperature of TA,TB,TC,TN. Press (up) or (Down) to switch the temperature of TA,TB,TC,TN.
2. Parameter modification: click (Setting) to enter parameter setting; If the digital tube is blinking and A is steady on, it indicates that the parameters are being set.

   Press (Up) or (Down) to modify the current parameter. Click (Settings) to save the current parameter and switch to the next parameter.

   Tip: Click (Settings) when A,B,C,N cycle light,A represents the start value,B represents the return value,Crepresents the communication address,N represents the communication baud rate); Click the (Manual/Cancel) key to cancel the current setting and exit the setting state.
3. Relay manual output: in the main interface, click (manual/cancel) key to switch manual/automatic relay output; 【 Manual 】, 【 Output 】 light is lit to manual output mode; (Manual) When the lamp is off, it is in automatic working mode, and the output is automatically controlled according to the temperature parameter set by the module. When there is (output), the lamp is on.
4. Temperature sensor disconnected detection: When a phase temperature sensor is disconnected or not connected, (--) is displayed when querying the phase temperature, please remove the exception in time.

YCW9X Integrated Circuit Breaker

Frame/plastic integrated circuit breaker structure diagram



leakage current transformer



Secondary terminal



Opening mechanical lock



Auxiliary contact



Special motor
for energy storage



Connecting plate



Circuit breaker body



Mechanical interlock



Closing electromagnet



Phase partition plate



Shunt release



Mounting bracket



Undervoltage release



Intelligent controller



Circuit breaker panel



Door frame

YCW9X Integrated Circuit Breaker

Adapter bar Size (optional)

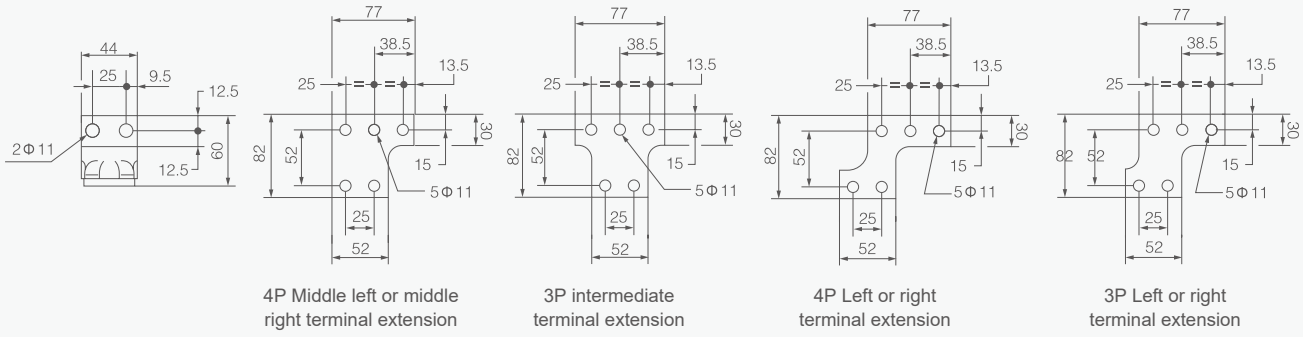

4P Middle left or middle right terminal extension

3P intermediate terminal extension

4P Left or right terminal extension

3P Left or right terminal extension

Middle left or right expander for 4 poles

Middle expander for 3 poles

Left or right expander for 4 poles

Left or right expander for 3 poles

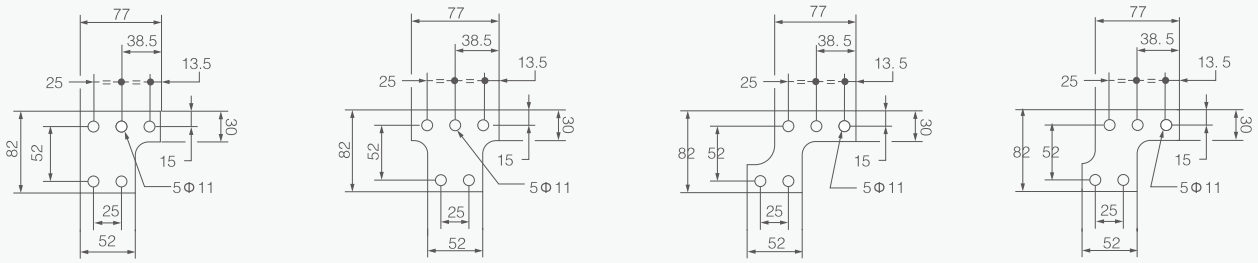

A Sectionalized view

Recommended size and quantity of external bronze plate							
Model number	Maximum working current	T:40°C Number of busbars		T:50°C Number of busbars		T:60°C Number of busbars	
		5mm thickness	10mm thickness	5mm thickness	10 mm thickness	5mm thickness	10mm thickness
800A	800	2b.50×5	1b.50×10	2b.50×5	1b.50×10	2b.50×5	1b.50×10
1000~1250A	1000~1250	3b.50×5	1b.50×10	3b.50×5	2b.50×10	3b.50×5	2b.50×10
1600A	1600	3b.50×5	2b.40×10	3b.50×5	2b.50×10	4b.50×5	2b.50×10

B

Installation dimensions of the frame-plastic integrated circuit breaker

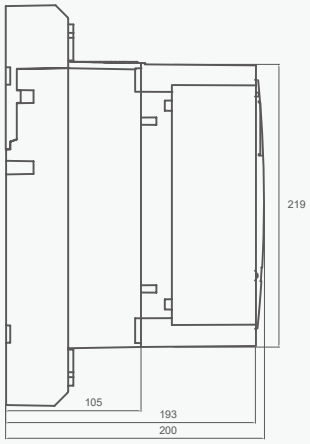

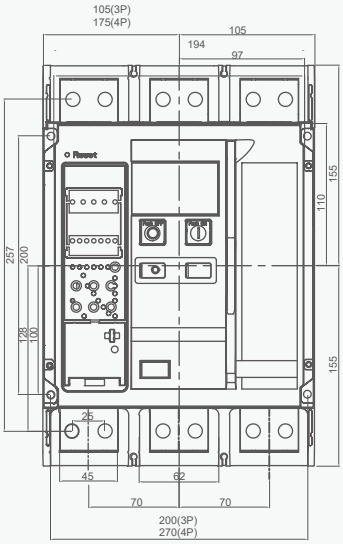

With mounting bracket

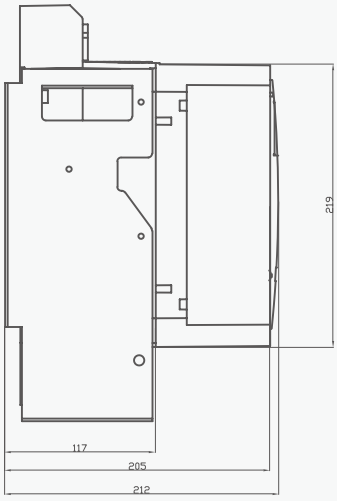

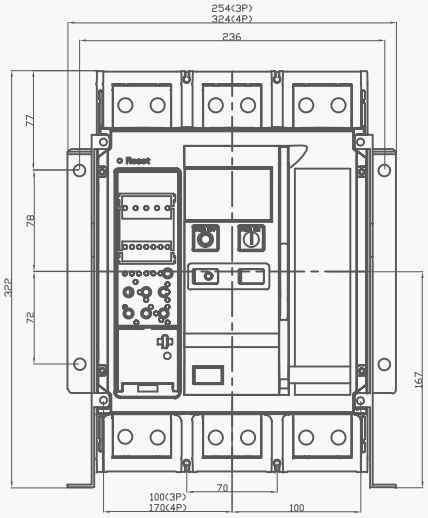

With mounting bracket

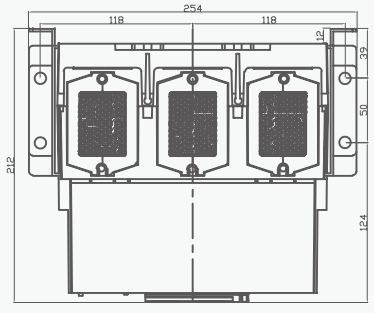

With mounting bracket

B

Installation dimensions of the frame-plastic integrated circuit breaker

Interlocking of two flat or stacked circuit breakers

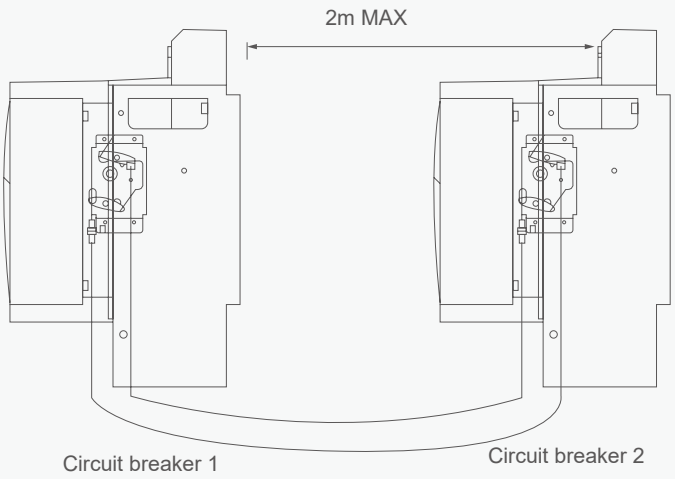

Circuit diagram

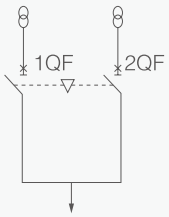

Possible modes of operation

1QF	2QF
0	0
0	1
1	0

Note: The cable length of interlocking steel cable is generally 2.5m, and 1.5m steel cable can also be provided, but the user needs to indicate when ordering.

Door frame size

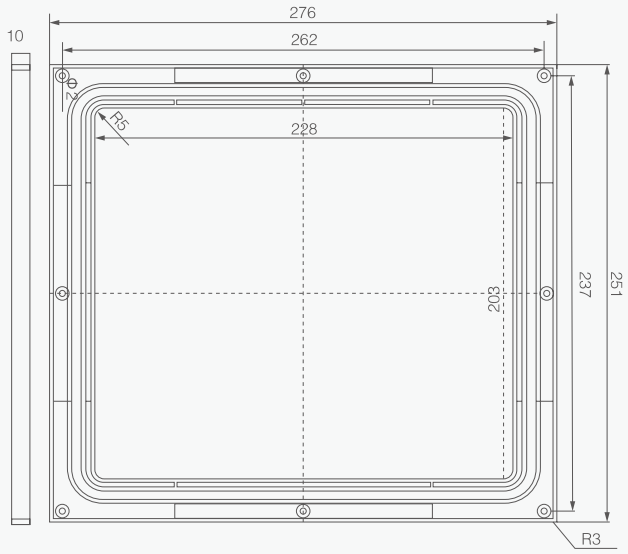

YCW9X Integrated Circuit Breaker

Installation dimensions of the frame-plastic integrated circuit breaker

Two bar interlocks for stacked circuit breakers

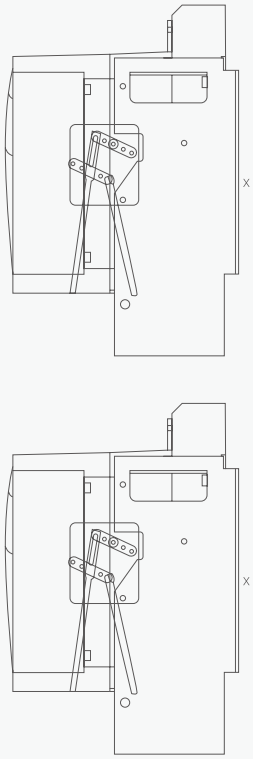

Circuit diagram

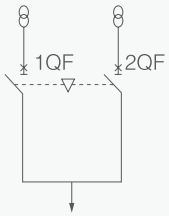

Possible modes of operation

1QF	2QF
0	0
0	1
1	0

“Break” locking device

The “off” lock device locks the off button of the circuit breaker in the pressed position, at which time the circuit breaker will not close.
After the user chooses the installation, the factory provides the lock and key; Three circuit breakers with three identical locks and two keys



When optional, the manufacturer will install the circuit breaker.

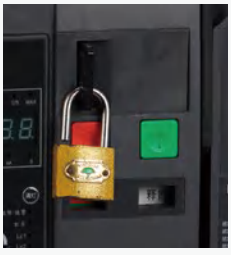

Optional (lock should be brought by the user)
When the lock is damaged, the user can replace it by himself.

YCW9X Integrated Circuit Breaker

B

Order specification					(Please make a √ in your
User unit		Number of units ordered		Order date /	
Type specification	YCW9X-1600	Number of poles	□ 3P □ 4P	Installation mode	□ Fixed □ Fixed (with mounting bracket)
Rated operating voltage	□ AC400V □ AC800V	Rated current In= A			
Intelligent controller	Type	□ M □ 3M □ 3H □ F(pressure reclosing)			
	Basic function	□ Overload long delay protection □ Short circuit instantaneous protection □ Fault memory function		□ Short circuit delay protection □ Grounding or leakage protection □ Test function	
	Co-option function	□ Ammeter function □ Communication function □ Area lock function		□ Thermal simulation function □ Load monitoring □ MCR function □ Self-diagnosis function	
	Grounding mode	□ 3PT □ 4PT □ (3P+N)T Need external transformer ★			
	Controller power supply	□ AC400V			
		□ AC230V			
Optional Accessories	Shunt release	□ AC400V □ AC230V			
	Closing electromagnet	□ AC400V □ AC230V			
	Electric operating mechanism	□ AC400V □ AC230V (include Shunt release and Closing electromagnet)			
	Auxiliary switch	□ Normal form □ 4 sets of conversion+47 bit terminal blocks			
	Undervoltage release	□ AC400V		□ Undervoltage transient trip device	
		□ AC230V		□ Undervoltage delay release □ 1s □ 2s □ 3s	
	Break position lock	□ One lock one key(manufacturer installed) □ Two locks and one key (manufacturer installed) □ Three locks two keys (manufacturer installed) □ One lock and one key(own) □ Two locks and one key(brought by oneself) □ Three locks two keys (self)			
	Mechanical interlocking	□ Steel cable interlock (two sets)		□ Lever interlock two switches	
	Other accessories	□ Expansion row		□ Other	

Note: If the customer has other special requirements, please negotiate with the manufacturer.

YCQ1Bs-63 Automatic Transfer Switch





General

The dual power automatic switch is used to switch between two power sources. It is divided into common power supply and standby power supply. When the common power supply is powered off, the standby power supply is used. When the common power supply is called, the common power supply is restored), if you do not need automatic switching in special circumstances, you can also set it to manual switching (this type of manual / automatic dual-use, arbitrary adjustment).

Type designation

Model		Frame current	Poles	Rated Current
YCQ1Bs	-	63	4P	63
YCQ1Bs		63	2P 3P 4P	10A , 16A , 20A , 32A , 40A , 50A , 63A

Technical data

Type	YCQ1Bs-63
Working frequency	50Hz/60Hz
Rated voltage	AC400V
Operating Voltage	AC220V
Standards compliant	IEC60947-6-1
Product Size	185mm×138mm×115mm
Operation method	Automatic and manual
ATS level	CB
Conversion time	≤2s
Current specifications	10A-63A
Conversion method	Self-return

YCQ1Bs-63 Automatic Transfer Switch

Product Overview

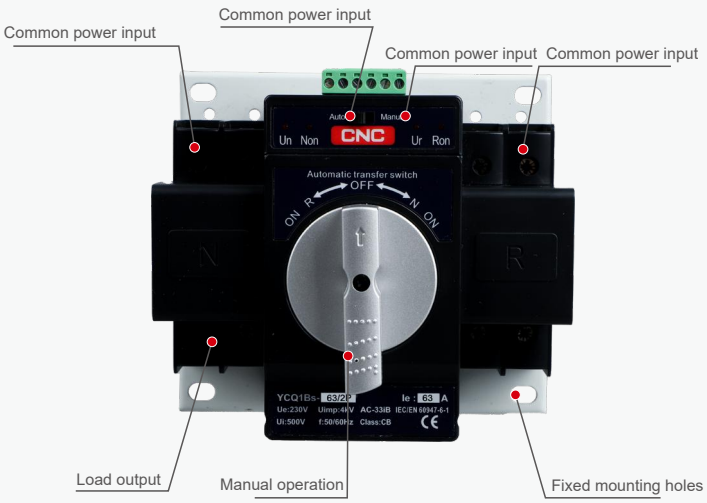

Overall and mounting dimensions(mm)

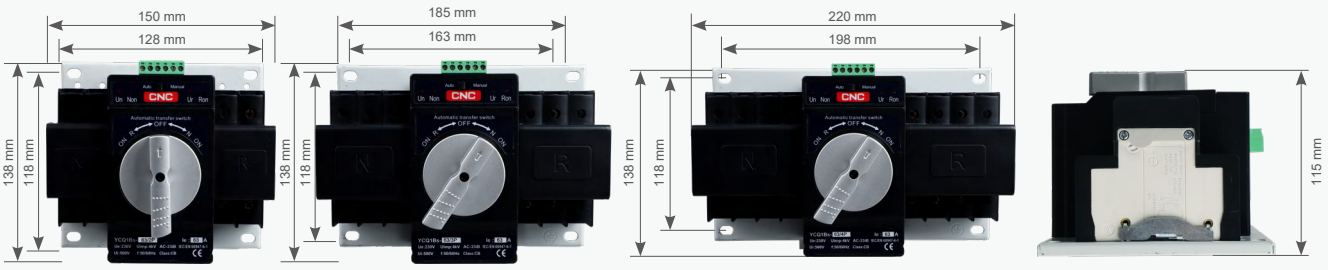

Wiring diagram

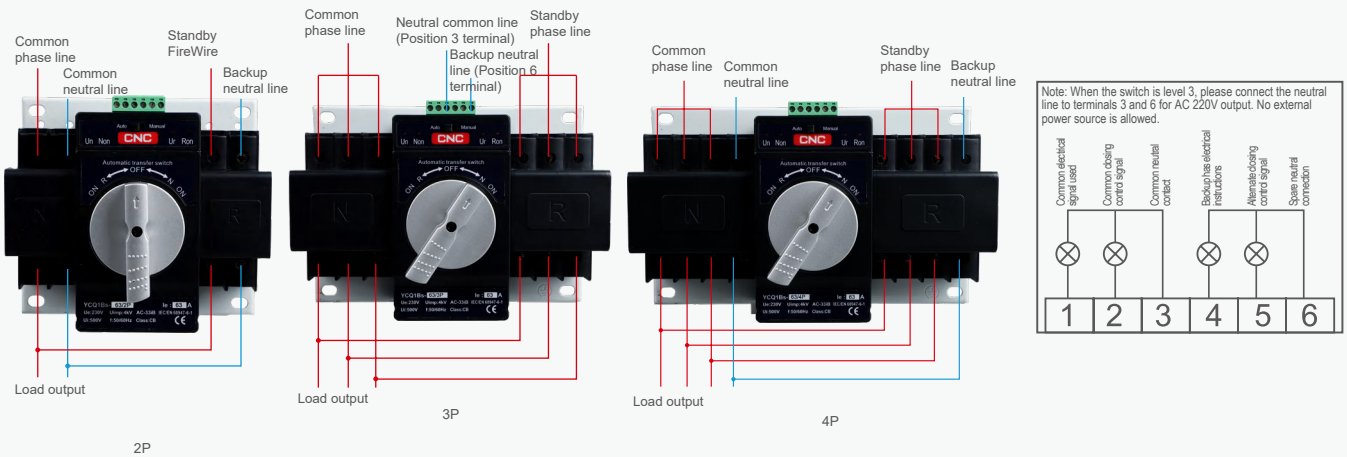

YCQ9B-63(CB Class) Automatic Transfer Switch



General

This series of Automatic transfer switch is suitable for AC 50Hz/60Hz, rated working voltage 230V/400V and below power distribution and control circuit.The current up to 63A. It is mainly used as the main switch of terminal electrical appliances, and can also be used to control various types of motors, low-power electrical appliances, lighting and other places.

Standard:IEC60947-6-1

B

Features

1. This product adopts modular design,the execution components,transmission mechanism,control circuit is completely independent. So it's easy to replace.
2. The intelligent Automatic transfer switch is composed of two parts, the controller and the main device, and has a simplified structure in which two sets of circuit breakers are assembled in a switch shell.
3. The mechanical interlocking device adopts gear drive,which completely eliminates the possibility of closing at the same time.
4. The appearance of product is small. Appearance patent product.
5. The control circuit layout of the controller adopts the separation of working voltage and sampling power supply from MCU control, which overcomes the electromagnetic interference from the hardware structure.
6. The product with complete functions,including starting generator, fire control, fire feedback signal, main power and emergency power closing passive signal output, three phase detection of main power and emergency power.
7. Modular design. Good interchangeability of components. Convenient installation.

Type designation

Model		Shell frame		Number of poles	Rated current
YCQ9B	-	63	/	2P	16A
Automatic transfer switch(CB class)		63(16~63A)		2:2P 3:3P 4:4P	16A 20A 25A 32A 40A 50A 63A

Technical data

Type	YCQ9B-63
Rated current(A)	6,10,16,20,25,32,40,50,63
Pole	2P,3P,4P
Rated working voltage(V)	Single phase 230
	Three phase 400
Rated insulation voltage Ui	500V
Rated impulse withstand voltage Uimp	4kV
Rated short-circuit making capacity Icm	7.5kA,Power-on time 0.1s
Rated making and breaking capacity Icn	5kA,1.05Ue,cosΦ=0.65
Mechanical life	10000 times
Electrical life	600 times
Transfer action time	≤5s
Undervoltage/Overvoltage action value	165/270±5V

YCQ9B-63(CB Class) Automatic Transfer Switch

Control panel description

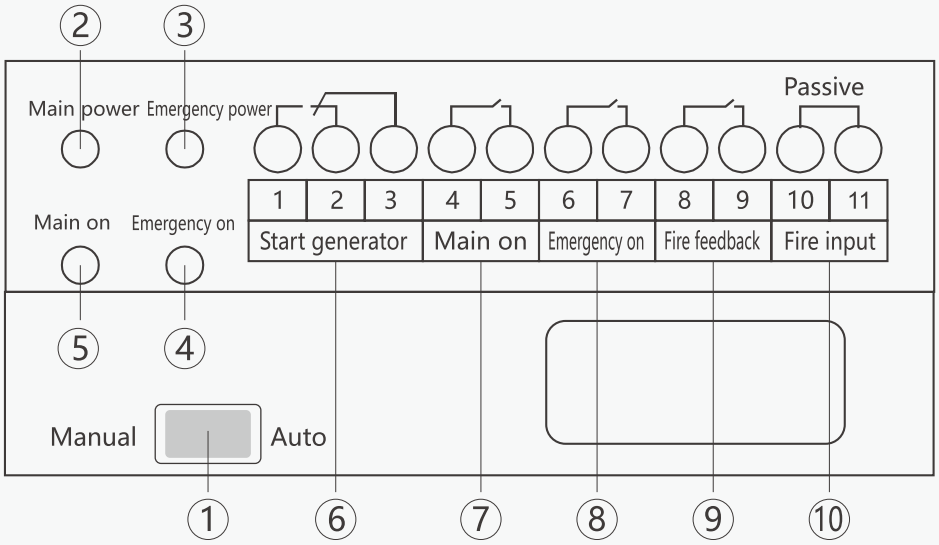

1. Auto/Manual mode control switch: When the control switch at the right position, it's in automatic mode, and when the control switch at the left position, it's in manual mode.
2. Mian power indicator: When the main power voltage is normal, this indicator on. It turns off when main power phase is missing, flashes rapidly at 10Hz when main power overvoltage, and flashes slowly at 2Hz when main power undervoltage.
3. Emergency power indicator: When the emergency power voltage is normal, this indicator on. It turns off when emergency power phase is missing, flashes rapidly at 10Hz when emergency power overvoltage, and flashes slowly at 2Hz when emergency power undervoltage.
4. Emergency on indicator: When the emergency circuit breaker is closed, this indicator on. Flashes slowly at 2Hz when the emergency circuit breaker trips.
5. Mian on indicator: When the main circuit breaker is closed, this indicator on. Flashes slowly at 2Hz when the main circuit breaker trips.
6. Terminal 1,2 and 3 is start generator output terminal: When the main power supply is normal, port 3 and 2 will turn off. And port 3 and 1 will turn on. When the main power supply abnormal, port 3 and 2 will turn on. And port 3 and 1 will turn off. It is recommended to connect normally closed contacts port 3 and port 2.
7. Terminal 4-5: Main power on state passive output port.
8. Terminal 6-7: Emergency power on state passive output port.
9. Terminal 8-9: Fire feedback: It is a passive output port. When the fire signal is connected and the product is powered off successfully, this port is closed.
10. Terminal 10-11Fire input: Passive input signal, short-circuit this port, switch transfer to power off position. And the main power on indicator light and the emergency power on indicator light flashes alternately. If you need to remove the fire status, you can manually flip the "manual/automatic" switch, and turn the switch to the "automatic" state after completion.

Notice:

If the Mian on or Emergency on indicator flashes. At this time, it is necessary to manually check and confirm that the load side is normal, and then toggle the Manual/Auto switch to release the fault signal, and in manual mode state rotate the operation handle to perform an opening and then closing operation.

YCQ9B-63(CB Class) Automatic Transfer Switch

Wiring diagram principle

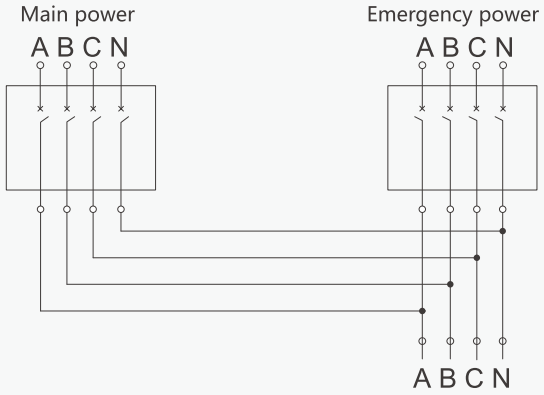

Overall and mounting dimensions(mm)

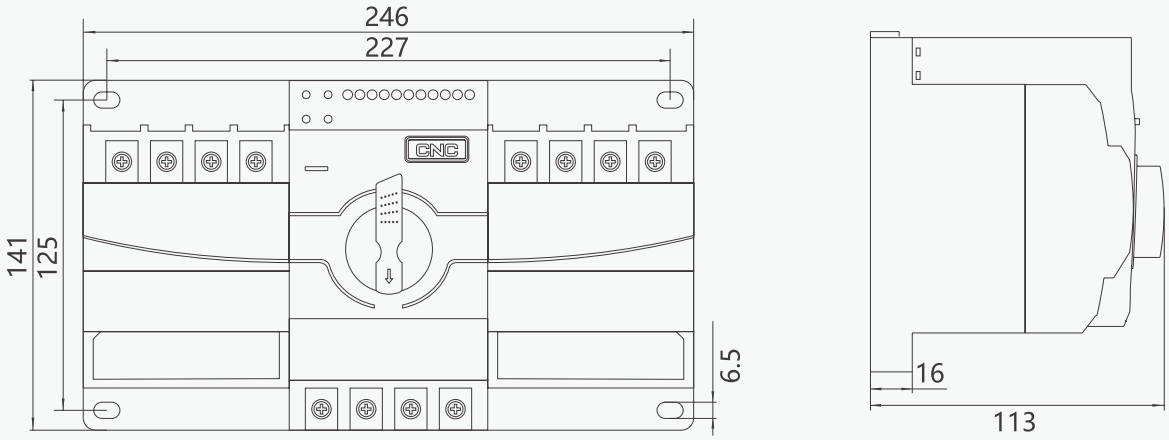

YCQ7B-63 Automatic Transfer Switch



General

YCQ7B-63 Automatic Transfer Switch (ATS) is applicable to three-phase four-wire dual-power supply grids with AC 50Hz, rated operational voltage AC 400V and rated operational current up to 63A. It can automatically transfer one or several load circuits from one power source to another to ensure the normal power supply of load circuits. This product is suitable for relatively important places such as industrial and commercial areas, high-rise and civil residential buildings.

Standards:IEC 60947-6-1

Type designation

YC Q7B - 63 / □□□

- Rated current (A): 10, 16, 20, 25, 32, 40, 50, 63
- Controller model: A; B; C; D
- Pole number: 3 – 3-pole; 4 – 4-pole
- Frame current
- Design serial number
- Company name

Operating Conditions

- Ambient air temperature: The upper limit of ambient air temperature is +40°C, the lower limit is -5°C, and the average temperature within 24 hours shall not exceed +35°C.
- Altitude: The altitude of the installation location shall not exceed 2000m.
- Atmospheric conditions: The relative humidity of the atmosphere shall not exceed 50% when the maximum ambient temperature is +40°C, and higher relative humidity is allowed at lower temperatures (e.g., up to 90% at +20°C). Special measures shall be taken against condensation occasionally caused by temperature changes.
- Pollution degree: Pollution degree is 2.
- Installation category: Installation category is IV.
- Installation inclination: The product is fixedly installed in the cabinet, with a maximum inclination of ±22.5°.

YCQ7B-63 Automatic Transfer Switch

Technical data

Product Model	YCQ7B-63
Compliance Standard	IEC 60947-6-1
Rated Operational Voltage (V)	AC 400V/50Hz
Rated Insulation Voltage (V)	500
Impulse Withstand Voltage (KV)	4
Pole Number	3P/4P
Utilization Category	AC-33iB
Contact Transfer Time (s)	0.45±50%
Transfer Action Time (s)	0.9±20% - 1.3±10% (Type B, C, D)
Return Time (s)	0.9±20% - 1.3±10% (Type B, C, D)
Power-off Time (s)	0.45±50%
Rated short-circuit making capacity 9.18kA	9.2kA
Rated making and breaking capacity	6kA
Electrical Class	CB Class
Protection Characteristics	Overload Protection/Short Circuit Protection
Installation Method	Vertical Fixed Installation
Wiring Method	Screw Wiring
Operation Mode	Automatic/Manual
EMC Environment	Environment B
Insulation Stripping Length Before Conductor Insertion into Terminal (mm)	11
Maximum Number of Conductors Allowed to Be Clamped	1
Protection Level	IP20
Screw Tightening Torque (N·m)	2.5
Screw Breaking Torque (N·m)	3
Delay Time Range (s)	Fixed (Type B, C); 0~30s Gear Adjustable (Type D)
Power Supply Voltage Deviation Range (V)	160±10%
Normal Operating Range	85%Ue~110%Ue
Special Requirements	Normal Installation Conditions
Isolation Applicability	Yes
Switch Position	Normal (I), Off (O), Standby (II)
Mechanical Life	10000 times
Electrical Life	3000 times

YCQ7B-63 Automatic Transfer Switch

Controller Functions

Controller Type		Type A	Type B	Type C	Type D
Controller Installation Method		Integrated Type			
Rated Operating Voltage		230V 50Hz/60Hz			
Automatic Operation	Automatic Operation	■	■	■	■
	Handle Operation	■	■	■	■
Monitoring	Monitoring Phase	Single-phase	Three-phase	Three-phase	Three-phase
	Monitoring Normal Undervoltage	Phase A	■	■	■
	Monitoring Normal Voltage Loss	Phase A	■	■	■
	Monitoring Normal Phase Loss	Phase A	■	■	■
	Monitoring Standby Undervoltage	Phase A	■	■	■
	Monitoring Standby Voltage Loss	Phase A	■	■	■
	Monitoring Standby Phase Loss	Phase A	■	■	■
	Generator Control	-	-	■	■
	Fire Signal Non-Essential Load Cutting	-	■	■	■
Transfer Mode	Auto-switch & Auto-recovery	■	■	■	■
	Mutual Standby	-	Customizable	Customizable	Customizable
	Auto-switch & Non-recovery	-	Customizable	Customizable	Customizable
Grid Connection	Grid-Grid	-	■	■	■
	Grid-Generator	-	-	■	■
Display	Display Mode	Indicator Light			
	Normal Power Supply Status	■	■	■	■
	Standby Power Supply Status	■	■	■	■
	Normal Power Supply On/Off	■	■	■	■
	Standby Power Supply On/Off	■	■	■	■
	Manual/Auto Mode	■	■	■	■
Parameter Setting	Transfer Delay (s)	-	Fixed Delay	Fixed Delay	Adjustable Delay
	Return Delay (s)	-	Fixed Delay	Fixed Delay	Adjustable Delay
Other Functions	Fire Linkage Position Feedback	-	-	■	■

Note: ■ indicates standard configuration; - indicates no such function

YCQ7B-63 Automatic Transfer Switch

Controller Interface Introduction

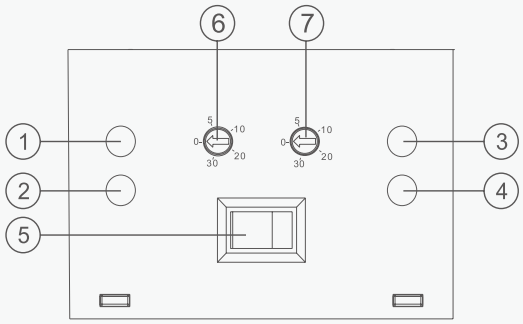

- Normal power supply indicator light;
- Normal closing indicator light;
- Standby power supply indicator light;
- Standby closing indicator light;
- Auto/Manual button (for products with fire linkage function,the linkage can be released by pressing this button after fire linkage execution).
- Coding switch for adjustable normal delay time;
- Coding switch for adjustable standby delay time;

Note: Items 6 and 7 are only available on Type D products with adjustable delay.

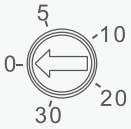

Coding Switch Introduction
The coding switch has 5 delay gears in total: 0, 5, 10, 20 and 30 respectively.
0 means no delay, and the other gears represent 5s, 10s, 20s and 30s respectively.

Wiring Diagrams

Main Circuit Wiring Diagram for 3-pole Products

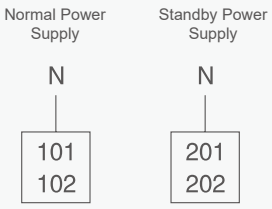

Neutral Wiring Terminal for 63-type 3-pole Products

Main Circuit Wiring Diagram for 4-pole Products

Main Circuit Wiring Diagram for 3-pole Products

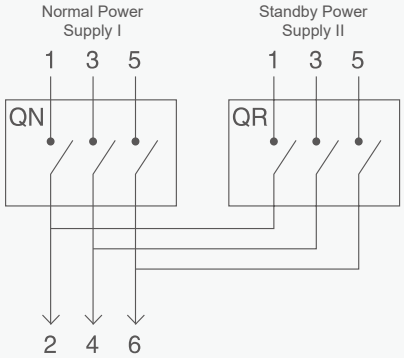

Main Circuit Wiring Diagram for 4-pole Products

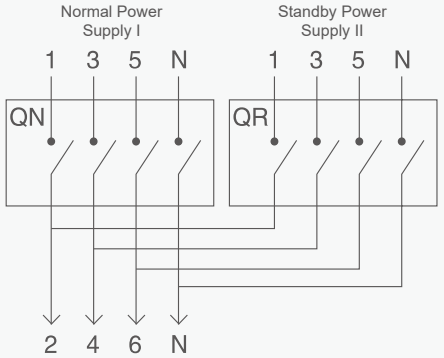

YCQ7B-63 Automatic Transfer Switch

B

Controller Secondary Wiring Diagram

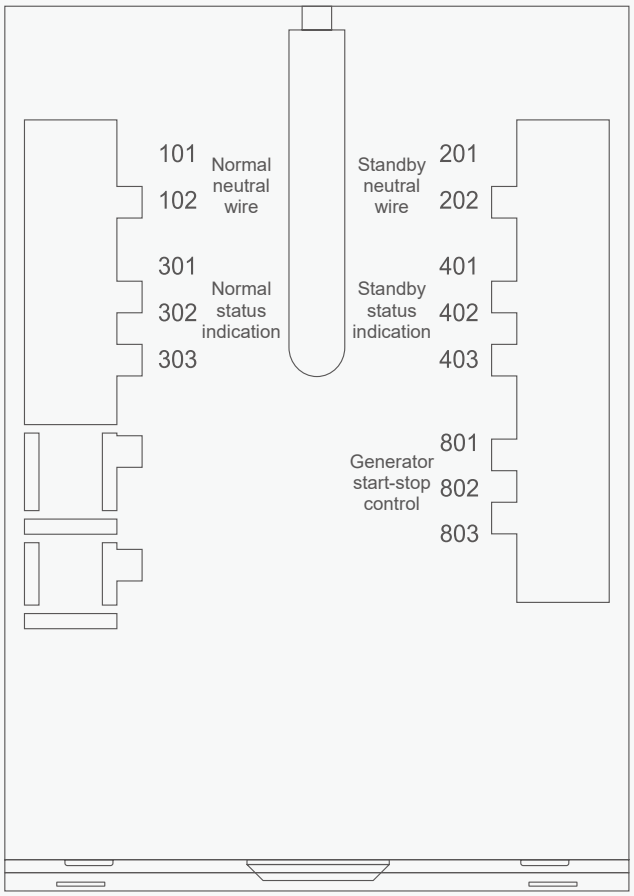

A Controllers

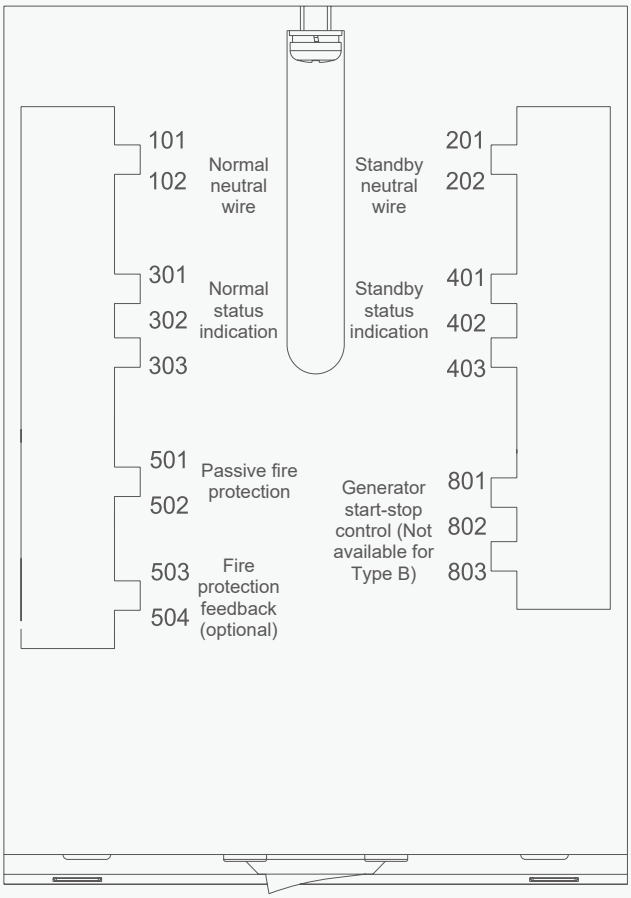

Type B, C, D Controllers

YCQ7B-63 Automatic Transfer Switch

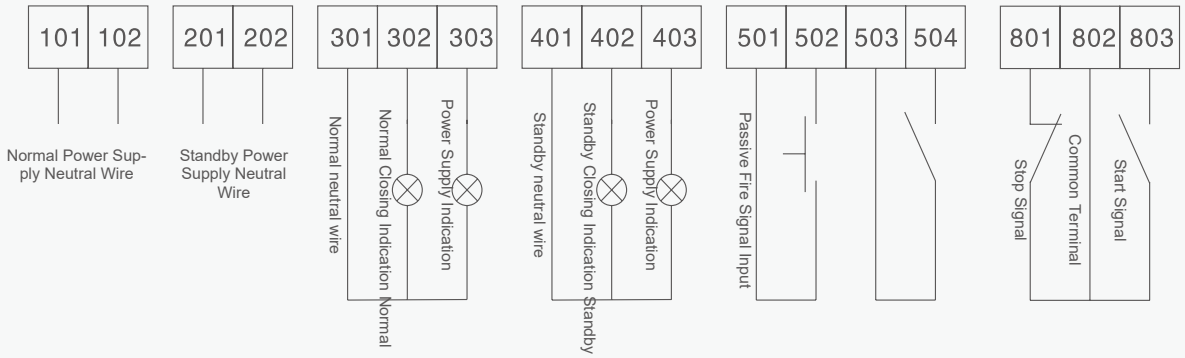

Neutral terminal for 3-pole products

Status indication of external signal terminals of the controller | Fire port | Signal port | Generator start-stop port

Port Wiring Explanation:

1. Terminals 101, 102, 201 and 202 are only to be connected for 3-pole products. Connect the normal neutral wire to 101 or 102 (or both simultaneously); connect the standby neutral wire to 201 or 202 (or both simultaneously). The 3-pole product will not work without the working neutral wire connected (no connection required for 4-pole products).
2. 501, 502 for Passive Fire Signal Input (Note: After fire linkage is activated, the control mode will be locked and needs to be unlocked by pressing the rocker switch Auto/Manual button).
3. 503, 504 for Optional Function: A set of dry contact signal output.
4. 801, 802, 803 for Generator Start-Stop Signal Output. 802 is the COM terminal, 803 is the generator start signal, and 801 is the generator stop signal.

Note: The functions related to terminals 501, 502, 503, 504 and 801, 802, 803 are only available when the “Intelligent Type” product is selected.

YCQ7B-63 Automatic Transfer Switch

B

Overall and mounting dimensions(mm)

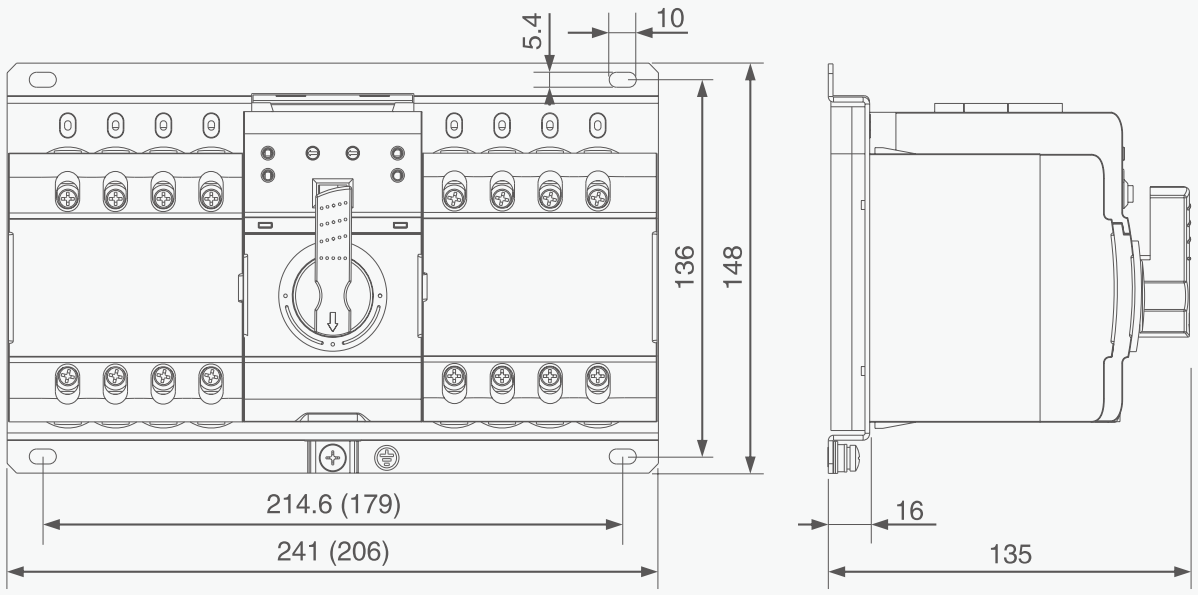

Note: Dimensions in parentheses are for 3-pole products

YCQ9Ms Automatic Transfer Switch



General

YCQ9Ms series dual power automatic transfer switch is suitable for power supply system with AC 50/60Hz, rated working voltage AC400V, rated working current 800A and below.

It is possible to select and switch between two power sources according to requirements, ensuring uninterrupted operation of key power sources. When one power supply has over-voltage, undervoltage or phase loss, it will automatically switch to another power supply or start the generator.

Built-in RS485 communication interface, communication protocol MODBUS-RTU, realize real-time data upload, remote data configuration and status monitoring, as well as remote control, telemetry, remote control and remote adjustment functions.

Mainly used in hospitals, shopping malls, banks, hotels, high-rise buildings, fire protection and other places that do not allow long-term power outages with uninterrupted power supply required.

Standard: IEC 60947-6-1

Operating Conditions

1. Can work in the environment of -5°C~40°C.
2. The altitude of the installation site does not exceed 2000m.
3. When the highest temperature is +40°C, the relative humidity of the air should not exceed 50%.
4. Higher humidity is allowed at lower temperature, 20°C~90%

Type designation

YCQ9Ms - 125 M 3 100A W2

Product name		Hell frame grade	Breaking capacity	Number of poles	Rated current	Controller code
YCQ9Ms	-	125	M	3	YCQ9Ms	YCQ9Ms
Dual power automatic transfer switch		63: (10-63A) 125: (16-125A) 250: (100-250A) 400: (250-400A) 630: (400-630A) 800: (630-800A)	Standard type	3:3P 4:4P	10,16,25,32,40,50,63, 80,100,125,140,160, 180,200,225,250,315, 400,500,630,800	Default: LED(Y) W2:Split LED display W3:Split LCD display

YCQ9Ms Automatic Transfer Switch

Technical data

Type	YCQ9Ms					
Serial number definition	63	125	250	400	630	800
Rated working current In(A)	10, 16, 20, 25, 32, 40, 50, 63	16, 20, 25, 32, 40, 50, 63, 80, 100, 125	100, 125, 140, 160, 180, 200, 225, 250	250, 315, 350,400	400, 500, 630	630, 800
Number of poles	3, 4					
Electrical class	Class CB					
Use category	AC33iB					
Rated working voltage Ue(V)	AC380, 400					
Rated insulation voltage Ui(V)	AC690					AC800
Rated impulse withstand voltage Uimp(KV)	8					
Rated short-circuit breaking capacity Icn(KA)	15	25	25	35	35	35
Electrical life	1000			1000	500	
Mechanical life	5000			3000	2500	
Rated working system	Uninterrupt working system					
Overvoltage transfer setpoint	AC230V-AC300V					
Undervoltage transfer setpoint	AC150V~AC210V					
Contact switch time	< 4s					
Disconnection delay	1s-240s continuously adjustable					
Shutdown delay	1s-240s continuously adjustable					



Serial number definition		
1. Handle		7. Alternative power input and power sampling line
2. Nameplate		8. Controller display
3. Main contact position indication	Normal power	9. Controller control button
	OFF-OFF	10. Fixed screw holes
	Alternative power	11. Alternative power load side
4. Trademark		12. Power indication, closing indication, fault indication output terminal
5. Normal power input and power sampling line		13. Normal power load side
6. Signal terminal: Fire voltage input, generator start signal output		14. Enclosure grounding terminal

YCQ9Ms Automatic Transfer Switch



Technical data

Function	Full-function type
Manual mode	■
Automatic mode	■
Motor protection function	■
Main contact working position(performing circuit reaker)	
Normal power supply closed	■
Reserve power supply closed	■
Double break	■
Automatic control	
Monitoring normal power supply	■
Monitoring reserve power supply	■
Self-throwing and self-reset	■
Self-throwing and non self-reset	■
Reserve for each other	■
Power grid-power grid	■
Power grid-power generation	■
Phase failure instantaneous protection	■
Under-voltage protection 150-210V	adjustable
Over-voltage protection 230-300V	adjustable
Fire control function	■
Changeover time delay 0-240s continuously adjustable	■
Returning time delay 0-240s continuously adjustable	■
Frequencyy display	■
Communication function	optional
Indication	■
N on/R on/double break indication	■
Normal power supply indication	■
Reserve power supply indication	■
Fault tripping indication	■
Parameter setting indication	■
Voltage real time indication	■
Normal three phase voltage protection	three phase
Reserve three phase voltage protection	three phase

YCQ9Ms Automatic Transfer Switch

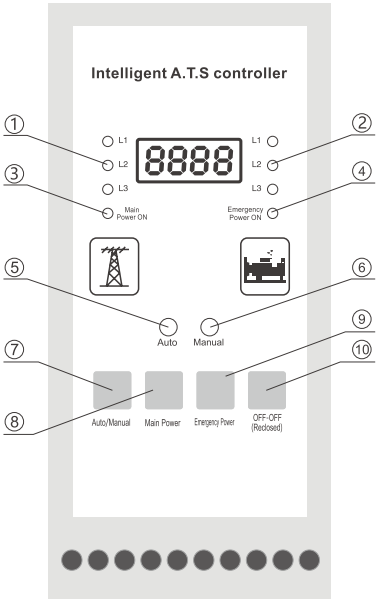

Y type controller panel instruction

1. Normal power L1, L2, L3 phase power indicator
2. Aleternative power L1, L2, L3 phase power indicator
3. Indicator light for normal power on.
4. Indicator light for alternative power on.
5. Indicator light for automatic working status.
6. Indicator light for manual working status
7. Automatic/Manual button
8. Main power
9. Emergency power
10. OFF-OFF(reclosed) button

Controller

Automatic transfer switch according power supply condition and the parameter that user set to choose if transfer from one power to the other power. It's function depends on the controller. There are 3 types(Y, w2 and w3) of controller. The features and functionality of controller as following.



W2
(CONTROLLER)



W3
(CONTROLLER)

YCQ9Ms Automatic Transfer Switch

Technical data

Controller	Y type Controller	Y+W2 type Controller	Y+W3 type Controller
Working power supply	AC160-250V 50/60Hz	DC12V (Provided by the in side OF y TYPE CONTROLLER)	
Installation	Integral type	Split type	
Position	3 Positions		
Mode of operation	Auto, manual and electro-manual operation		
Voltage monitoring function	3 phase over-voltage, under-voltage and phase loss monitoring		
Frequencyy monitoring function	Frequencyy monitoring		
Generator control	A set of 3A relay dry contact		
Fire linkage control	Passive contact input, with a set of normally open passive signal feedback contact		
Mode of conversion	According to users requirement could set at A uto Can set at Auto transfer and auto recover,Auto transfer and non-auto recovery or utility generator type mode according to user's requirement.		
Display	LED display		LCD display
Conversion time delay	0.5s-60s continuously adjustable		
Return time delay	0.5s-60s continuously adjustable		

Model	Match circuit breaker	Pole	Rated short circuit making capacity(Icm)	Rated short circuit breaking capacity(Icn)	Rated current of circuit breaker (A)	Rated insulation voltage(V)
YCQ9Ms-63	YCM1-63	3	31.5	15	10, 16, 20, 32, 40, 50, 63	690
		4	31.5	15		
YCQ9Ms-125	YCM1-125	3	52.5	25	16, 20, 32, 40 ,50, 63, 80, 100, 125	690
		4	52.5	25		
YCQ9Ms-250	YCM1-250	3	52.5	25	125, 160, 180, 200, 225, 250	690
		4	52.5	25		
YCQ9Ms-400	YCM1-400	3	73.5	35	250, 315, 350, 400	690
		4	73.5	35		
YCQ9Ms-630	YCM1-630	3	73.5	35	500, 630	LCD display
		4	73.5	35		
YCQ9Ms-800	YCM1-800	3	73.5	35	700, 800	800
		4	73.5	35		

YCQ9Ms Automatic Transfer Switch

B

installation and wiring

Switching device installation: After fixing the switching device, according to the rated current to choose the appropriate wires to wire.
Note: The phase sequence of main power and emergency power must be consistent.

Split type controller installation:

Use 2 strutting pieces to fix the split type controller on the panel.
Please check if the controller has been plugged into switching device and fastening screw.
Please check whether each electric contact part is reliable and the fuse if good.
If user wants to withstand voltage test, please remove the controller first. Otherwise the controller will be broken down.
For the 3 pole switch, user needs to connect main power neutral line to terminal N1 port.
Connect emergency power neutral line to terminal N2 port. Neutral line must be reliable and don't connect wrong so that ATS could proper work.
For the 4 pole switch, main and emergency power neutral line must be connected to the corresponding circuit breaker N pole.
In addition, switching device should ground connection at the grounding mark.
User could connect indicator light to the terminal for observation. Refer to the wiring diagram below.

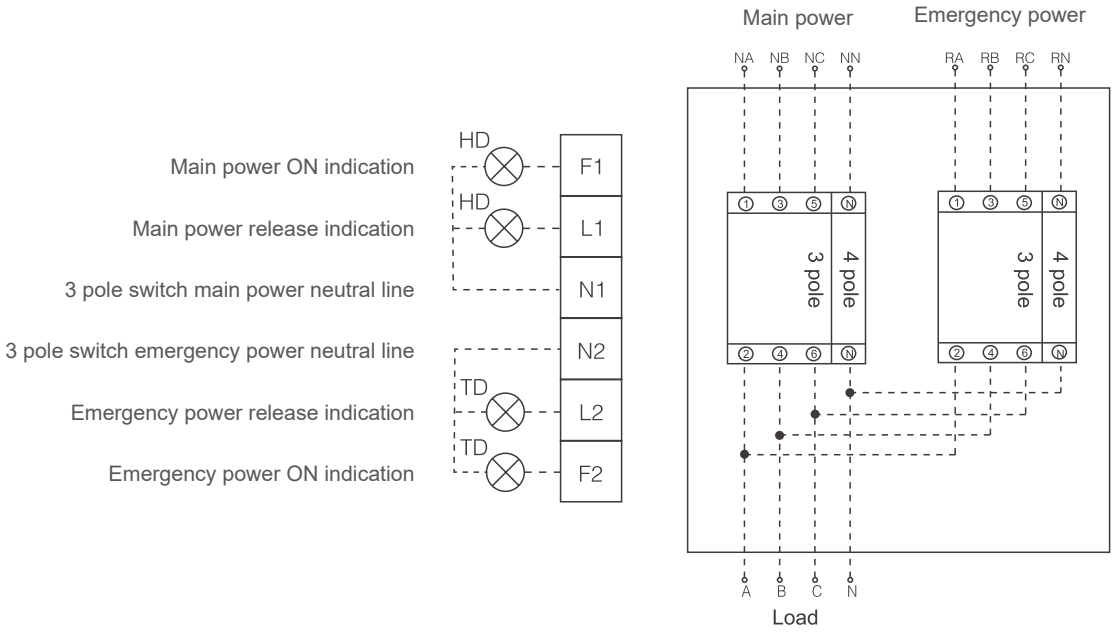

Note:

This diagram applies to three-phase four-wire. When using three-phase three-wire system, the neutral line of main power connects to terminal N1 port,neutral line of emergency power connects to terminal N2 port.
HD main power indication AC220V(User-provided).
TD main power indication AC220V(User-provided).

YCQ9Ms Automatic Transfer Switch

Overall and mounting dimensions(mm)

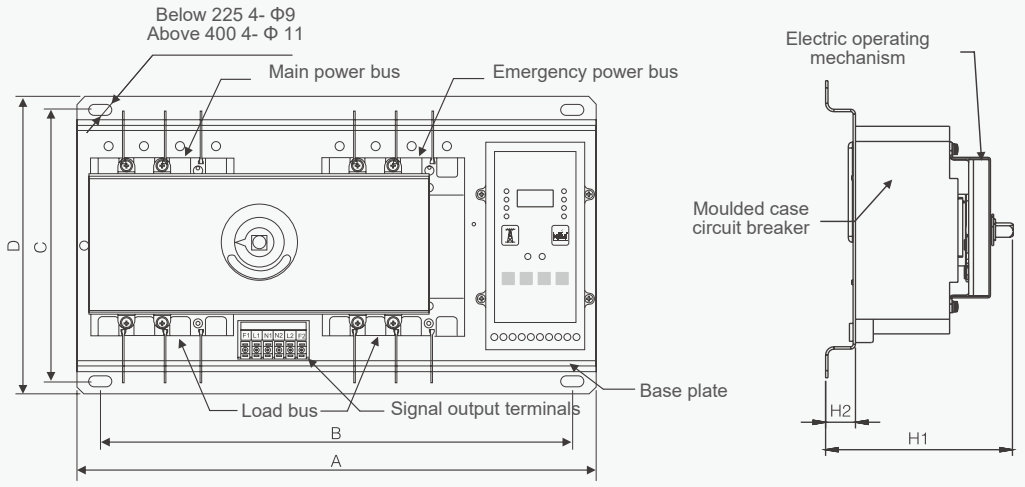

Model	A		D	A		C	H1	H2
	3P	4P		3P	4P			
YCQ9Ms-63	380	405	250	340	365	230	<160	25
YCQ9Ms-125	405	435	250	365	395	230	<170	25
YCQ9Ms-250	450	480	250	410	440	230	<190	25
YCQ9Ms-400	570	620	330	510	560	300	<200	25
YCQ9Ms-630	680	740	330	620	680	300	<250	25
YCQ9Ms-800	750	820	330	690	760	300	<250	25

YCQ2 Automatic Transfer Switch



General

YCQ2 series automatic transfer switch is mostly used to monitor the power supply circuits. When main power failure, it will change over to backup power by automatically, thus completing the transformation of power system . At present, in particular suited for the important electricity power places where disallow to failure, in order to meet the needs of the scene. Automatic switch has self-input and selfrecover, self-input without self-recover, utility to utility, utility-generators work with variety functions, the product applied in 220V,AC 50Hz,rated current from 10A to 1250A (CB class) automatically switch products.

General

YCQ 2 C D 100 - 63 / 3 R

- R=Auto transfer and auto retransfer (network..network)
  S=Auto transfer and non-auto retransfer (network..network)
  F=Network..generator
- Poles: 2P,3P,4P
- Circuit breaker rated interruption current
- Frame class
- Chosen controller
  A: (Standard type) only supplied with self transfer/ retransfer(for integral type ATS)
  B: (Intelligent type) display source voltages, start generators, fire protection actuation (for integral type ATS)
  C: (Intelligent type) same functions as type B controller, (for split type ATS)
  D: (Intelligent type) same function as type B controller, with liquid crystal Chinese language display (for split type ATS)
- Circuit breaker type:
  C--Chinese make circuit breaker (CM1, C45)
- Design No .
  1--mini circuit breaker
  2--Moulded case circuit breaker
- CNC

YCQ2 Automatic Transfer Switch

Features

YCQ2 Series intelligent dual power automatic switches is made up of two units in 3 pole and 4 pole of MCCB and(auxiliary contact, alarm contact),the mechanical interlocking transmission, intelligent controller and other components. It has the integral style and split type with two kinds mechanism. Integral controller is equipped with a base and executing agencies ; Split type is intelligent controller install ed in the panel User take the base by implementing agencies to install into the cabinet controller with about 2m cables.

1. Reliable mechanical interlock between the two circuit breakers and electrical interlock device. Eeliminate the two devices closing completely at the same time.
2. SCM intelligent controller used to control the core hardware is simple and powerful, expansion of convenience, high reliability.
3. It has a short circuit, over load protection functions, over voltage, under voltage, loss phase automatic transfer function and intelligent alarm function.
4. Automatic switching external parameters can be set free.
5. Operation of Intelligent motor protection
6. The control circuit devices with fire, fire control center to a control signal into intelligent controller. Two sets circuit breaker will enter a stating of breaking .
7. There is a computer network interface for achieving remote control four remote telemetry functions

Technical data

Model	YCQ2-100/225	YCQ2-400	YCQ2-630/800/1250
Mechanical life	5000	3000	2500
Electric life	1000	1000	500
Rated working system	Uninterrupted working system		
Over voltage transfer adjustive value	270VAC		
Set the adjustive range of under voltage	(70%~85%)Ue Adjustable Continuously		
Transfer time of contact	< 4s		
Open-transition delay time t1	0.5~30s Adjustable Continuously		
Open-transition delay time t2	0.5~30s Adjustable Continuously		

Model	Match circuit breaker	Pole	Capacity of circuit breaker disjunction Icu(kA)	Rated current of circuit breaker (A)	Rated working voltage of circuit breaker (V)	Rated Insulation voltage(V)
YCQ2-63	YCM1-63	3 Poles	50	10, 16, 20, 32, 40, 50, 63	AC 380(400)	500
		4 Poles	50			
YCQ2-100	YCM1-100	3 Poles	50	16, 20, 32, 40, 50, 63, 80 ,100	AC 380(400)	690
		4 Poles	50			
YCQ2-225	YCM1-225	3 Poles	50	125, 160, 180, 200, 225	AC 380(400)	690
		4 Poles	50			
YCQ2-400	YCM1-400	3 Poles	65	250, 315, 350, 400	AC 380(400)	690
		4 Poles	65			
YCQ2-630	YCM1-630	3 Poles	65	500, 630	AC 380(400)	690
		4 Poles	65			
YCQ2-800	YCM1-800	3 Poles	75	700, 800	AC 380(400)	690
		4 Poles	75			
YCQ2-1250	YCM1-1250	3 Poles	85	1000, 1250	AC 380(400)	690
		4 Poles	85			

YCQ2 Automatic Transfer Switch

Overall and mounting dimensions(mm)

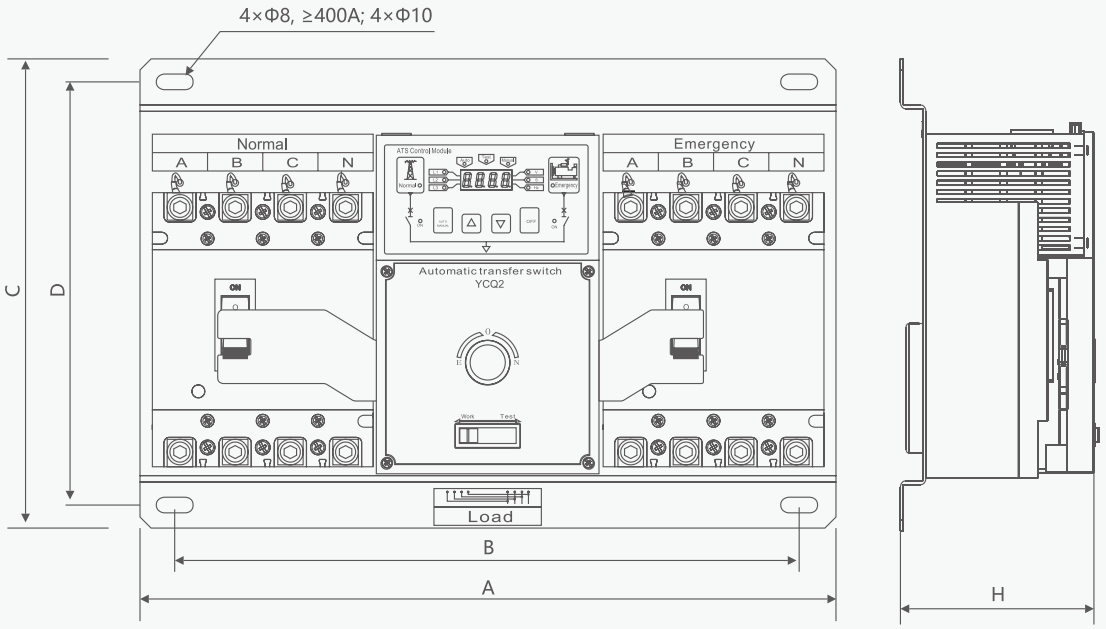

ATS switch body dimensions

Dimensions / Specification	A		B		C	D	H
	3P	4P	3P	4P			
20A	305	355	265	315	255	230	141
40A	305	355	265	315	255	230	141
63A	305	355	265	315	255	230	141
80A	335	395	295	355	256	230	141
100A	335	395	295	355	256	230	141
125A	335	395	295	355	256	230	141
160A	365	435	325	395	255	230	155
225A	365	435	325	395	255	230	155
250A	365	435	325	395	255	230	155
400A	491	587	431	527	330	300	215
630A	524	640	464	580	330	300	215
800A	580	720	520	660	340	310	215
1000A	580	720	520	660	415	385	290
1250A	580	720	520	660	415	385	290
1600A	580	720	520	660	415	385	290

YCQ9 Automatic Transfer Switch



General

YCQ9 series automatic transfer switch is suitable for AC 50Hz, rated working voltage AC400V, rated operating current up to 800A three-phase four-wire dual-circuit power supply grid, automatically connect one or several load circuits from one power supply to another to ensure load normal power supply of the circuit. This product is suitable for industrial, commercial, high-rise and residential buildings, etc.more important places.

Standard: IEC 60947-6

Features

1. Full range of dual-input single-output(up in and down out),convenient wiring and cost-saving.
2. Handle front operation for convenience and labor-saving.
3. Compact size for space saving.
4. Two controllers to meet different user needs.
5. Low main circuit impedance and energy consumption.
6. Reliable double interlock protection function.
7. Instantaneous structural design, cleverly driven by dual springs, with a simple and stable structure.
8. Rotary contact structure, circular arc extinguishing device design, good arc extinguishing performance, and long contact working life.

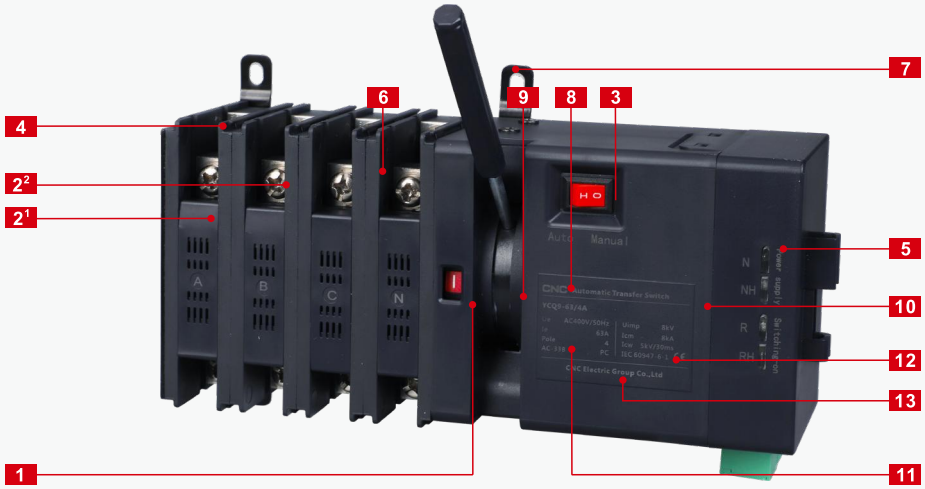

1. Conversion position indication window
2. 2^1. Terminal on the normal supply side
3. 2^2. Terminal on the alternative supply side
4. Manual/automatic operation button
5. Mounting hole
6. Indicator
7. Phase partition
8. Operating handle
9. Company trademark
10. Operating handle hole
11. Model
12. Technical data

- Control voltage: switch control voltage level is 230V
- Position indication: Indicates the position of the switch working state (I, O, II)
- Main body of the switch: the front part is the I road, which is connected to the "normal power supply"; the rear part is the II road, which is connected to the “standby power supply”

YCQ9 Automatic Transfer Switch

B

Type designation

Model		Shell frame		Number of poles	Controller type	Rated current
YCQ9	-	63	/	3	A	16A
Automatic transfer switch(PC class)		63(16~63A) 80(63~80A) 125(50~125A) 160(100~160A) 250(125~250A) 400(250~400A) 630(250~630A) 800(630~800A)		2: 2P (Only below 250A) 3:3P 4:4P	A:Economy B:Standard C:Functional Type	16A 20A 25A 32A 40A 50A 63A 80A 100A 125A 160A 200A 225A 250A 315A 350A 400A 500A 630A 700A 800A

YCQ9 Automatic Transfer Switch

Technical data

Model	YCQ9-63	YCQ9-80	YCQ9-125	YCQ9-160	YCQ9-250	YCQ9-400	YCQ9-630	YCQ9-800
Rated current(A)	16, 20, 25, 32, 40, 50, 63	63, 80	63, 80, 100, 125	100, 125, 160	125, 160, 180, 200, 225, 250	250, 315, 350, 400	400, 500, 630	630, 700, 800
Standard	IEC 60947-6							
Rated working voltage(V)	AC-230/50Hz(2P) AC-400/50Hz(4P)							
Rated insulation voltage	800V					1000V		
Impulse withstand voltage	8kV					12kV		
Icw(kA)	5/30ms		10/30ms			18/30ms		25/1s
Icm(kA)	8kA		17kA			35kA		52.5kA
Use category	AC-33iB	AC-32B	AC-33iB	AC-32B	AC-33iB	AC-32B		
Items	Parameters							
Number of poles	2P/3P/4P							
Contact transfer time(S)	0.6±20%							
Transfer action time (S)	1.3±10%							
Return time (S)	1.3±10%							
Power off time (S)	0.6±20%							
Electrical level	PC class							
Installation and connection	Vertical fixed installation							
Wiring method	Screw wiring							
Connection method	Front panel							
Operating method	Auto/Manual							
EMC environment	Environment B							
The maximum number of conductors allowed to be clamped	1					2		
Protection degree	IP20 (Except for the main circuit wiring terminal)							
Screw tightening torque	3				10	15		22
Screw breaking torque	3				10	15		26
Power supply voltage deviation range	160 ± 10% (Economy, Standard) also with edge dyeing							
Normal working range	85%Ue~110%Ue							
Special requirements	None (Normal installation conditions)							
Whether the product is suitable for isolation	Yes							
Switch position	Normal (I), Power Off (O), Standby (II)							
Mechanical life	8000(*)					4000(*)		3000(*)
Electrical life	2000(*)					1000(*)		1000(*)

YCQ9 Automatic Transfer Switch

Parameters of controller

Type	Type A	Type B	Type C
Power supply and opening/closing indication	■	■	■
Automatically transfer and restore operation	■	■	■
Grid-grid	■	■	■
Grid-generator(start/stop)	-	■	■
Three-phase monitoring commonly used to detect phase loss in power supply	■	■	■
Three-phase monitoring commonly used to detect power loss in power supply	■	■	■
Single-phase monitoring commonly used to detect phase loss in power supply	■	■	■
Single-phase monitoring commonly used to detect power loss in power supply	■	■	■
Handle manual operation	■	■	■
External wiring terminal of indicator light	■	■	■
Fire control linkage(24VDC)	-	■	-
Fire feedback	-	■	■
Delay conversion	-	-	Fixed delay

Note: For shell frames 63 and 80, only Type A controller is available, configured for normally used single-phase and backup single-phase detection.

Overall and mounting dimensions

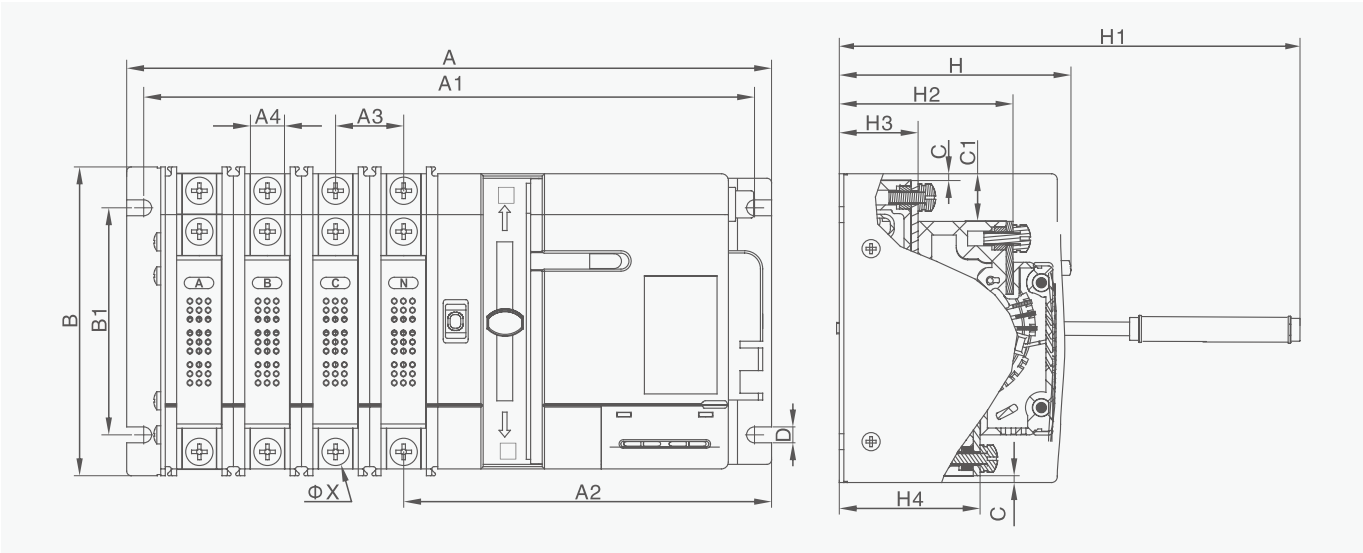

Specifications	A			B	H	A1			B1	A1	A2	A4	H1	H2	H3	H4	C	C1	D	ΦX
	2P	3P	4P			2P	3P	4P												
YCQ9 -63	171	193	215	138	68	44	66	88	106	136	22	13	152	52	24	43	2	13	5.2	6
YCQ9 -80	171	193	215	138	68	44	66	88	106	136	22	13	152	52	24	43	2	13	5.2	6
YCQ9 -125	228	259	290	136	102	212	243	274	100	164	30	15	240	76	35	62	5	21	7	6
YCQ9 -160	228	259	290	136	102	212	243	274	100	164	30	15	240	76	35	62	5	21	7	6
YCQ9 -250	298	344	390	170	125	282	328	374	125	210	45	25	257	92	44	79	4	22	8.7	8
YCQ9 -400	357	410	463	212	158	344	397	450	156	258	53	40	333	119	53	97	5	33	10	10
YCQ9 -630	357	410	463	212	158	344	397	450	156	258	53	40	333	119	53	97	5	33	10	10
YCQ9 -800	460	528	596	255	192	433	501	569	188	325	68	49	367	144	65	118	6	40	13	12

Note:The operating handle is usually removed and used for emergency or manual operation.

YCQ9 Automatic Transfer Switch

Controller

Interface of the display module of controller

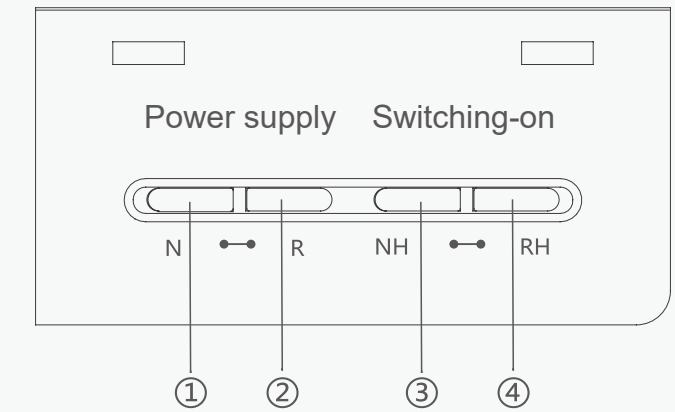

① N:Normal power indication

② R:Standby power indication

③ NH:Normal switch on indication

④ RH:Standby switch on indication

Controller action flow

Secondary wiring diagram of economy and basic controllers

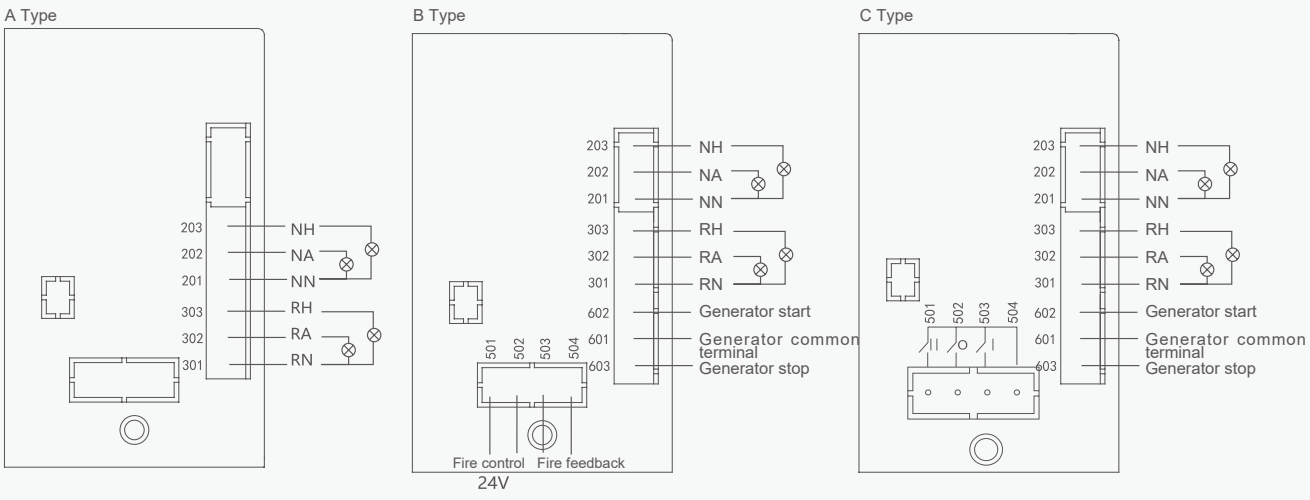

NH:Normal switch on indication
NA: A-phase of normal power indication
NN:Neutral wire of Normal

Fire feedback: Type C Configuration
RH:Standby switch on indication
RA:A-phase of standby power indication
RN:Neutral wire of Standby

YCQ9 Automatic Transfer Switch

Wiring diagram

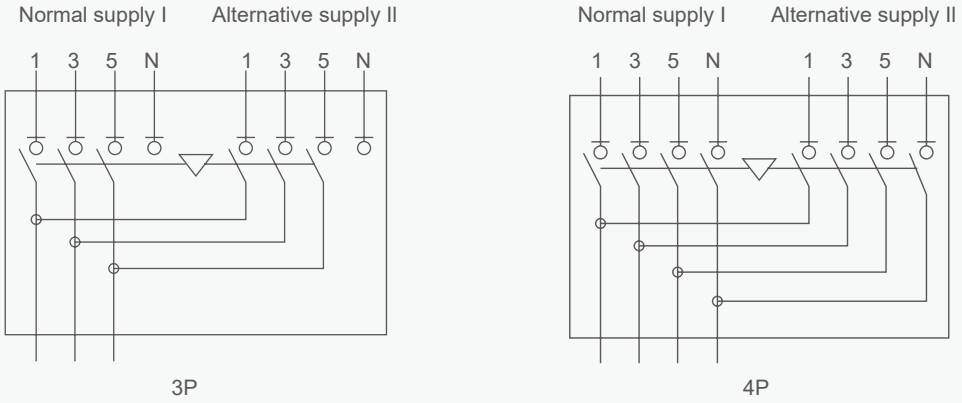

Note: Three-pole products must have the neutral wire connected to the controller(Normal neutral wire access 101)(Standby neutral wire access 201)

Controller action flow

Automatically transfer and restore operation
(power grid-power grid) work flow diagram of controller

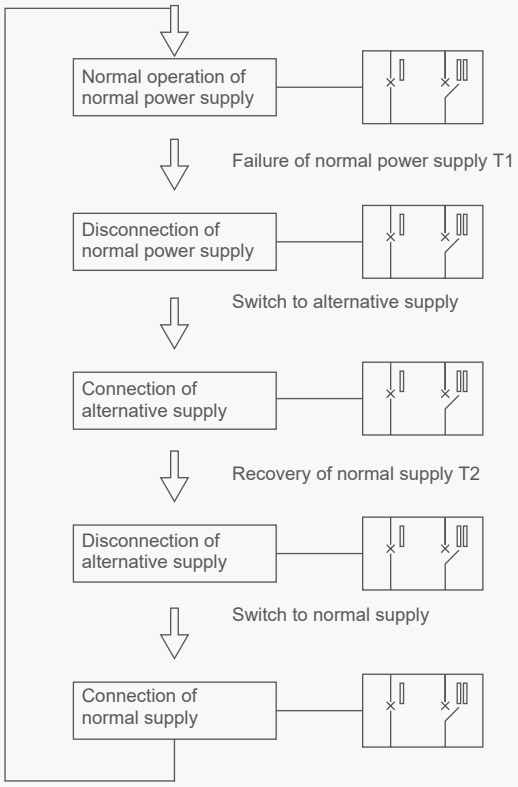

Automatically transfer and restore operation
(power grid-generator) work flow diagram of controller

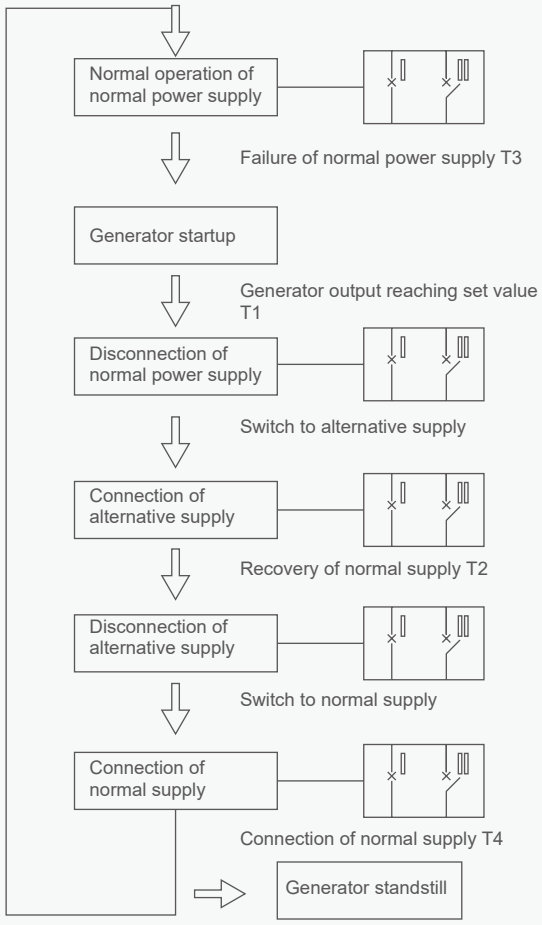

YCQ9E Automatic Transfer Switch



General

YCQ9E series automatic transfer switch, rated working current 16A to 630A,to be used in power systems for ensuring the continuity of the supply, by transferring a load between two power supply sources. The switch has three working positions of "Main (I) closing", "Standby (II) closing" and "Double-of (0)", which can be used for fire-fighting linkage and infrequent connection and disconnection of power supply systems. Mainly used in hospitals, shopping malls, banks, chemical industry, metallurgy, high-rise buildings, military facilities and fire-fighting occasions where power failure is not allowed.

Standards: IEC 60947-6-1

Type designation

YC Q 9 E - 125 / 3 □ □

Enterprise code	Product code	Design number	/	
YC	Q	9	E	-
CNC	PC Class Automatic Transfer Switch	/	LCD type	

Frame size current		Pole	Function code	Rated current
125	/	3	□	□
125, 250, 630		3P; 4P	A:Without RS485 B:With RS485	16~630A

Function

1. Source I/II over/under-voltage monitoring.
2. Source I/II over/under frequency monitoring.
3. Source I/II power ON running status LED indication.
4. When the switch is working normally, the LCD displays the switch information. When inquiring/adjusting the parameters, it displays the parameter settings; before transfer operation, transfer delay timer is displayed in a countdown mode.
5. Fire-fighting inkage function: The controller has a set of passive fire-fighting signal input terminals, which can accept external passive fire-fighting signals, and transfer to double of position, also has a set of passive feedback signal output terminals, which can return the switch's in-position signal to the firefighting equipment.
6. Generator control function: The controller has a set of relay dry contacts to control the start and stop of the generator, and can set the start delay and stop delay of the generator (need to be connected to the auxiliary power supply DC24V).
7. Communication function: Confgure RS485 communication port, Modbus-RTU communication protocol, which can realize remote signaling, remote measurement, remote control, and remote adjustment (D-type controller).

YCQ9E Automatic Transfer Switch

B

Operating conditions

1. Ambient temperature:-5°C~+40°C, average temperature within 24h does not exceed +35°C.
2. Humidity. When the highest temperature is +40°C, the relative humidity in the air does not exceed 50%, higher relative humidity is allowed at lower temperatures, for example, up to 90% at +25°C. Special measures should be taken for the occasional condensation due to temperature changes.
3. Installation altitude: The altitude of the installation site does not exceed 2000m.
4. Pollution degree: Pollution degree is level 3.
5. EMC electromagnetic compatibility: Class B (public).

Note: If the usage environment does not meet the above conditions, it should be explained to the manufacturer.

Structure introduction

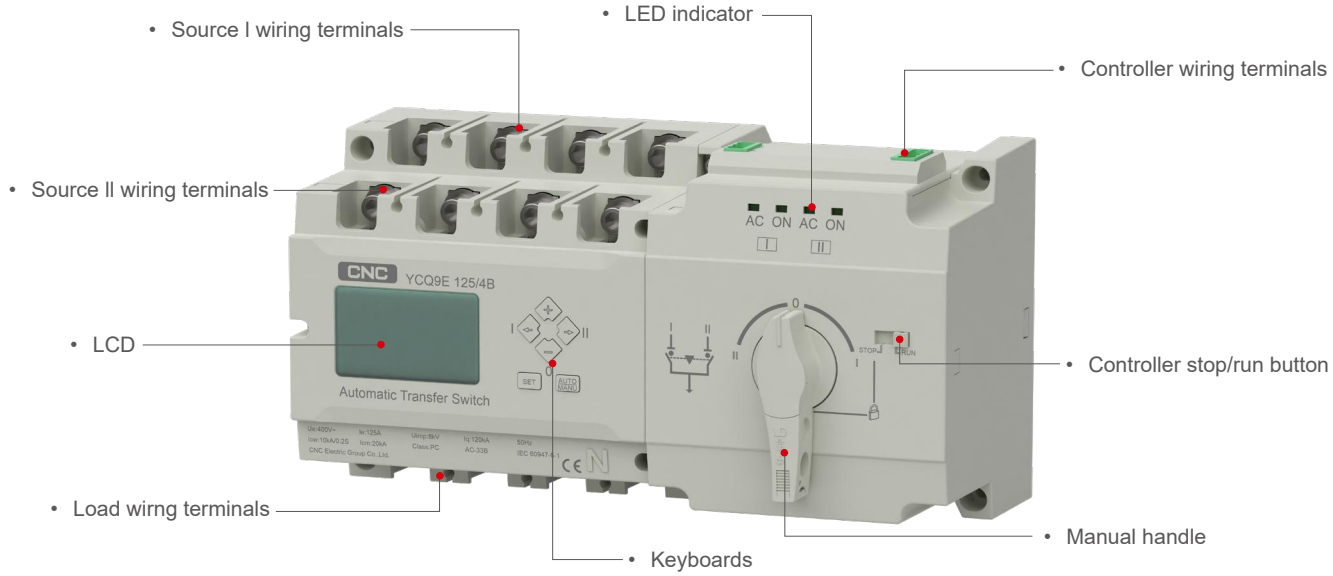

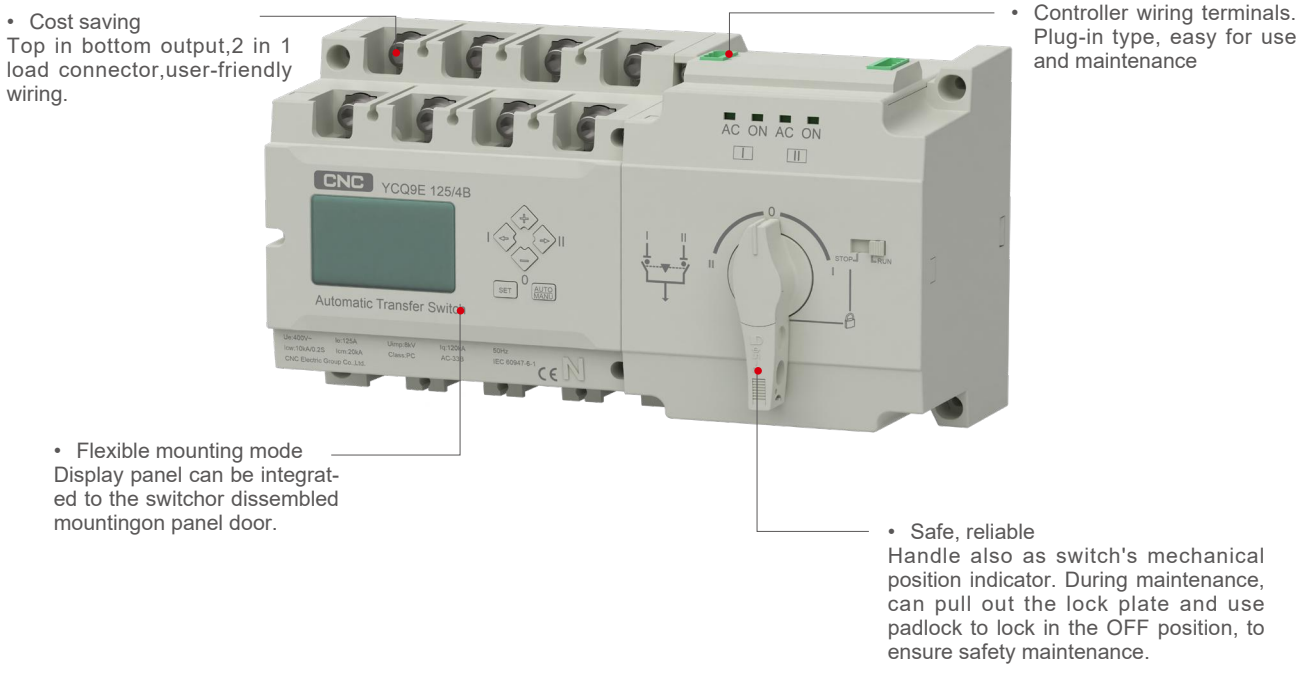

YCQ9E Automatic Transfer Switch

Technical date

Frame size		125	250	630
Number of poles (P)		3, 4	3, 4	3, 4
Rated working current Ie(A)		16, 20, 25, 32, 40, 63, 80, 100, 125	140, 160, 200, 225, 250	315, 350, 400, 500, 630
Rated working voltage Ue(V)		AC400V/415V 50Hz		
Rated insulation voltage Ui(V)		690		
Rated impulse withstand voltage Uimp(kV)		8		
Utilization Category		AC-33B		
Rated short time with stand current Icw(kA)		10	10	25
Rated short time making capacity Icm(kApeak)		20	30	50
Rated control voltage Us (V)		AC230V/50Hz		
Contacts transfer time(s)		0.6±50%	1.0±10%	1.5±10%
Transfer time(s)		1.25±10%	2.1±10%	3.3±10%
Recovery transfer time(s)		(1.25+time-delay)±10%	(2.1+time-delay)±10%	(3.3+time-delay)±10%
Power-off duration (s)		(0.6±20%)+time-delay)±10%	(1.0+time-delay)±10%	(1.5+time-delay)±10%
Operation cycles	Without load	8500	7000	3000
	With load	1500	1000	1000
	Total	10000	8000	4000
Dimention(mm)LxWxH		245x130x122	295x175x175	430x272x228
Weight (kg)		4.3	9	22.5

Controller function

Control voltage	AC230V 50/60Hz
Aux.Power	DC 24V
Power consumption	≤ 10W
Working position	Three working positions of "Main (I) closing", "Standby (II) closing" and "Double-of (0)"
Operation mode	Auto mode, manual operation, control panel operation, remote operation, Rs485 communication
Transfer mode	Auto transfer auto recovery/Auto transfer no auto recovery
Display mode	LCD
Source I monitoring	Under-voltage,over-voltage,power loss monitoring(A,B,C three phase)
Source II monitoring	Under-voltage,over-voltage,power loss monitoring(A,B,C three phase)
Generator control	Yes(Generator start and stop)
Fire-linkage control	One group voltage-free signal to cut-off both power, and 1 group voltage-free feadback
Frequencyy monitoring	No
Engine exerciser	No
Transfer delay timer(S)	Default:5s, 0~180s adjustable
Recovery delay timer(S)	Default:5s,0~180s adjustable
Under-voltage range	Default:187V,154~198V adjustable
Over-voltage range	Default:263V,242~330V adjustable
Source priority	Source I priority(default),SourceII priority,No priority
Rs485 Communicaiton	B type
LCD	Yes, LCD is separable

YCQ9E Automatic Transfer Switch

B

Wiring diagram

3P wiring diagram

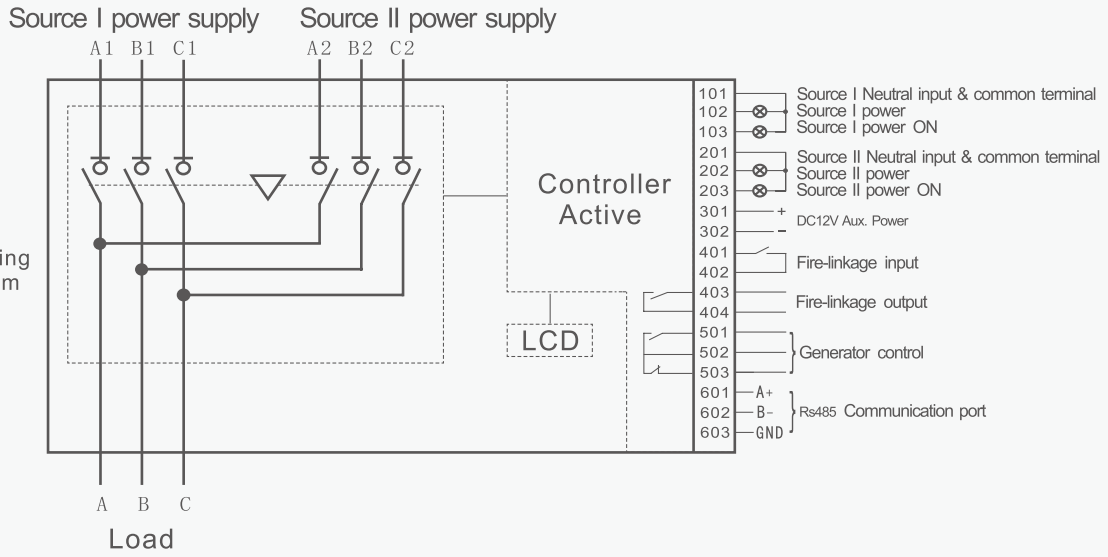

4P wiring diagram

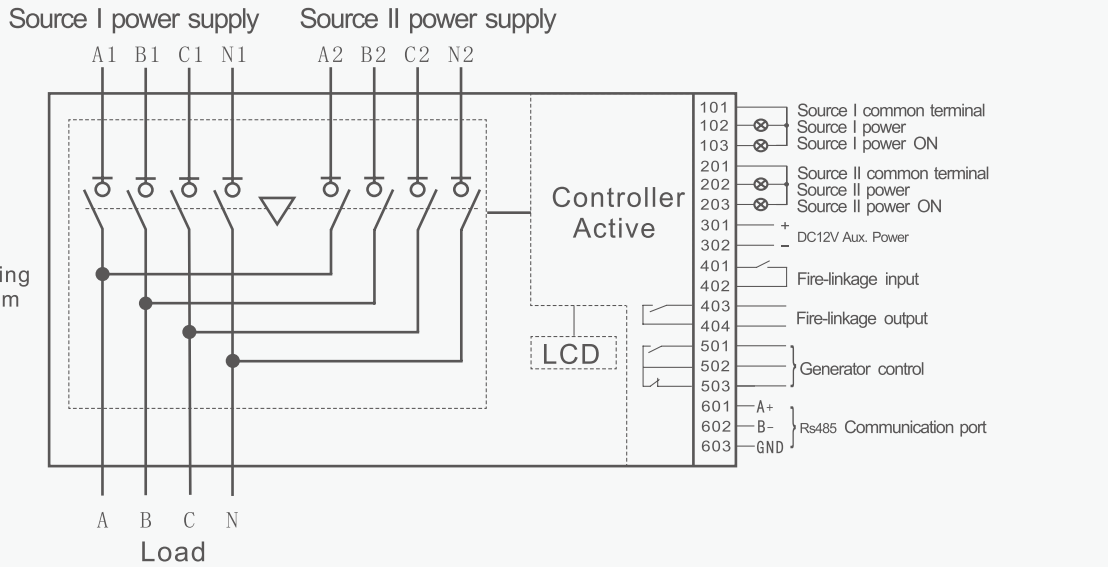

YCQ9E Automatic Transfer Switch

A type Controller

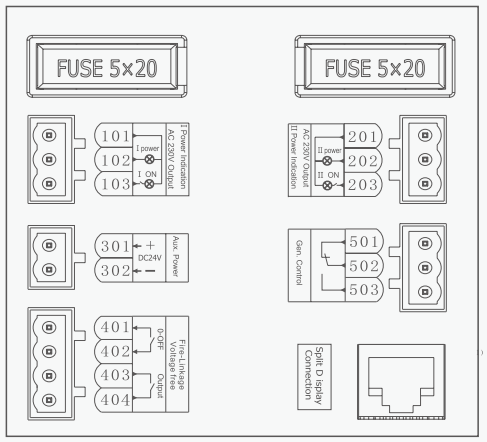

B type Controller

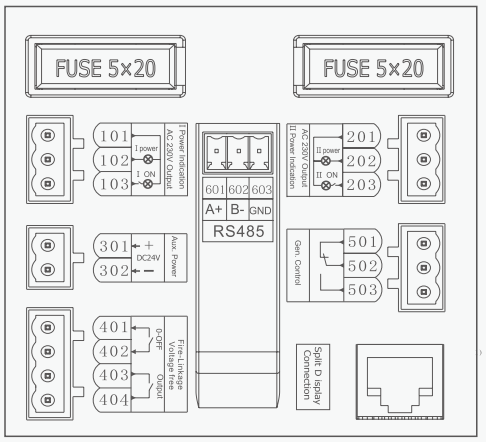

Control terminals instruction

- 101~103:Source I power supply signal output (active output AC230V/0.5A)
  101-Source I external LED indicator common neutral line and 3P neutral line input terminal
  101, 102-Source (I) power signal indication
  101, 103-Source (I) Closing signal indication
- 201~203:Source II power supply signal output (active output AC230V/0.5A)
  201-Source II external LED indicator common neutral line and 3P neutral line input terminal
  201, 202-Source (II) power signal indication
  201, 203- Source (II) closing signal indication
  Note: 101-"N1" and 201-"N2" are control power neutral wires for 3P products.
- 301~302 auxiliary power input port (DC12V/24V)
  The purpose of connecting the auxiliary power supply is to control the stat delay timer of the generator when the switch is in the grid generation mode. If there is no auxiliary power supply, the start delay time of the generator is 0s.
  If the generator delay function is not needed, the auxiliary power supply is not needed.
- 401~402 Fire linkage control port (passive)
  401, 402- firefighting linkage signal input: 401, 402 ports can only be connected to a set of normally open passive contacts, when the normally open contacts are closed, the controller immediately controls the switch transfer to double of position, cut off the load power.(Note: If the fire signal is active, the signal must be transfer via a small relay then connect the normally open contact to the controller port)
  403, 404-fire linkage signal output: Inside ports 403 and 404 are a set of passive contacts that are normally open, which are used for the feedback signal of fire fighting actions. Ports 403 and 404 are normally open, when the fire signal is input and the switch is switched to the double off position, the contacts 403 and 404 are closed. (Note: When the fire-fighting function is activated, the switch is in the double off position. If the switch needs to resume normal operation, press any key on the controller panel to remove the fire-fighting signal)
- 501~503 generator signal output port (passive)
  When the backup (II) power supply is a generator group, user can realize the automatic start function after connecting to the generator controller through terminals 501~503, inside ports of 501~503 are a group passive relay dry contact, 502 is the common terminal, 501 is the normally open point, and 502 is the normally closed point.
  In the grid-generator working mode and the controller is in AUTO mode, when the main power supply is normal. 502-501 is closed, and 502 -503 is disconnected, if the main power supply fails, and when the standby is out of power, 502-503 will be closed after the generator start delay timer, and 502-501 will be disconnected at the same time, and send signal to stat the generator. After the transfer delay timer is over, the switch will first switch to the double position. When the power generation group comes in, the controller will execute the generator warm-up delay timer.After the delay, the switch will automatically switch to the standby power supply side. During the standby side generator power supply process,when the main power supply is restored, if it is normal, the controller will control the switch to transfer to the main power supply after the return delay timer. Ater the main power ON, 502-501 will be closed after generator stop delay timer. At the same time, 502 503 will be disconnected and send signal to stop generator. Action flow can be referred to 8.2 Grid-generator mode.
- 601~603 RS485 communication port
  601—A+ 602—B- 603—GND, communication protocol MODBUS-RTU.

YCQ9E Automatic Transfer Switch

Overall and mounting dimensions(mm)

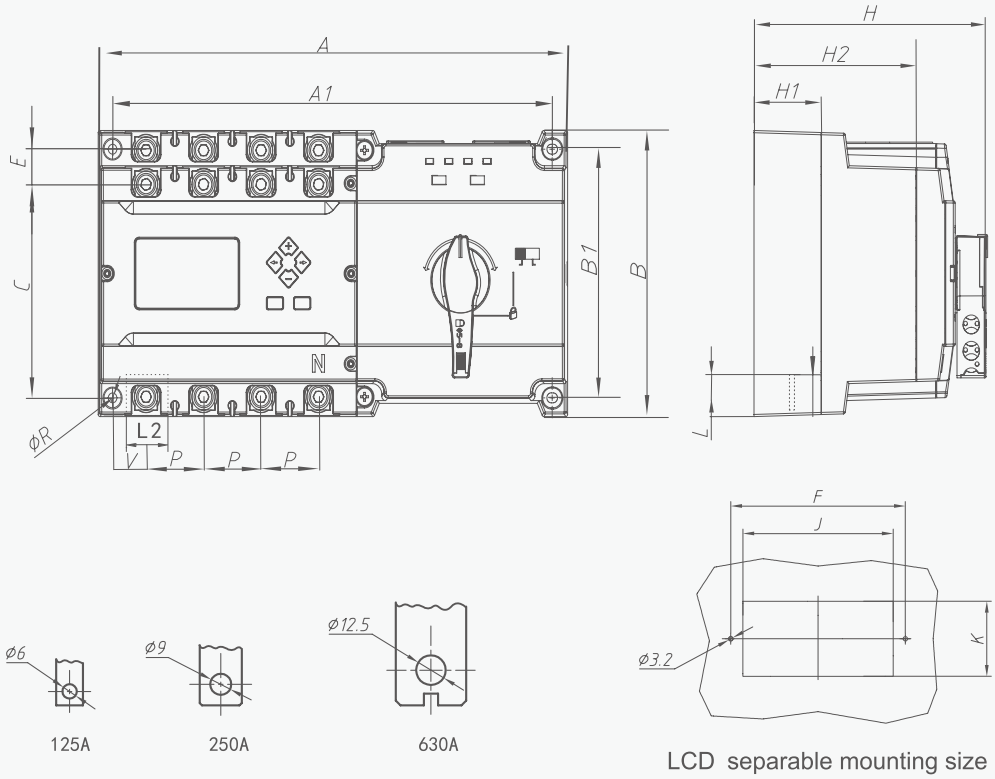

Size	Outline Dimension(mm)			Mounting Size(mm)										LCD mounting size		
In	A	B	H	A1	B1	H1	H2	C	E	R	V	P	L	L2	F	J	K
125	245	130	122	230	113	31	71	97.5	15.5	4.5	25	30	16	21.5	127	112	56
250	295	175	175	275	152	29	99	132	20	6	32	35	29	27			
630	430	272	228	400	240	41	131	207	30	9	50	58	38	42			

YCQ6 Automatic Transfer Switch

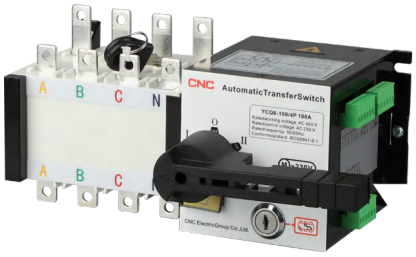

General

1. YCQ6 series automatic transfer switch is applicable in AC50/60Hz, rated voltage of AC400V, and distribution the rated current from 16A to 3200A. In motor network, there is a primary and standby power, or as the utility to generator in loading changeover. Meanwhile, it used to insulate in unfrequent connection break circuit as the standby power.
2. This products are widely used in hospitals, banks, high-rise architecture and so on where are very important places with no electric failure allowed for power supply, distribution and automatic system.

   PS: when using bridge type connection, please instruct if it applies to the line end or the outlet end.

   Standard:IEC 60947-6-1

Type designation

YC Q 6 - □ □ □ □

- Wiring Method:Two-in, two-out / Two-in, one-out
- Rated current;
- Pole: 3P/4P;
- Frame size current;
- Design number;
- PC Class Automatic Transfer Switch;
- CNC

Features

1. Double row composite contact, side pull mechanism, micromotor pre-storage and microelectronic control technology are adopted to achieve zero flash (no arc extinguishing chamber).
2. Reliable electromechanical interlock, and each component is implemented independently with isolation switch for safe and reliable use.
3. Using over zero technology, the state of emergency can be enforced under the zero(cut down the 2 ways in the meanwhile) to meet the needs of Fire Fighting.
4. The execution load isolation switch is driven by a single motor, and the conversion is reliable, smooth, no noise and small impact.
5. The operator only implements the isolated drive of the electrical load by switching the transient current, and it can work stably without providing current, and the energy saving is significant.
6. Executive load disconnector chain with a mechanical device used to ensure that reliable standby power of non-interference in each other.
7. Obvious off position indicator, padlocks and other functions, high reliability and service life of more than 8000 times.
8. Mechatronics design, switching conversion accurate, flexible, smooth and adopt international advanced logic control technology, anti-interference capability, without external interference.
9. Cooperation with the main power on and standby power off, or the main power off and standby on, the main power and standby power are both off, three kinds stability working.(I-O-II)
10. Easy to install and the control circuit uses direct plug terminal.
11. Four operation modes: emergency manual operation, electric remote control operation, emergency disconnected operation under the automatic state, automatic control operation.

YCQ6 Automatic Transfer Switch

Technical data

Frame class	100									160		250		630		1600				3200		
Rated current In(A)	16	20	25	32	40	50	63	80	100	125	160	200	250	400	630	800	1000	1250	1600	2000	2500	3200
Rated insulation voltage(Ui)	500V															800V						
Rated concussion withstand voltage(Uimp)	6kV															8kV						
Rated working voltage(Ue)	AC400V																					
Using category	AC-33iB																					
Rated short-circuit connection capacity	8KA									17KA				67KA								
Rated short-time withstand current(Icw)	5KA/30ms									10KA/60ms				12.6KA /60ms								
Transfer time I-II or II-I	≤ 3s													≤ 5s								
Control voltage	AC230V																					
Rated frequency	Start	20W								325W				355W		400W	440W			600W		
	Normal									62W				74W		90W	98W			120W		

YCQ6 Automatic Transfer Switch

Overall and mounting dimensions(mm)

Installation dimensions(16~1600A)

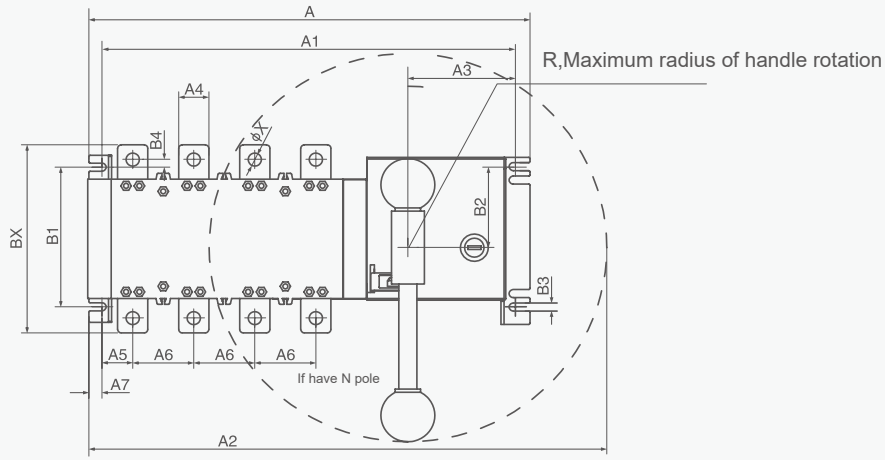

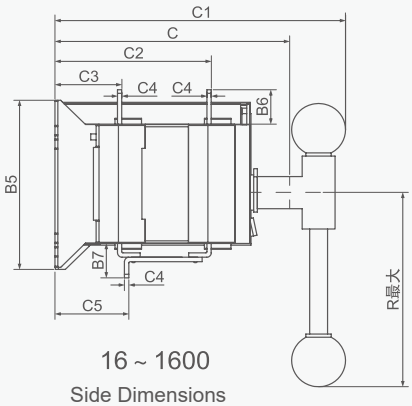

16 ~ 1600
Side Dimensions

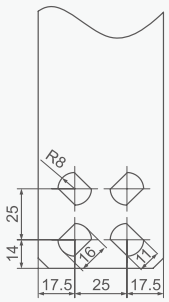

1000A
Connection Busbar

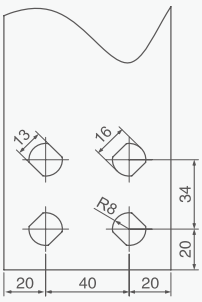

1250A ~ 1600A
Connection Busbar

Specification	Total size																						
	A	A1	A2	A3	A4	A5	A6	A7	BX	B1	B2	B3	B4	B5	B6	B7	C	C1	C2	C3	C4	C5	ΦX	R
100A/3P	232	222	258	83	14	15	30	5	128	84	43	7		106			146	169	92	40	2.5	67.5	6	114
100A/4P	244	234	268	83	14	15	30	5	128	84	43	7		106			146	169	92	40	2.5	67.5	6	114
250A/3P	270	252	325	95	20	20	36	7	143	103	52	6.4	4	141	25	33	194	230	126	56	3.5	59	8.5	153
250A/4P	308	288	352	98	20	22	36	7	143	101	52	6.4	4	141	25	33	194	230	129	59	3.5	62	8.5	153
400A/3P	315	300	366	93	25	28	50	7	184	107	52	6.4	16	141	30	44	209	247	146	64	3.5	67	10.7	153
400A/4P	369	350	413	97	25	28	50	7	184	108	52	6.4	16	141	30	44	211	249	145	63	3.5	67	10.7	153
630A/3P	374	358	608	92	32	39	65	7	262	179	95	8.7	17	218	40	62	273	313	196	84	5	84	11	335
630A/4P	433	416	663	95	32	39	65	7	262	179	97	8.7	17	218	40	62	273	313	197	84	5	84	11	335
800A/3P	374	358	608	92	40	39	65	7	269	179	95	8.7	17	218	48	61	273	313	196	84	5	84	12	335
800A/4P	433	416	663	95	40	39	65	7	269	179	97	8.7	17	218	48	61	273	313	197	84	5	84	12	335
1000A/3P	520	500	867	85	60	65	120	9	343	220	112	11		250	53	90	330	385	253	110	8	110		440
1000A/4P	633	613	980	85	60	65	120	9	343	220	112	11		250	53	90	330	385	253	110	8	110		440
1250A/3P	520	500	867	85	80	65	120	9	367	220	112	11		250	69	98	330	385	253	110	8	110		440
1250A/4P	633	613	980	85	80	65	120	9	367	220	112	11		250	69	98	330	385	253	110	8	110		440
1600A/3P	520	500	867	85	80	65	120	9	372	220	112	11		250	69	102	330	385	254	111	10	111		440
1600A/4P	633	613	980	85	80	65	120	9	372	220	112	11		250	69	102	330	385	254	111	10	111		440

YCQ6 Automatic Transfer Switch

B

Installation dimensions(2000~3200A)

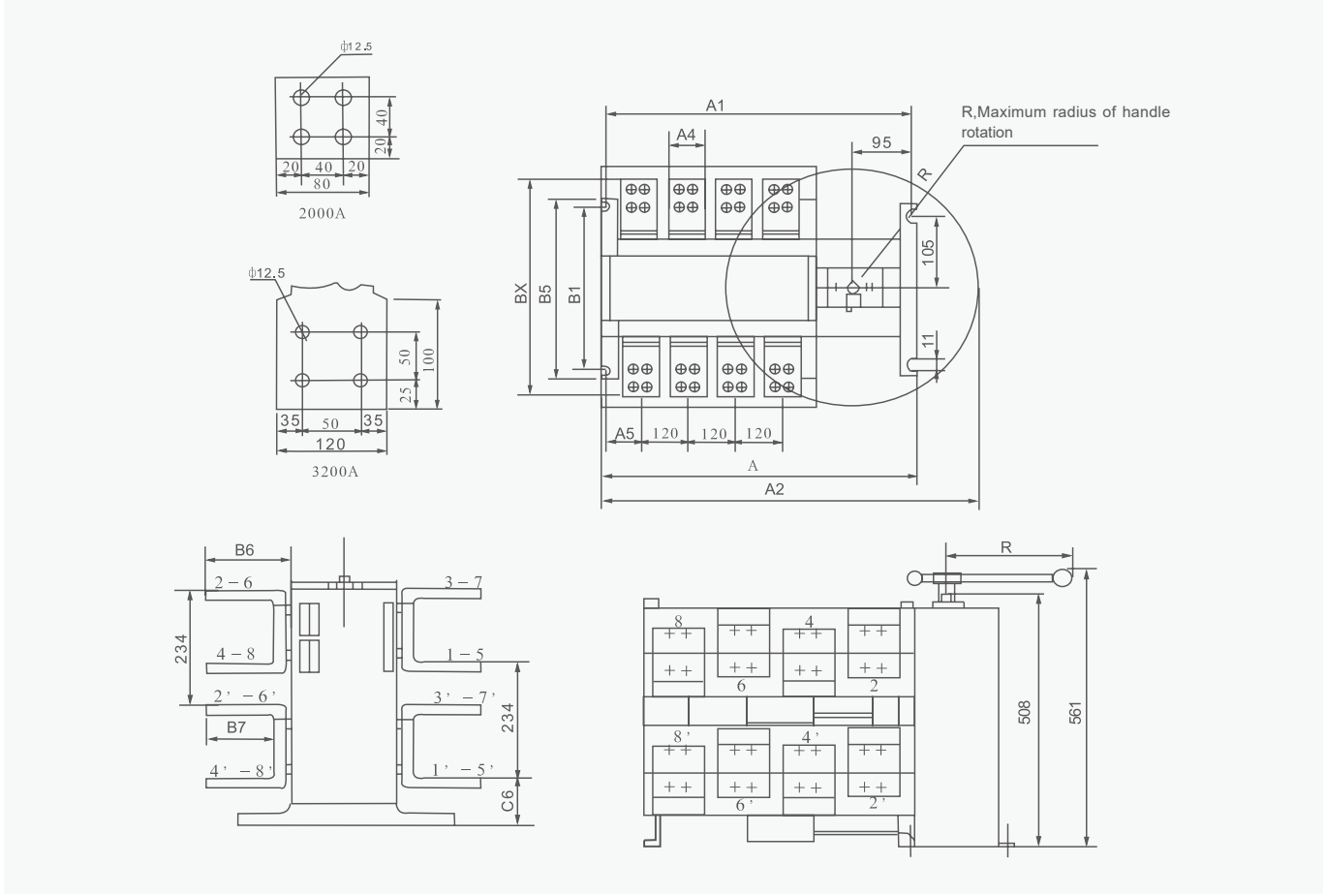

Specification	A	A1	A2	A4	A5	BX	B1	B5	B6	B7	C6	R
2000A/3P	534	493	855	80	15	446	220	250	123	94	102	438
2000A/4P	649	608	970	80	15	446	220	250	123	94	102	438
2500A/3P	534	493	855	80	20	460	220	250	128	94	102	438
2500/4P	649	608	970	80	22	460	220	250	128	94	102	438
3200A/3P	534	493	855	120	28	496	220	250	147	112	105	438
3200/4P	649	608	970	120	28	496	220	250	147	112	105	438

YCQ6s Series Automatic Transfer Switch



General

The YCQ6s series is a PC-class Automatic Transfer Switch (ATS), designed for use in two-source neutral-earthed systems operating at AC 50/60 Hz, rated voltage up to 400V, and rated operating current from 16A to 630A. It automatically transfers the supply between sources upon detection of an abnormality in one source, ensuring reliable and safe power continuity. Widely used for automatic transfer between the primary (normal) supply and secondary (standby) supply in power distribution systems, as well as automatic changeover between two load circuits and safe electrical isolation.

Standard: IEC 60947-6-1

Type designation

YCQ6s - 100 4 A 100A

Company code		Test category	Current	Functions	Functions
YCQ6s	-	100	4	A	100A
YCQ6s		100 160 250 400 630	3P 4P	A: Basic Type B: Enhanced Type	6A 10A 16A 20A 25A 32A 40A 50A 63A 80A 100A 125A 160A 180A 200A 225A 315A 400A 500A 630A

Operating conditions

1. Ambient air temperature: -5°C to +40°C; 24-hour average temperature not exceeding +35°C.
2. At a maximum temperature of +40°C, relative humidity shall not exceed 50%; maximum monthly average relative humidity: 90%. Higher relative humidity is permissible at lower temperatures. Special measures shall be taken against condensation caused by occasional temperature variation.
3. Installation altitude: not exceeding 2000 m above sea level.
4. Pollution degree: Pollution Degree 3.
5. Utilization categories: AC-31A, AC-33A, AC-33iB.
6. Applicable to Environment A. Use of this product in Environment B may cause harmful electromagnetic interference; in such cases, the user shall take appropriate mitigation measures.

YCQ6s Series Automatic Transfer Switch

Technical data

Model / Specification	Unit	YCQ6s-100	YCQ6s-160	YCQ6s-250	YCQ6s-400	YCQ6s-630
Number of Poles		3,4				
Applicable Standard		IEC60947-6-1				
Device Class		PC Class				
Utilization Category		AC-33iB				
Rated Insulation Voltage Ui	V	690				
Rated Impulse Withstand Voltage Uimp	kV	8				
Rated Operating Voltage Ue	V	A400				
Rated Operating Current Ie	A	20,40,60,80,100	100,125,160	200,250	315,350,400	500,630
Rated Making Capacity Icm	kA	10Ie				
Rated Conditional Short-Circuit Current Iq	kA	120				
Rated Short-Time Withstand Current Icw	KA/1s	7			9	13
Control Supply Voltage	V	AC230				
Transfer Time	S	0.45				0.6

Controller Specifications

Function	Feature	Controller Type	
		Type A	Type B
I (Normal) / II (Standby) Indication & Signal Output	Power supply indication	■	■
	Closed position indication	■	■
	Active signal output port for power supply indication	-	■
	Closed position status signal output port	-	■
Voltage Monitoring	Phase voltage	Single-phase	Three-phase
	Phase loss detection	-	■
	Overvoltage detection	-	■
	Undervoltage detection	-	■
Transfer Mode	Auto-transfer with auto-restoration	■	■
	Auto-transfer without auto-restoration	-	■
Fire System Interlock	Passive fire system interlock	■	-
	DC 24V fire system interlock	-	■
Other Functions	Generator start function	■	■
	Voltage and frequency monitoring & detection	-	■
	LCD display	-	■
	RS-485 communication port	-	■

YCQ6s Series Automatic Transfer Switch

Terminal Description

100A-630A Basic Type Wiring

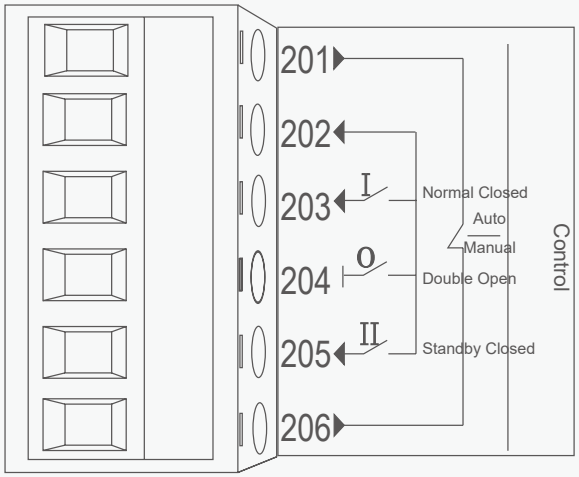

External Terminals

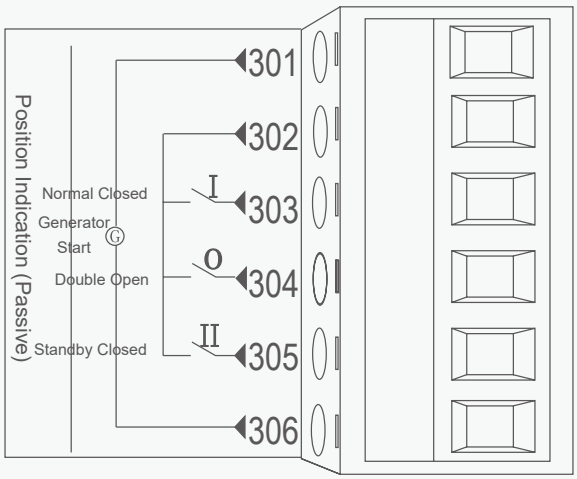

External Terminals

Enhanced Type Wiring

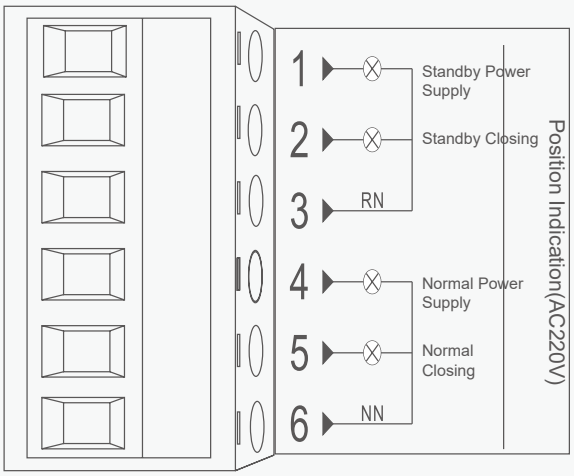

External Terminals

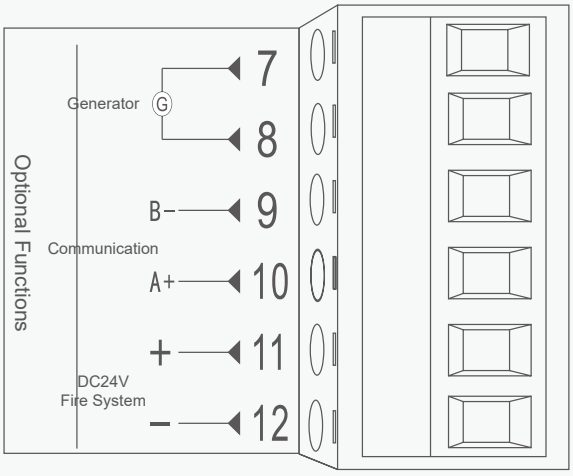

External Terminals

YCQ6s Series Automatic Transfer Switch

Overall and mounting dimensions(mm)

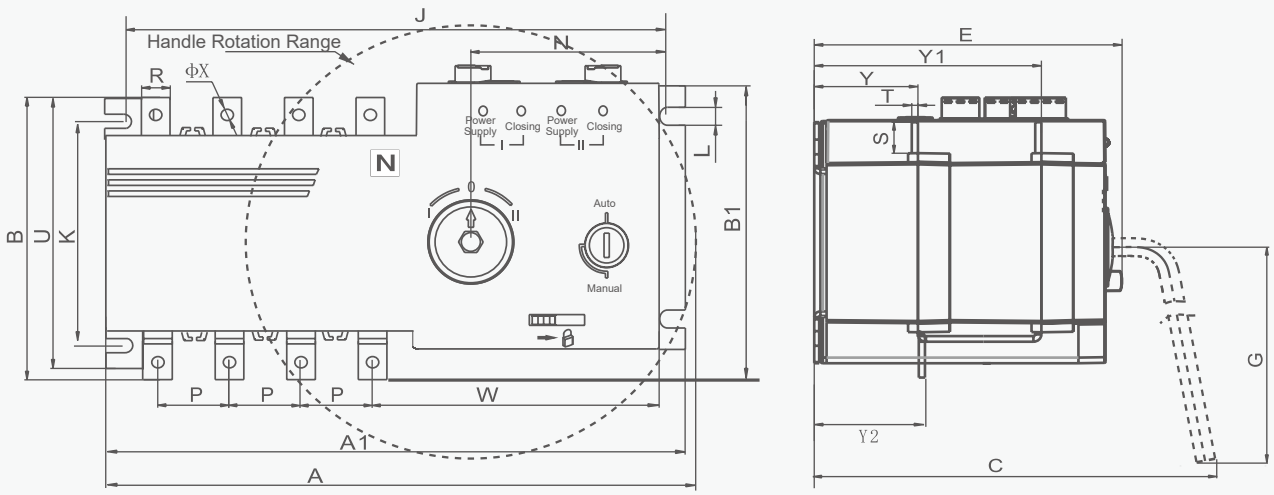

Specification	External Dimensions (mm)							Mounting Dimensions (mm)													
In	A	A1	B	B1	C	E	G	J	K	L	N	P	R	S	T	U	W	X	Y	Y1	Y2
100A	280	240	130	144	153	115	125	230	85	6.5	83	30	14	18	2.5	105	125	6.2	38	89	39.5
160A	330	295	149	172	204	168	125	283	110	7	85	36	20	25	3	134	145	9	61	135	66
250A	385	360	180	190	220	183	125	350	110	7	90	50	25	30	3	134	158	11	65	147	68.5
400A	445	436	255	255	280	243	125	424	180	11	90	65	40	50	5	208	173	11	86	200	75
630A	445	436	276	276	280	243	125	424	180	11	90	65	40	50	5	208	173	13	86	200	75

YCQR-63 Automatic Transfer Switch





General

YCQR-63 automatic transfer switch is a PC class infrequent change-over switch, with two-station design (commonly used for A and standby for B), suitable for AC systems with AC 50-60Hz and rated current 6A-63A. The main function of the automatic transfer switch is when the main power (common power supply A) fails, the ATS will automatically switch to the backup power (Backup power supply B) to continue working (switching speed <50 milli-seconds), which can effectively solve the troubles caused by power outages.

Type designation

Model		Shell frame	Number of poles	Rated current	Voltage
YCQR	-	63	2P	6A	AC220V
Din-rail instal-lation Automatic transfer switch		63	2P 4P	6A 10A 16A 20A 25A 32A 40A 50A 63A	AC220V AC110V

Technical data

Rated current(A)	6,10,16,20,25,32,40,50,63	
Rated current of shell frame grade	63	
Rated operating current Ie(A)	6A/10A/16A/20A/25A/32A/40A/50A/63A	
Rated insulation voltage UI	690V	
Rated impulse withstand voltage Uimp	8kV	
Rated working voltage Ue	AC220V/AC110V	
Rated frequency	50/60Hz	
Class	PC class: can be switched on and loaded without generating short-circuit current	
Pole number	2P	4P
Rated short-circuit current Iq	50KA	
Short circuit protection device (fuse)	RT16-00-63A	
Rated impulse withstand voltage	8kV	
Control circuit	Rated control voltage Us: AC220V, 50Hz Normal working conditions: 85%Us-110%Us	
Auxiliary circuit	AC220V/110V 50 Hz Ie=5A	
Contactor change-over time	<50ms	
Operation change-over time	<50ms	
Return change-over time	<50ms	
Power off time	<50ms	
Change-over operation time	<50ms	
Mechanical life	≥8000 times	
Electrical life	≥1500 times	
Usage category	AC-31B	

YCQR-63 Automatic Transfer Switch

Overall and mounting dimensions

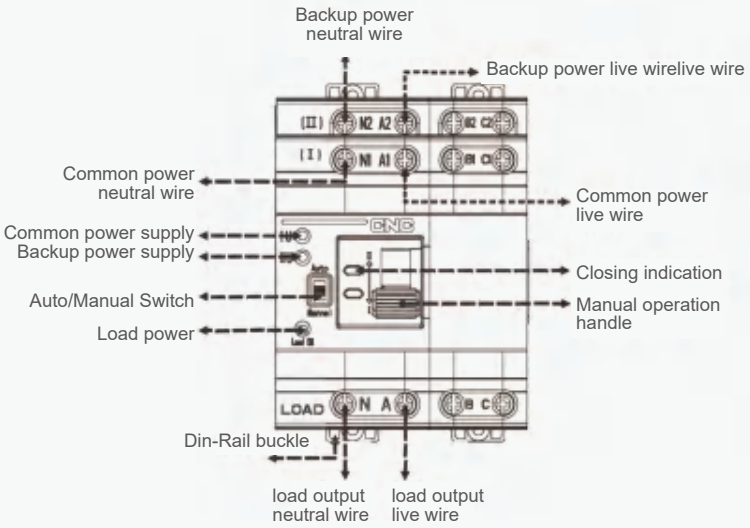

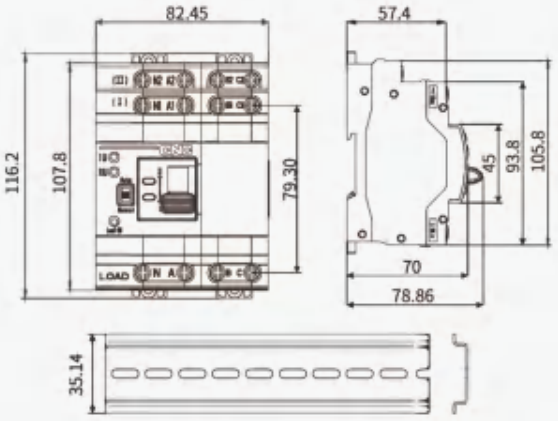

Note: Terminal wiring area: fit for (1~25)mm^2
Wire connection screw is M5, torque: 2.5N.m.

YCQ4E/YCQ4R PC Type Automatic Transfer Switch



YCQ4-100E

General

The dual power automatic switch is a newly developed miniature household power switch,which is mainly used to test whether the main power supply or standby power supply is normal.When the normal power supply is abnormal, the standby power supply starts to work immediately,which ensures the continuity,reliability and safety of power supply,This product is specially designed for household rail installation and is specially used for Pz30 distribution box.

The dual power automatic switch is suitable for emergency power supply systems with 50 or 60 Hz and rated 400V AC.ATS has the characteristics of solid structure,reliable conversion,-convenient installation and maintenance and long service life.It is widely used in various occasions where power failure cannot be sustained,and can be operated by electricity or manually.ATS is composed of TSE and controller.

Standard : IEC 60947-6-1

Operating conditions

Ambient air temperature

The maximum temperature shall not exceed 40°C the minimum temperature shall not be lower than -5°C,and the average temperature within 24 hours shall not be higher than 35 °C.

Altitude

The altitude of the installation site should not be higher than 2000m.



YCQ4-100R

Atmosphenc conditions

When the maximum temperature reaches 40°C,the relative humidity of the installation site should not exceed 50%;when the temperature is the minimum temperature -5°C,the relative humidity is higher, for example, the temperature is 25°C,and the relative humidity is 90%. Due to the temperature change,special measures should be taken to deal with the occasion-al condensation on the surface of the product.

Pollution degree

The pollution degree of ATS conforms to degree 3 specified in IEC 60947-6-1 Installation category. The installation type of ATS conforms to the category specified in IEC 60947-6-1.

Installation conditions

ATS can be installed vertically in control cabinet or distribution cabinet. Make sure the instal-lation distance meets the requirements in Figure 8.

YCQ4E/YCQ4R PC Type Automatic Transfer Switch

Type designation

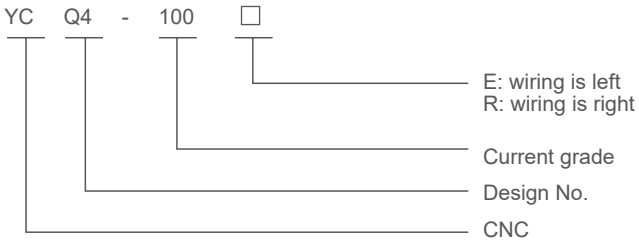

Technical data

Specification	100A		
Rated current In (A)	16,20,25,32,40,50,63,80,100		
Insulation voltage Ui	AC690V,50Hz		
Rated voltage Ue	AC400V,50Hz		
Classification	PC class:can be manufactured withstood without short circuit current		
Utilization category	AC-33iB		AC-31B
Pole No.	2P	3P	4P
Weight(kg)	1.7	2.1	2.6
Electrical life	2000 times; Manual operation: 5000 times		
Rated short circuit current Iq	50kA		
Short circuit protection device(fuse)	RT16-00-63A		
Rated impulse withstand voltage	8kV		
Control circuit	Rated control voltage Us:AC220/50Hz Normal working conditions: 85-110%Us		
Auxiliary circuit	2 relays,each with two sets of contact converter contact capacity:AC200V/50Hz Ie=5A		
Conversion time of contactor	<50ms		
Operation conversion time	<50ms		
Return conversion time	<50ms		
Power off time	<50ms		

YCQ4E/YCQ4R PC Type Automatic Transfer Switch

Fig.1

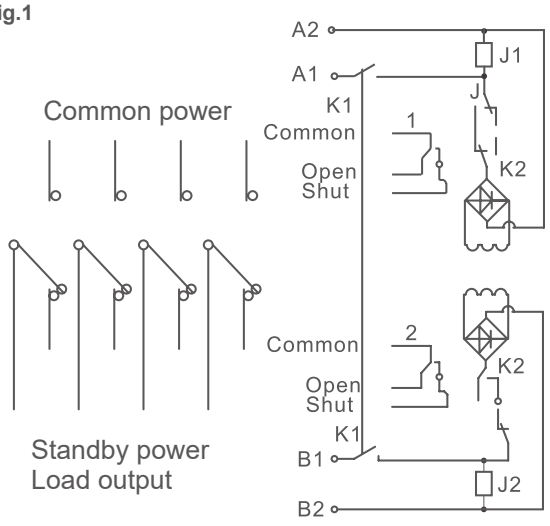

Wiring diagram

K1:manual/automatic selector switch K2,

K3:internal valve position switch

J1:common 220V A power relay

J2:standby 220V B power relay

1:passive signal output of A power supply

2:passive signal output of B power supply

Wiring diagram of YCQ4E

Fig.2

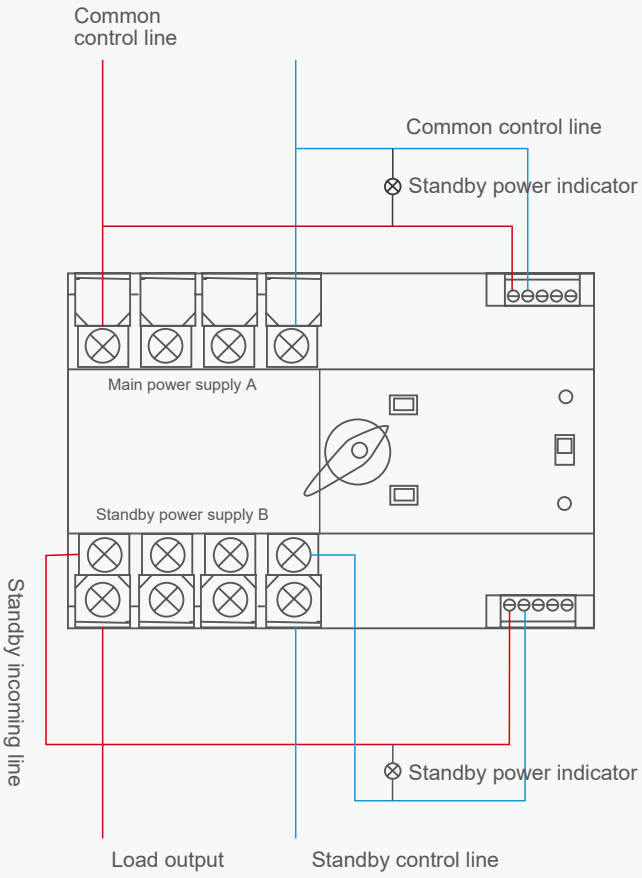

YCQ4E/YCQ4R PC Type Automatic Transfer Switch

100/2P wiring diagram of YCQ4E

Fig.3

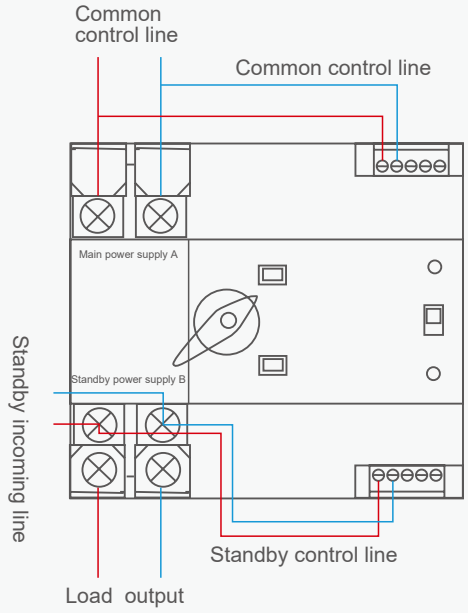

100/3P wiring diagram of YCQ4E

Fig.4

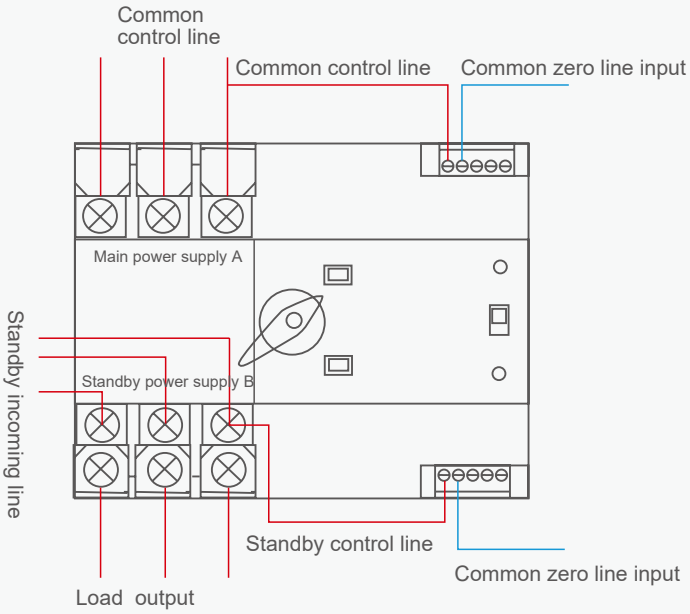

100/4P wiring diagram of YCQ4E

Fig.5

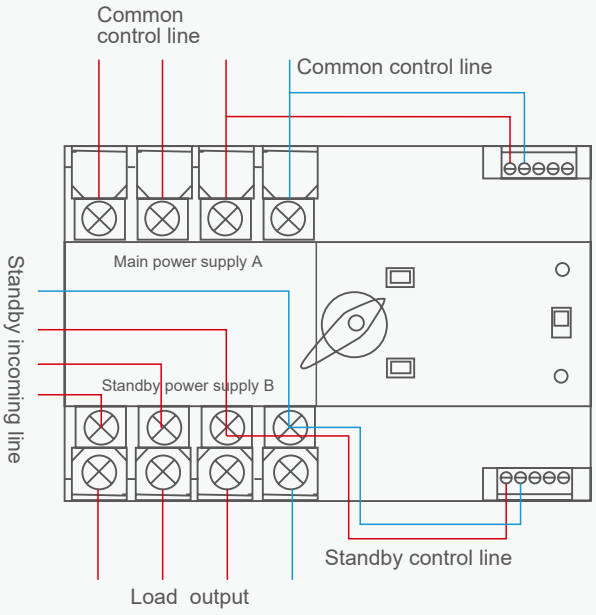

YCQ4E/YCQ4R PC Type Automatic Transfer Switch

Timing switching connection mode of YCQ4E

Fig.6

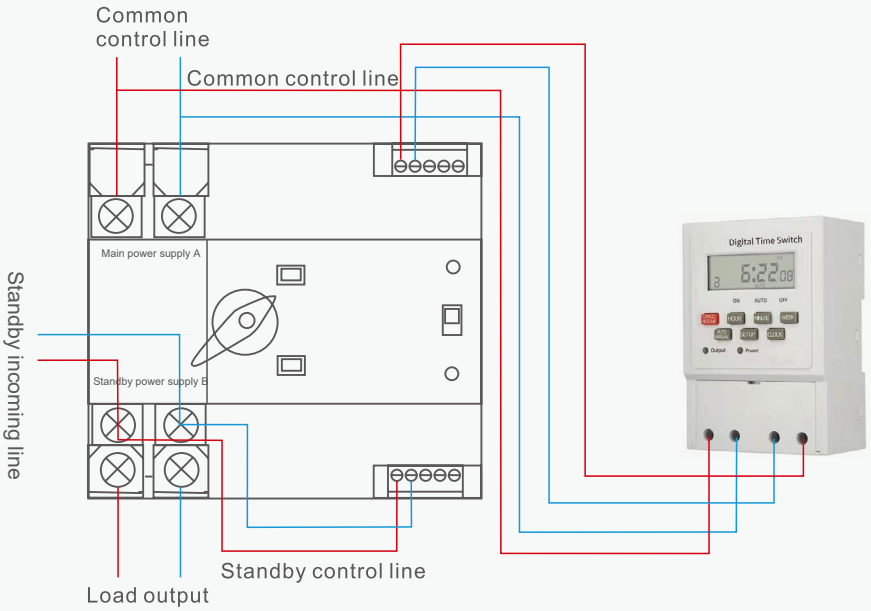

Special connection mode of photovoltaic inverter of YCQ4E

Fig.7

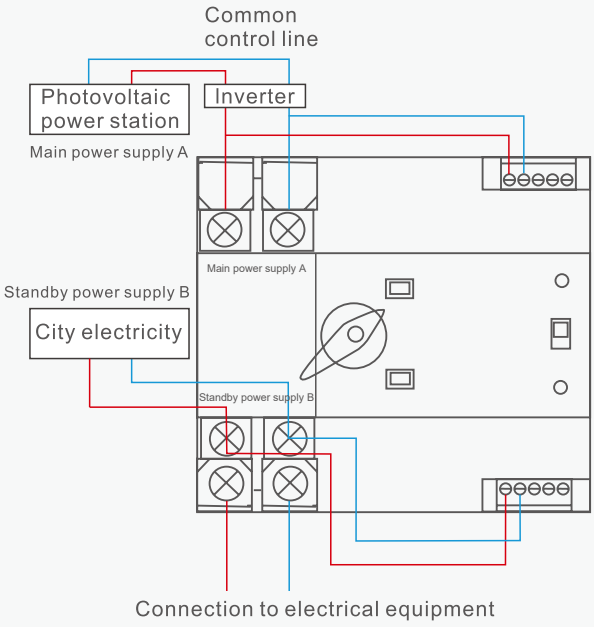

B

Overall and mounting dimensions(mm) of YCQ4E

Fig.8

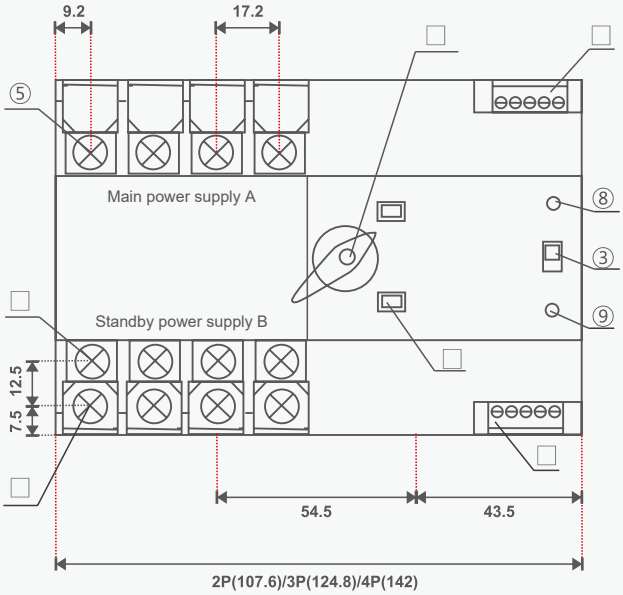

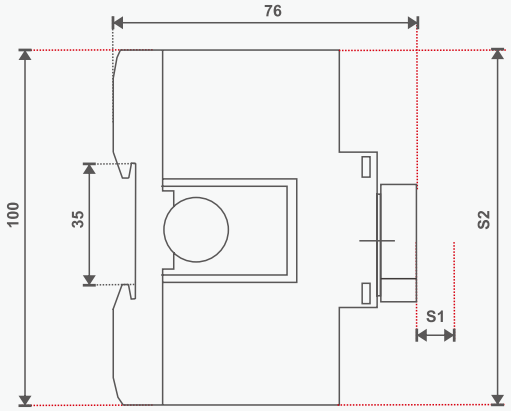

Safe distance:S1: ≥30mm S2:≥203mm

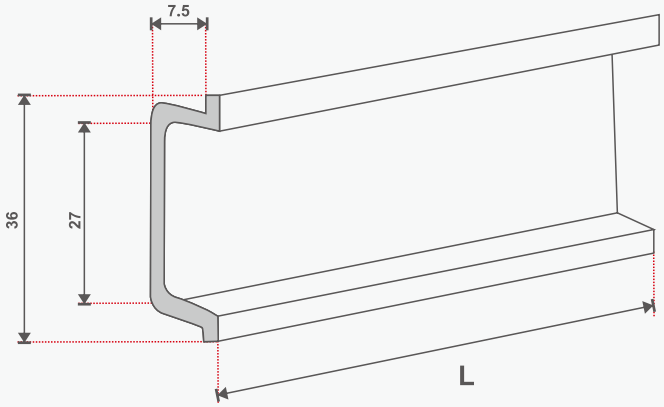

1. Status position indication
2. Main power terminal and passive signal(AC220V)
3. Manual/automatic switch
4. Manual handle
5. Main terminal of common power side
6. Main terminal of standby power side
7. Main terminal of load connection side
8. A power indicator
9. B power indicator
10. Standby power terminal and passive signal(AC220V)

YCQ4E/YCQ4R PC Type Automatic Transfer Switch

Controller wiring diagram of YCQ4R

Fig.1

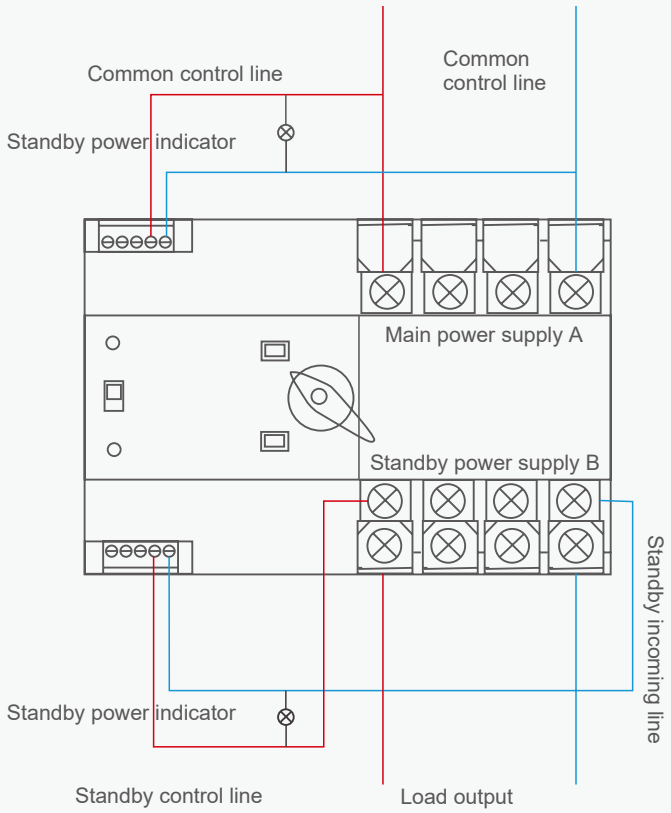

100/2P wiring diagram of YCQ4R

Fig.2

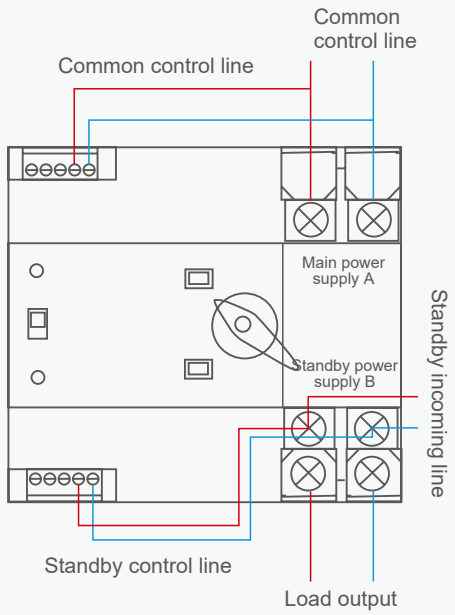

100/3P wiring diagram of YCQ4R

Fig.3

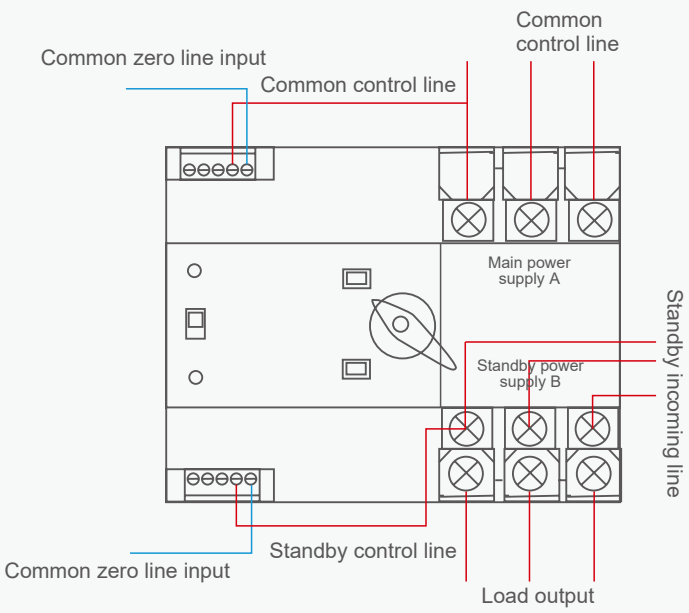

YCQ4E/YCQ4R PC Type Automatic Transfer Switch

100/4P wiring diagram of YCQ4R

Fig.4

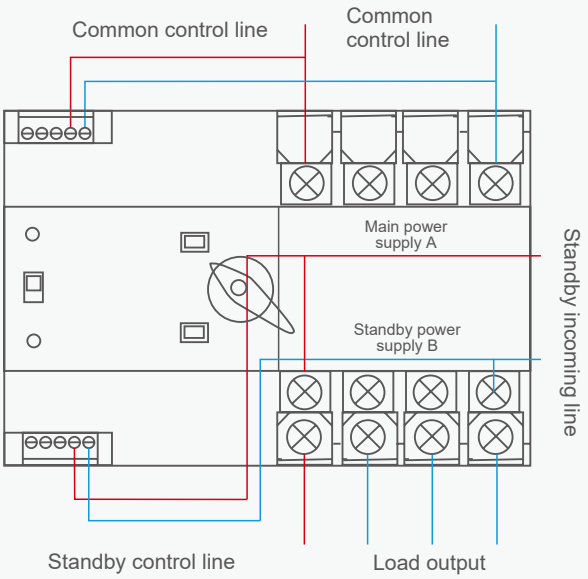

Timing switching connection mode of YCQ4R

Fig.5

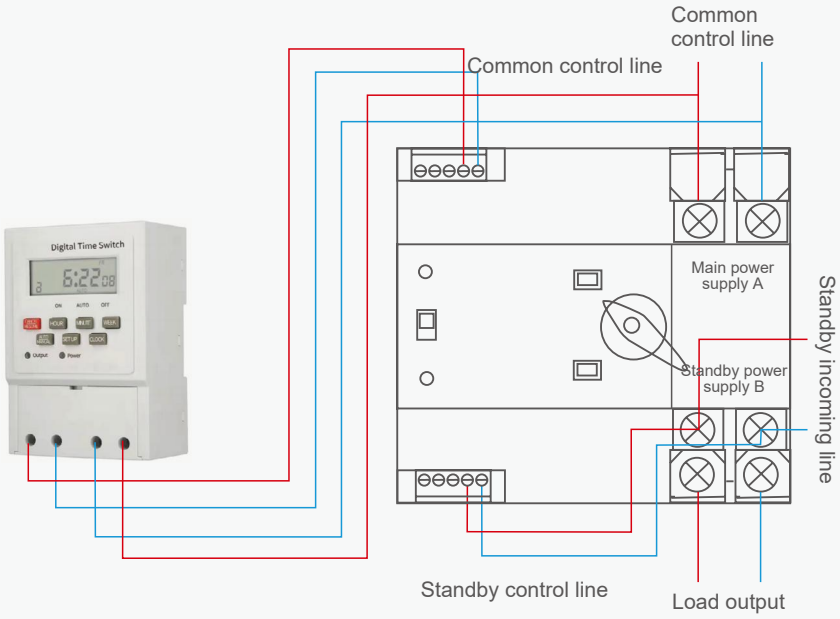

B

Special connection mode of photovoltaic inverter of YCQ4R

Fig.6

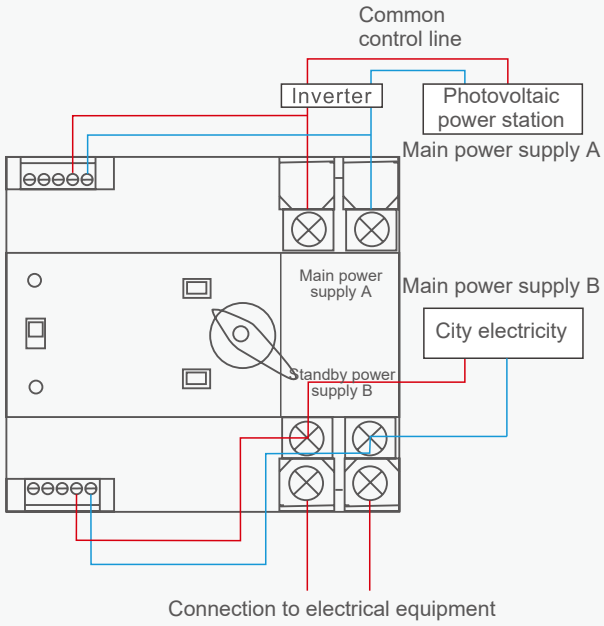

YCQ4E/YCQ4R PC Type Automatic Transfer Switch

Overall and mounting dimensions(mm) of YCQ4R

Fig.7

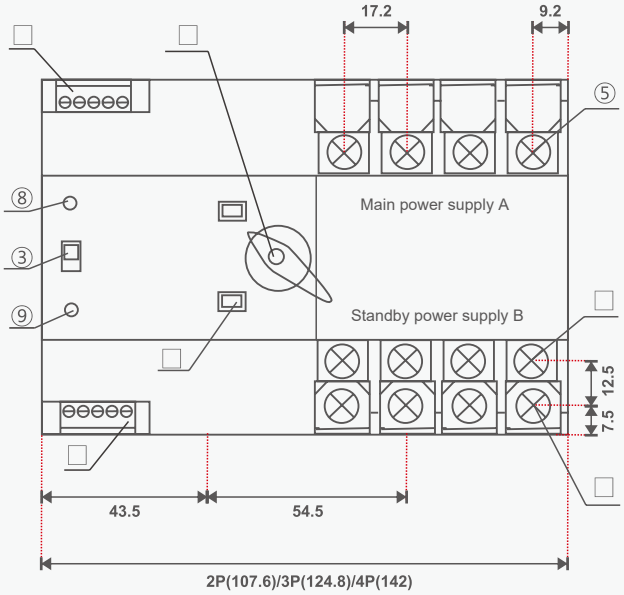

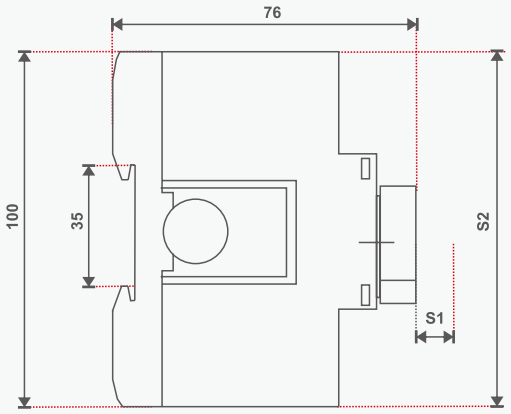

Safe distance:S1:≥30mm S2:≥203mm

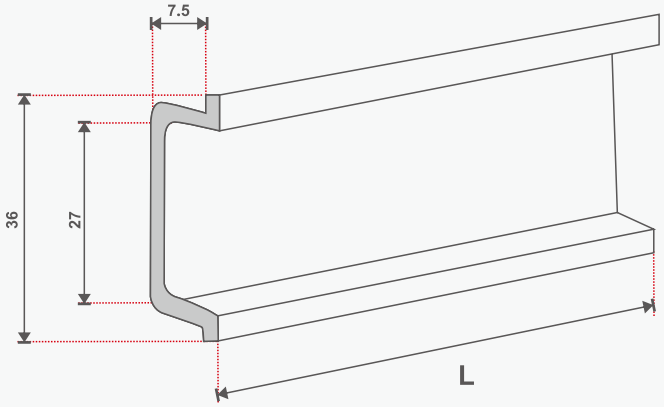

1. Status position indication
2. Main power terminal and passive signal(AC220V)
3. Manual/automatic switch
4. Manual handle
5. Main terminal of common power side
6. Main terminal of standby power side
7. Main terminal of load connection side
8. A power indicator
9. B power indicator
10. Standby power terminal and passive signal(AC220V)

YCQ3F Automatic Transfer Switch



General

Automatic Transfer Switching Equipment (ATSE) is designed for three-phase four-wire dual power supply systems with an AC frequency of 50/60Hz, a rated operational voltage of AC 400V, and a rated operational current up to 630A. It automatically transfers one or multiple load circuits from one power source to another to ensure continuous and reliable power supply.

This product is suitable for critical applications in industrial facilities, commercial buildings, high-rise buildings, and residential premises where reliable power continuity is required.

Characteristics

1. Millisecond-level transfer without power interruption
2. High making and breaking capacity
3. Strong anti-interference capability
4. Compact design
5. Easy installation

Type designation

Product Name		Frame Current	Number of Poles	Function	Rated Current
YCQ3F	-	125	2	F	20A
YCQ3F		125	2:2P 3:3P 4:4P	No Code: Utility Power–Utility Power F: Utility Power–Generator Power G: Utility Power–Photovoltaic Power	16A 20A 25A 32A 40A 50A 63A 80A 100A 125A

Operating conditions

1. Ambient air temperature: The upper limit of ambient air temperature is +40°C, the lower limit is -5°C, and the average temperature within 24 h shall not exceed +35°C;
2. Altitude: The altitude of the installation site shall not exceed 2000 m;
3. Atmospheric conditions: The relative humidity of the atmosphere shall not exceed 50 % at the maximum ambient temperature of +40°C.Higher relative humidity is permitted at lower temperatures, e.g. up to 90 % at +20°C.Special measures shall be taken against occasional condensation caused by temperature variation;
4. Pollution degree: Pollution degree 3.

YCQ3F Automatic Transfer Switch

Technical data

Model	YCQ3F-100	YCQ3F-125
Device Class	PC-class	
Compliant Standard	IEC 60947-6-1	
Rated Operational Voltage (V)	2P: AC-230V 3P/4P: AC-400V	
Normal Operating Range	85%Ue~110%Ue	
Frequencyy	50/60Hz	
Number of Poles	2P / 3P / 4P	
Rated Insulation Voltage (V)	800	
Rated Current Ie (A)	16, 20, 25, 32, 40, 50, 63, 80, 100	125
Impulse Withstand Voltage (kV)	8	
Rated Short-time Withstand Current Icw (kA)	5 / 30ms	
Rated Short-circuit Making Capacity Icm (kA)	8	
Utilization Category	(10A-50A) AC-33B; (63A) AC-33iB; (80-125A) AC-32B	
Contact Transfer Time	30ms±50%	
Switching Operating Time	70ms±50%	
Return Time	30ms±50%	
Operating Mode	Auto-switch & auto-recover; Auto-switch without auto-recover (customizable)	
Power Quality Detection	Normal single-phase, standby single-phase (over-voltage, under-voltage, phase-loss, loss-of-voltage, phase sequence, frequency detection)	
Power Voltage Trip Setting	Under-voltage protection: 160V±10%; Over-voltage protection: 285V±5%	
Power Voltage Recovery Setting	Under-voltage recovery: 185V±10%; Over-voltage recovery: 270V±5%	
Mains to Generator	Optional	
Mains to PV	Optional	
Fire-fighting Double-open Function	None	
Remote Control Function	None	
Delay Time	Default no delay (fixed delay customizable)	
EMC Environment	Environment B	
Ingress Protection	IP20 (excluding main circuit terminals)	
Special Requirements	None (under normal installation conditions)	
Suitable for Isolation	Yes	
Switch Positions	Normal (I), Double-open (0), Standby (II)	
Mechanical Endurance	10000	
Electrical Endurance	1500	

YCQ3F Automatic Transfer Switch

Wiring diagram

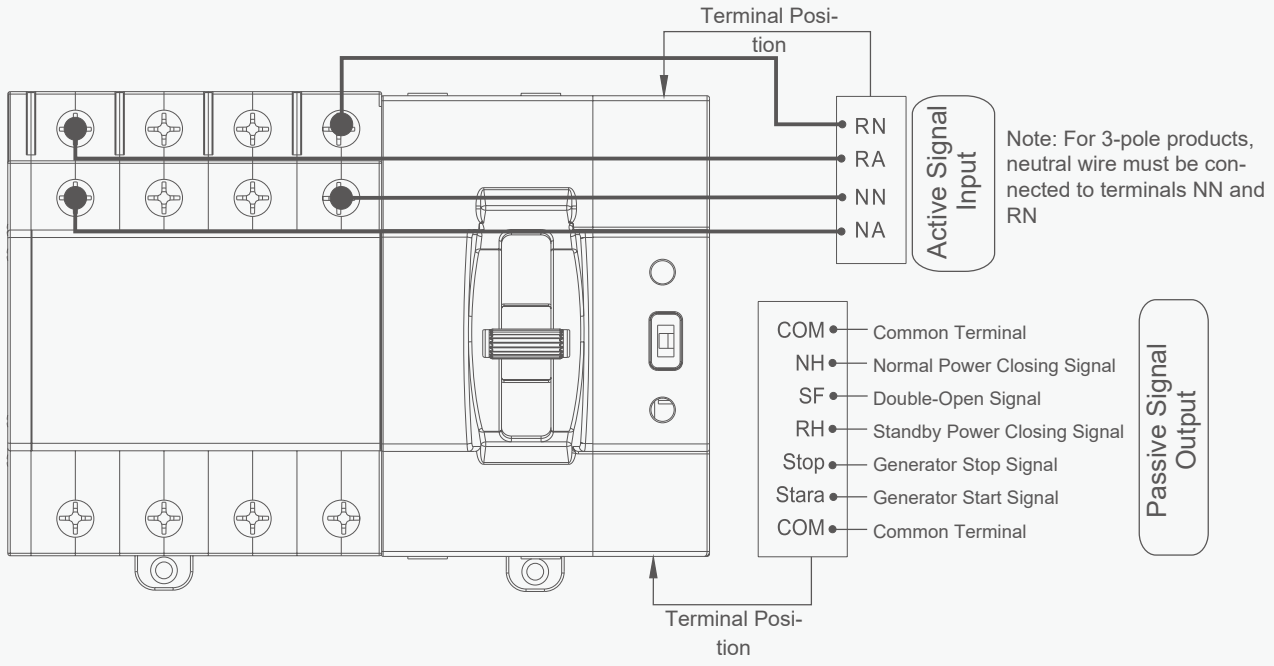

Overall and mounting dimensions(mm)

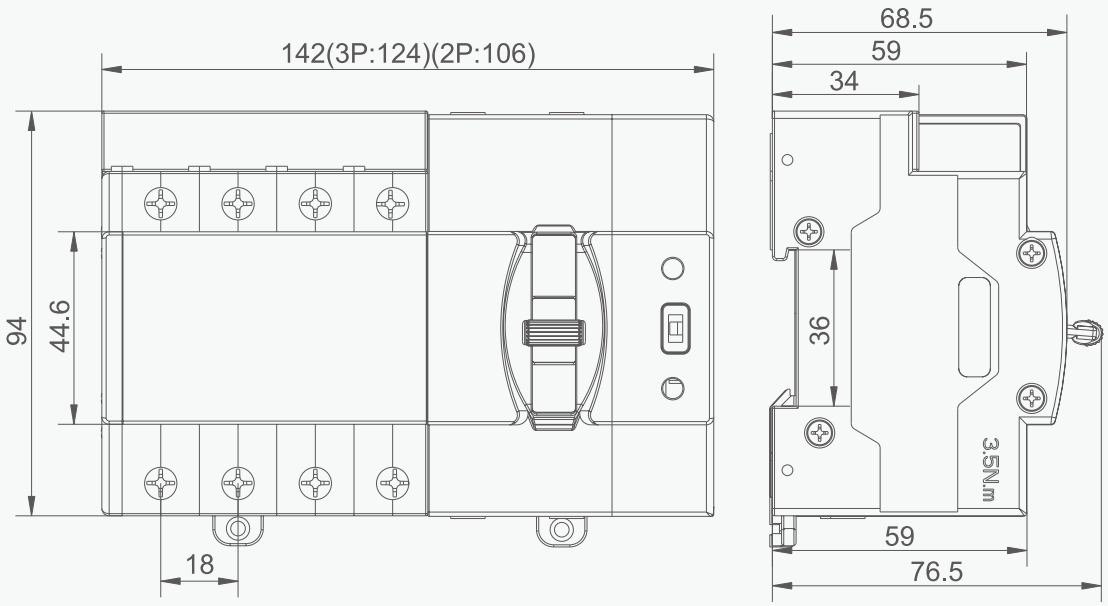

YCHGL Isolating Switch







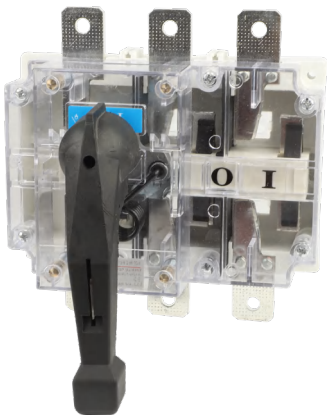

General

AC 50Hz, rated voltage 660V, rated current 3200A. It is used for making and breaking circuit not frequently.

Standard: IEC60947-3

Type designation

YC HGL □ - □ A /□ J K □ B H

- H — Operated back of the cabinet, don't note if no necessary.
- B — Connected wire back of the plate, don't note if connected wire front of plate.
- □ — The code of auxiliary contact function (see table), don't note if no necessary.
- K — Direct observation of the contact window, don't note if no necessary.
- J — Operate outside of cabinet, don't note if operate inside of cabinet.
- □ — Pole No. 3 poles 4 poles (3 poles + switch the neutral pole)
- A — Rated current
- □ — C side operates the load isolation switch; Z1 transfer load isolation switch; B Transparent shell
- HGL — Isolating switch
- YC — Company code

One NO and one NC	F11	NO+NC
Two NO and Two NC	F22	2NO+2NC

Example for lectotype: Rated current 630A,include neutral pole transferring load isolation switch, YCHGLZ1-630A/4J for operating outside of cabinet.

Operating conditions

1. YCHGL load-isolation switch can operate under the following conditions;
2. Altitude not more than 2000m;
3. The range of ambient temperature is from -5°C to 40°C;
4. Relative humidity not more than 95%;
5. The environment without any explosive medium.
6. The environment without any rain or snow attacking.

   If the product is expected to be used in the environment where temperature is over +40°C or below -5°C, users shall tell it to the manufacturer.

YCHGL Isolating Switch

Technical data

Table 1

Item			Date							
Conventional thermal current (A)			63A		100A		160A		250A	
Rated current In (A)			40	63	80	100	125	160	200	250
Rated insulation voltage Ui (V) (installation type IV)			690	690	690	690	690	690	690	690
Dielectric strength (V)			5000	5000	5000	5000	5000	5000	5000	5000
Rated surge-resistant voltage Uimp kV (installed category IV)			6	6	6	6	6	6	6	6
Rated working current Ie (A)	400V	AC-21B	40	63	80	80	125	160	200	250
		AC-22B	40	63	80	80	125	160	200	250
		AC-23B	40	50	80	80	125	160	200	250
	660V	AC-21B	40	50	80	80	125	160	200	250
		AC-22B	32	32	50	50	125	160	160	160
		AC-23B	25	25	40	40	80	80	100	125
Motor power P (kW)		400V	18.5	25	40	40	63	80	100	132
		660V	22	22	33	33	75	75	90	110
Rated short-time withstand current Icw (kA Rms) 0.1s/1s			2	2	2	2	8	8	12	12
Rated breaking capability Icn (A Rms) AC23 400V			320	504	640	800	1000	1000	1600	1600
Rated making capability Icm (A Rms) AC23 400V			400	630	800	1000	1250	1600	2000	2500
Rated short-current making capability Icm (kA peak value)			2.84	2.84	2.84	2.84	13.6	13.6	17	17
Mechanical durability 400V			1700	1700	1700	1700	1400	1400	1400	1400
Electrical durability 400V			300	300	300	300	200	200	200	200
Operation moment (Nm)			1.2	1.2	1.2	1.2	6.5	6.5	10	10

Table 2

Item			Date									
Conventional thermal current (A)			400A		630A		1600A			3200A		
Rated current In (A)			315	400	500	630	1000	1250	1600	2000	2500	3200
Rated insulation voltage Ui (V) (installation type IV)			1000	1000	1000	1000	1000	1000	1000	1000	1000	1000
Dielectric strength (V)			8000	8000	8000	8000	10000	10000	10000	10000	10000	10000
Rated surge-resistant voltage Uimp kV (installed category IV)			6	6	6	6	6	6	6	6	6	6
Rated working current Ie (A)	400V	AC-21B	315	400	500	630	1000	1250	1600	2000	2500	3200
		AC-22B	315	400	500	630	1000	1250	1600	2000	2500	3200
		AC-23B	315	400	500	630						
	660V	AC-21B	315	400	400	500	1000	1000	1600	2000	2500	2500
		AC-22B	315	315	315	315	800	800	800	1000	1250	1600
		AC-23B										
Motor power P (kW)		400V	160	220	280	315	560	560	560	710	710	710
		660V	185	185	185	185	475	475	475	750	750	750
Rated short-time withstand current Icw (kA Rms) 0.1s/1s			25	25	25	25	50	50	50	50	50	50
Rated breaking capability Icn (A Rms) AC23 400V			2520	3200	4000	5040	3000	3750	4800	600	7500	9450
Rated making capability Icm (A Rms) AC23 400V			3200	4000	5000	6300	3000	3750	4800	600	7500	9450
Rated short-current making capability Icm (kA peak value)			40	40	40	40	70	70	70	105	105	105
Mechanical durability 400V			800	800	800	800	500	500	500	300	300	300
Electrical durability 400V			200	200	200	200	100	100	100	100	100	100
Operation moment (Nm)			14.5	14.5	14.5	14.5	37	37	60	60	60	60

YCHGL Isolating Switch

B

Operation mode

1. Direct operation: The handle is installed in the middle of the switch.
2. Operation outside the board: The handle is installed outside the door off distributing board.

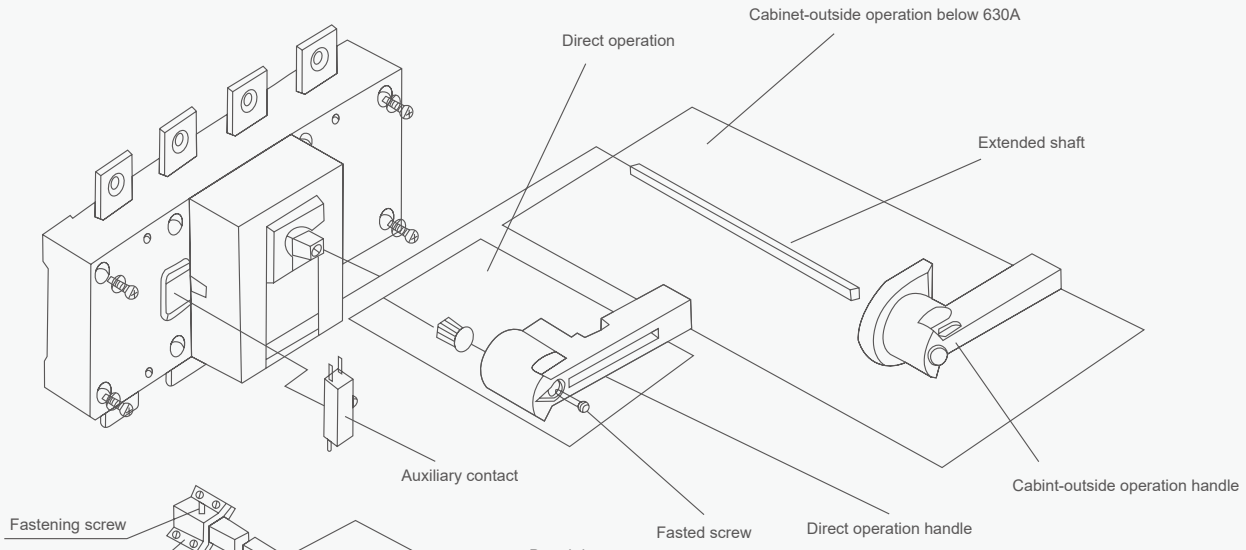

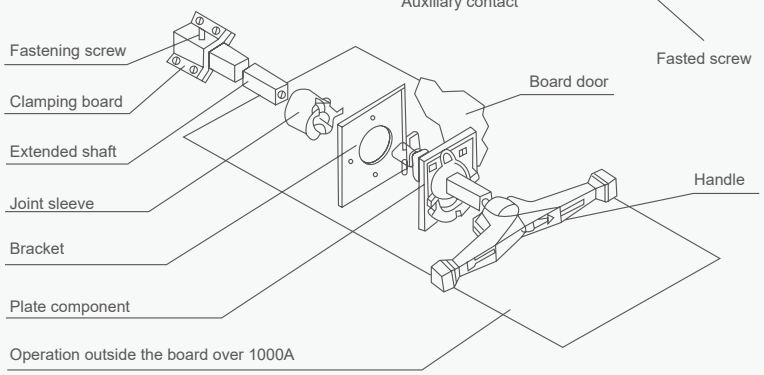

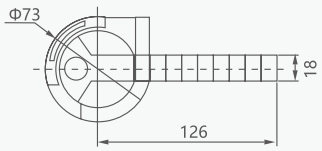

YCHGL-160~630A/3.4J

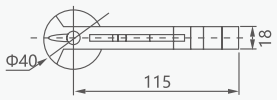

YCHGL-160A/3.4

YCHGL-160A~3200A Load isolation switch
Note: Standard length of extended shaft is
160A~630A: 300mm
1000A~3200A: 330mm

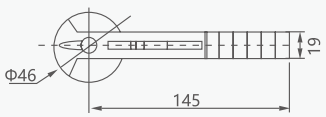

YCHGL-250A/3.4

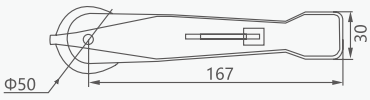

YCHGL-400~630A/3.4

YCHGL Isolating Switch

Overall and mounting dimensions(mm)

Load isolation switch side operation load isolation switch of YCHGL-63A~100A

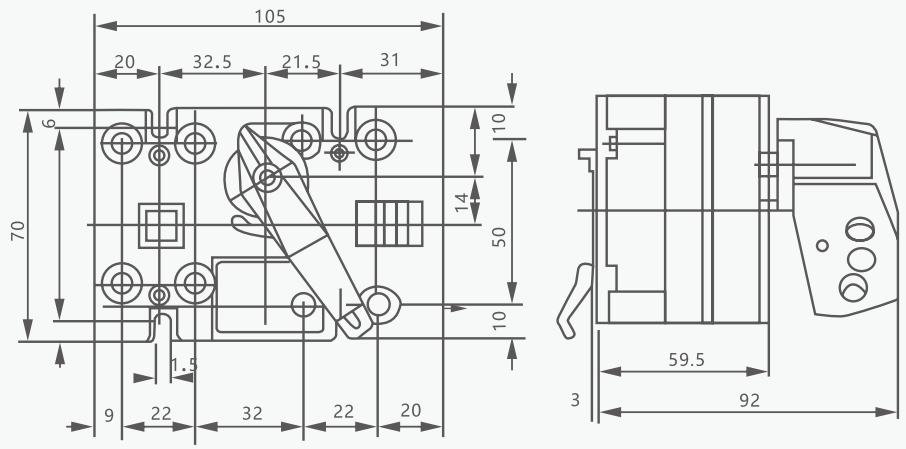

Direct operation of YCHGL 63 A

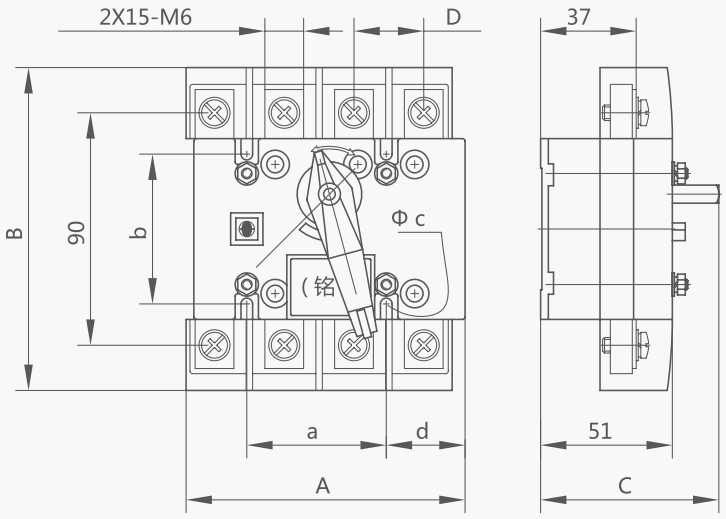

Direct operation of YCHGL 100 A

Specification		Overall Dimensions				Installation Dimensions			
		A	B	C	D	a	b	Φc	d
YCHGL-100	/3	85	125	68	27	54	58	4.5	7
	/4	109	125	68	27	54	58	4.5	30

YCHGL Isolating Switch

B

Outline and Installation Dimensions of YCHGL-160~1600A

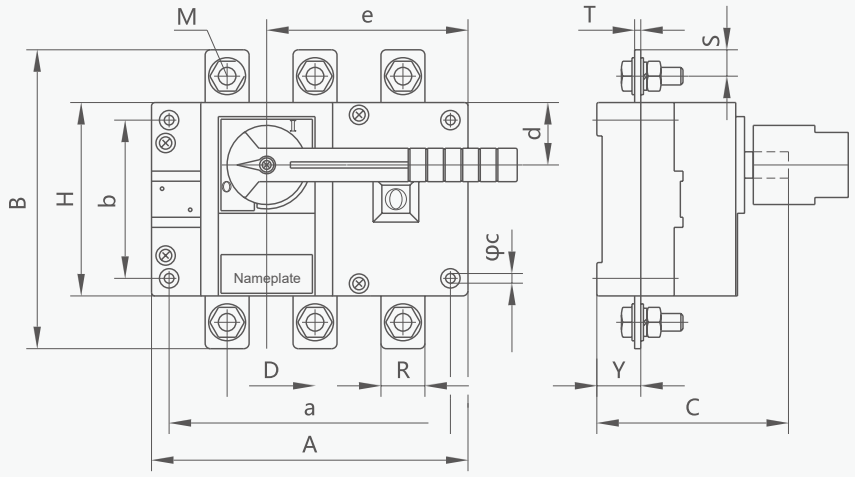

YCHGL-160~630A

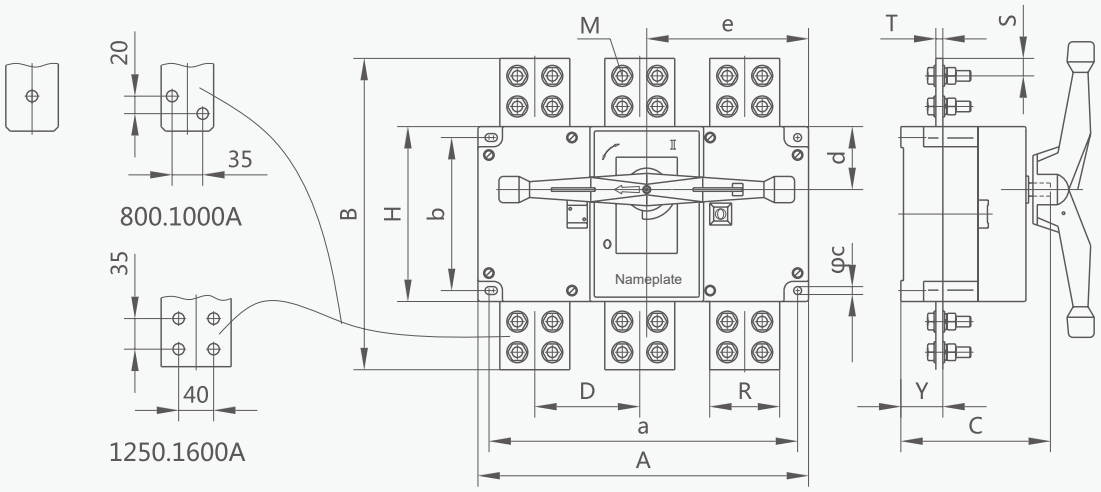

YCHGL-800~1600A

YCHGL Isolating Switch

Model		Overall Dimensions					Mounting Dimensions					Terminal Dimensions				
		A	B	C	D	H	a	b	Φc	d	e	R	S	T	Y	M
YCHGL-160	/ 3	140	135	92	36	85	120	65	5.5	27	85	20	10	3.5	25	8
	/ 4	170	135	92	36	85	150	65	5.5	27	85					
YCHGL-250	/ 3	180	170	102	50	110	160	90	5.5	35	115	25	15	3.5	25	10
	/ 4	230	170	102	50	110	210	90	5.5	35	115					
YCHGL-400	/ 3	230	240	135	65	160	210	140	7	50	145	32	17	5	37	10
	/ 4	290	240	135	65	160	270	140	7	50	145					
YCHGL-630	/ 3	230	260	135	65	160	210	140	7	50	145	40	20	6	37	12
	/ 4	290	260	135	65	160	270	140	7	50	145					
YCHGL-800	/ 3	328	312	170	120	200	303	175	9	72	160	60	20	8	48	12
YCHGL-1000	/ 3	378	312	170	120	200	353	175	9	72	185	60	20	8	48	12
	/ 4	498	312	170	120	200	473	175	9	72	249					
YCHGL-1250	/ 3	378	356	170	120	200	353	175	9	72	185	80	20	8	48	12
	/ 4	498	356	170	120	200	473	175	9	72	249					
YCHGL-1600	/ 3	378	356	170	120	200	353	175	9	72	185	80	20	10	49	12
	/ 4	498	356	170	120	200	473	175	9	72	249					

YCHGL Isolating Switch

B

Load isolation switch side operation load isolation switch of YCHGL-2000A~3200A

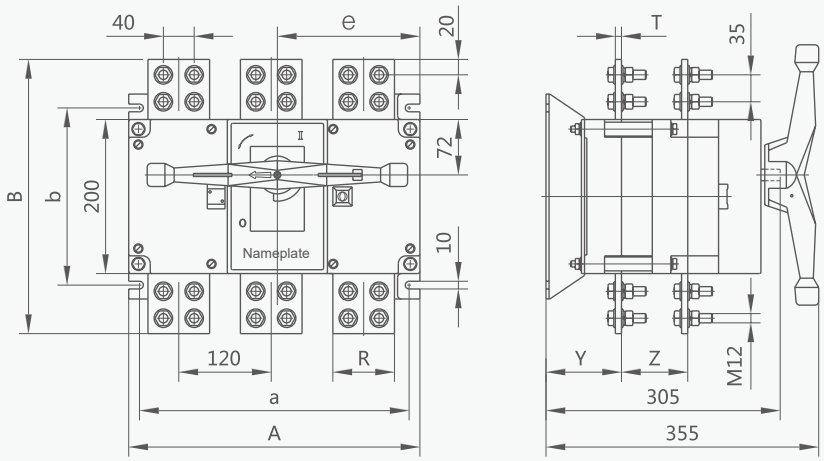

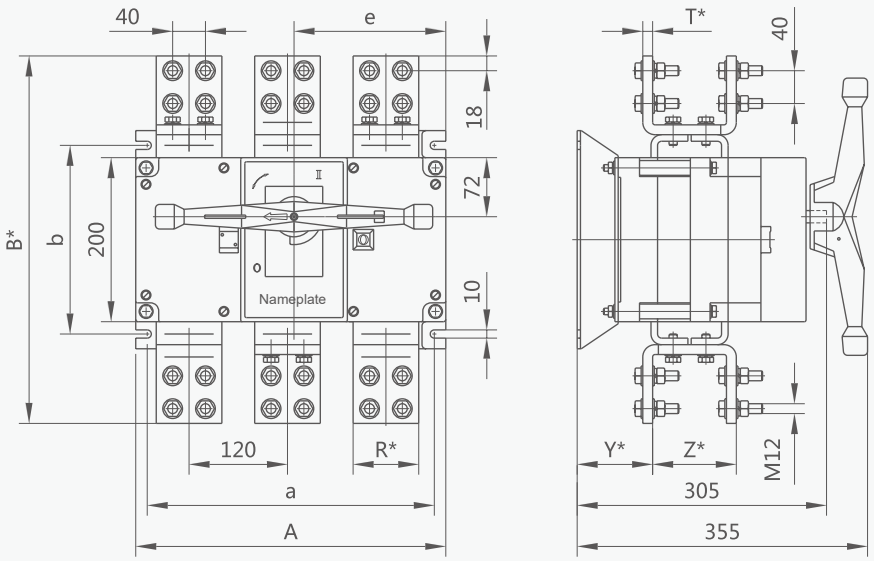

Specification	External Dimension and Installation Dimension								
	A	B/B*	a	b	e	R/R*	T/T*	Y/Y*	Z/Z*
YCHGL-2000A/3	378	306/502	347	212	185	60/60	8/10	98/85	88/115
YCHGL-2000A/4	498	306/502	470	212	249	60/60	8/10	98/85	88/115
YCHGL-2500A/3	378	306/502	347	212	185	80/80	8/12	98/85	88/115
YCHGL-2500A/4	498	306/502	470	212	249	80/80	8/12	98/85	88/115
YCHGL-3200A/3	378	306/502	347	212	185	80/100	10/15	93/83	88/120
YCHGL-3200A/4	498	306/502	470	212	249	80/100	10/15	93/83	88/120

YCHGL Isolating Switch

Outline and Installation Dimensions of YCHGLC-160~1600

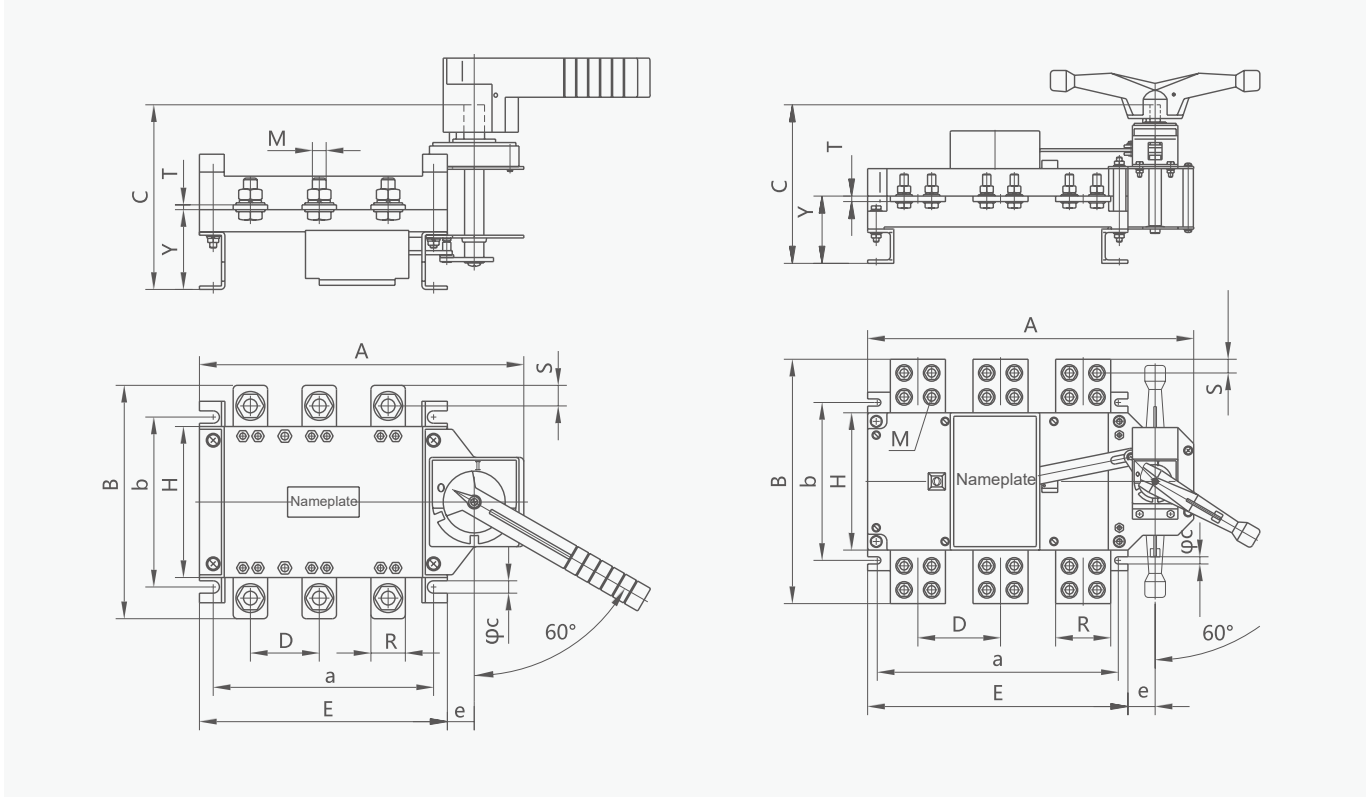

Model		Overall Dimensions						Mounting Dimensions				Terminal Dimensions				
		A	B	C	D	E	H	a	b	Φc	e	R	S	T	Y	M
YCHGLC-160	/ 3	195	135	124	36	140	85	120	95	7	20	20	10	3.5	52	8
	/ 4	225	135	124	36	170	85	150	95	7	20					
YCHGLC-250	/ 3	235	170	132	50	180	110	160	115	9	20	25	15	3.5	60	10
	/ 4	285	170	132	50	230	110	210	115	9	20					
YCHGLC-400	/ 3	300	240	164	65	230	160	210	180	11	35	32	17	5	80	10
	/ 4	360	240	164	65	290	160	270	180	11	35					
YCHGLC-630	/ 3	300	260	164	65	230	160	210	180	11	35	40	20	6	80	12
	/ 4	360	260	164	65	290	160	270	180	11	35					
YCHGLC-1000	/ 3	473	312	232	120	378	200	350	230	10	40	60	20	8	98	12
	/ 4	593	312	232	120	498	200	470	230	10	40					
YCHGLC-1250	/ 3	473	356	232	120	378	200	350	230	10	40	80	20	8	98	12
	/ 4	593	356	232	120	498	200	470	230	10	40					
YCHGLC-1600	/ 3	473	356	232	120	378	200	350	230	10	40	80	20	10	99	12
	/ 4	593	356	232	120	498	200	470	230	10	40					

YCHGLZ1 Changeover Switch

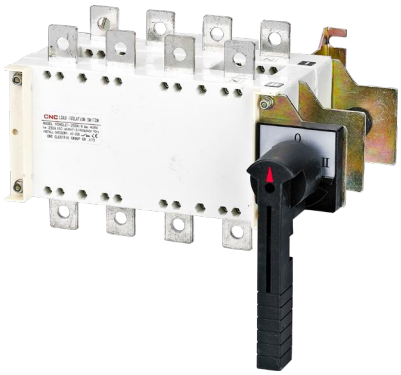

General

YCHGL series load isolation switches (hereinafter referred to as switches) are suitable for AC 50Hz, rated voltage 660V, and rated current up to 3200A. They are used for infrequent connection and disconnection of circuits and electrical isolation. This product adopts a modular design structure and has flexible and diverse combinations. Switches are widely used in distribution systems and automation systems in construction, power, petroleum, chemical, and other industries.

Standard: IEC60947-3

Features

(DMC) for the switch housing, which has high dielectric performance, protection capability, and reliable operating safety. The operating mechanism is a spring-stored energy, instantaneous release acceleration mechanism, with instant connection and disconnection dual-breakpoint contact structure. It is independent of the speed of the operating handle, greatly improving the electrical and mechanical performance.

The side-operated isolation switch adds a side-operated mechanism on the basis of the central front-operated isolation switch, which is suitable for the connection and disconnection circuit and electrical isolation on the side.

The double-throw isolation switch is composed of two isolation switches stacked up and down or arranged side by side, which is suitable for the switching of dual power supply or two load devices, as well as for safety isolation.

The switch has a beautiful and novel appearance, simple structure, and easy operation.

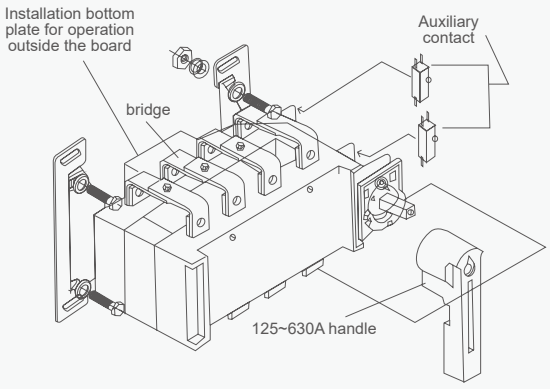

YCHGLZ1-100~3200A

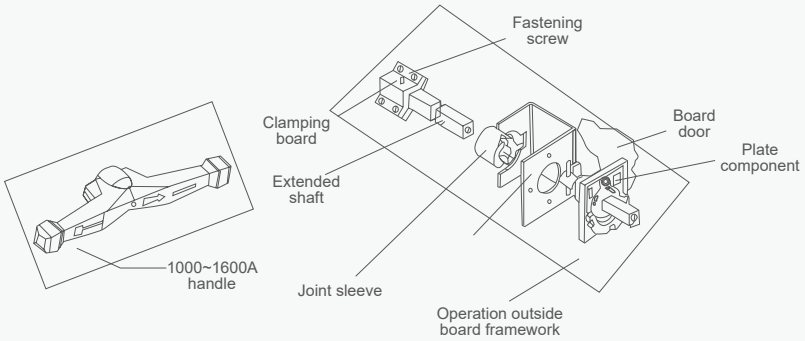

YCHGLZ1 Changeover Switch

Technical data

Item			Date														
Conventional thermal current Ith (A)			100A	160A		250A		400A		630A		1600A			3200A		
Rated current Ie			16-100A	125A	160A	200A	250A	315A	400A	500A	630A	1000A	1250A	1600A	2000A	2500A	3200A
Rated insulation voltage Ui (V)			800														
Rated impulse withstand voltage Uimp(KV)			8														
Rated working current Ie (A)	AC400V	AC-21A	100	125	160	200	250	315	400	500	630	1000	1250	1600	2000	2500	3200
		AC-22A	100	125	160	200	250	315	400	500	630	1000	1250	1600	2000	2500	3200
		AC-23A	80	125	160	200	250	315	340	425	500	800	1000	1250	1250	1250	1250
	AC690V	AC-21A	100	125	160	200	250	315	400	400	500	1000	1000	1600	2000	2500	3200
		AC-22A	80	125	125	160	160	315	315	315	315	800	800	800	1000	1000	2500
		AC-23A	63	80	80	100	125	200	200	200	200	500	500	500	800	800	800
Rated short-time withstand current Icw/1s(KA)			2	12	12	12	12	25	25	25	25	30	30	30	50	50	50
Rated making capacity AC-22A AC400V			300	375	480	600	750	945	1200	1500	1890	3000	3750	4800	600	7500	9450
Rated breaking capacity AC-22A AC400V			300	375	480	600	750	945	1200	1500	1890	3000	3750	4800	600	7500	9450
Rated short-circuit making capacity Icm (KA) Peak value			2.84	24	24	24	24	40	40	40	40	63	63	63	105	105	105
Operational performance	Mechanical life (number of cycles)		600	5000				3000				2000			1000		
	Electrical life (number of cycles)		1500	1000				600				300			100		
Operating torque			3.5	6.5	6.5	14.4	14.4	18	18	18	18	35	35	35	60	60	60

YCHGLZ1 Changeover Switch

Overall and mounting dimensions(mm)

YCHGLZ1-100~630A

YCHGLZ1-100~630A
Internal Operation

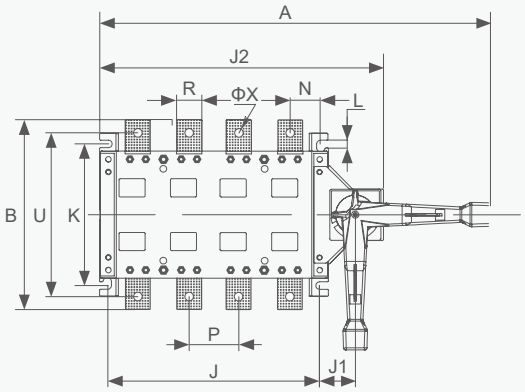

YCHGLZ1-100~630A
External Operation Side View

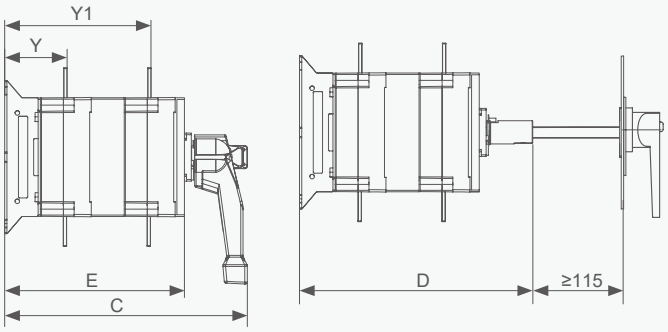

YCHGLZ1-100A
External Operation Opening Dimensions

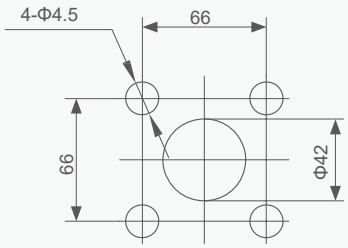

YCHGLZ1-125~3200A
External Operation Opening Dimensions

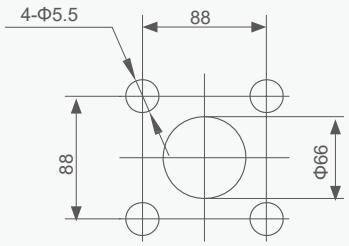

Model	Overall Dimensions															Mounting Dimensions		
In	A	B	C	D	E	J1	J2	N	P	R	S	U	X	Y	Y1	J	K	L
16A~100A/3.4	185	125	158	150	115	21	165	12.5	27	14	18	90	6.5	38	52	53	56	4
125A~160A/3	273	135	220	221	153	29	195	28	36	20	25	115	8.5	55	120	120	95	7
125A~160A/4	303	135	220	221	153	29	225	22	36	20	25	115	8.5	55	120	150	95	7
200A~250A/3	345	170	251	250	182	30	235	33	50	25	30	140	11	64	144	160	116	9
200A~250A/4	395	170	251	250	182	30	285	33	50	25	30	140	11	64	144	210	116	9
315A~400A/3	436	240	327	311	243	45	298	42	65	32	40	206	11	84	197	210	179	9.5
315A~400A/4	496	240	327	311	243	45	358	38	65	32	40	206	11	84	197	270	179	9.5
500A~630A/3	436	260	327	311	243	45	298	42	65	40	50	220	13	84	197	210	179	9.5
500A~630A/4	496	260	327	311	243	45	358	38	65	40	50	220	13	84	197	270	179	9.5

YCHGLZ1 Changeover Switch

YCHGLZ1-1000~1600A

YCHGLZ1-1000~1600A
Internal Operation

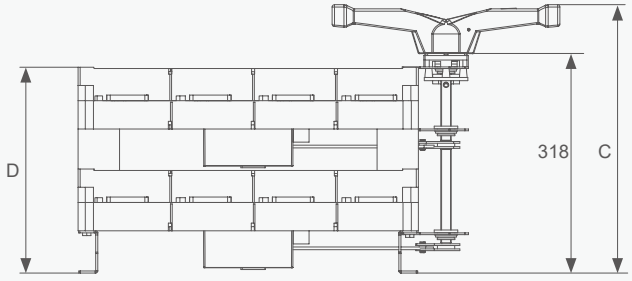

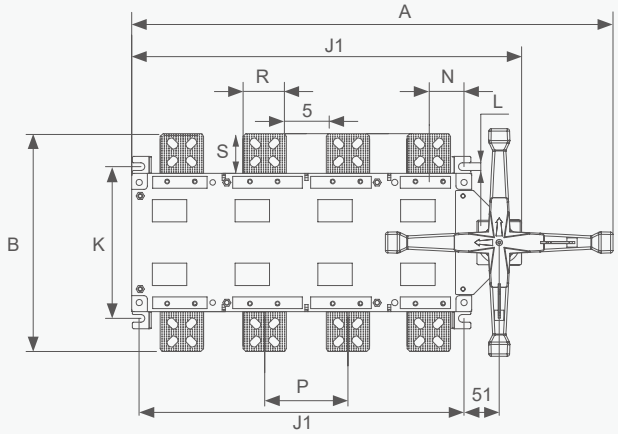

YCHGLZ1-1000~1600A
External Operation Side View

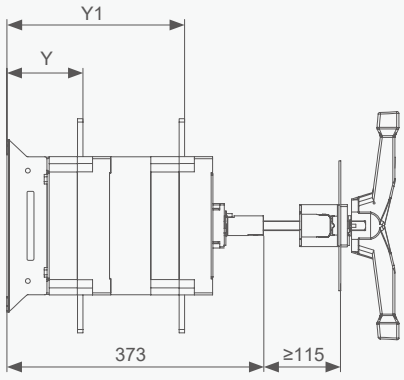

YCHGLZ1-1000~1600A
External Operation Opening Dimensions

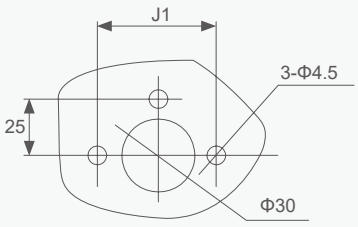

YCHGLZ1-1000A
Terminal Block

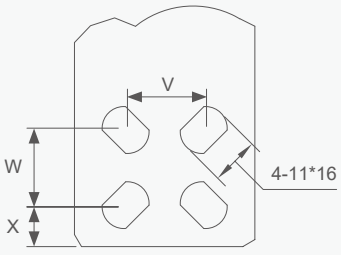

YCHGLZ1-1250~1600A
Terminal Block

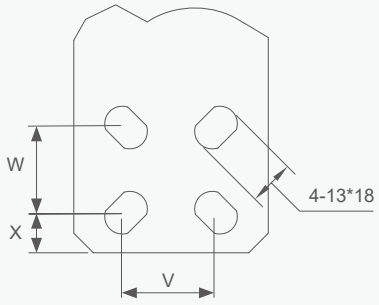

Model	Overall Dimensions															Mounting Dimensions		
In	A	B	C	D	E	J1	J2	N	P	R	S	U	W	X	Y	Y1	K	L
1000A/3	506	260	327	311	243	45	428	42	65	40	50	220	35	13.8	105	250	213	11
1000A/4	566	260	327	311	243	45	488	38	65	40	50	220	35	13.8	105	250	213	11
1250A/3	506	260	327	311	243	45	428	42	65	40	50	220	35	16	105	250	213	11
1250A/4	566	260	327	311	243	45	488	38	65	40	50	220	35	16	105	250	213	11
1600A/3	506	260	327	311	243	45	428	42	65	40	50	220	35	16	107	252	213	11
1600A/4	566	260	327	311	243	45	488	38	65	40	50	220	35	16	107	252	213	11

YCHGLZ1 Changeover Switch

YCHGLZ1-2000~3200/Z

YCHGLZ1-2000~3200/Z
Without connecting copper

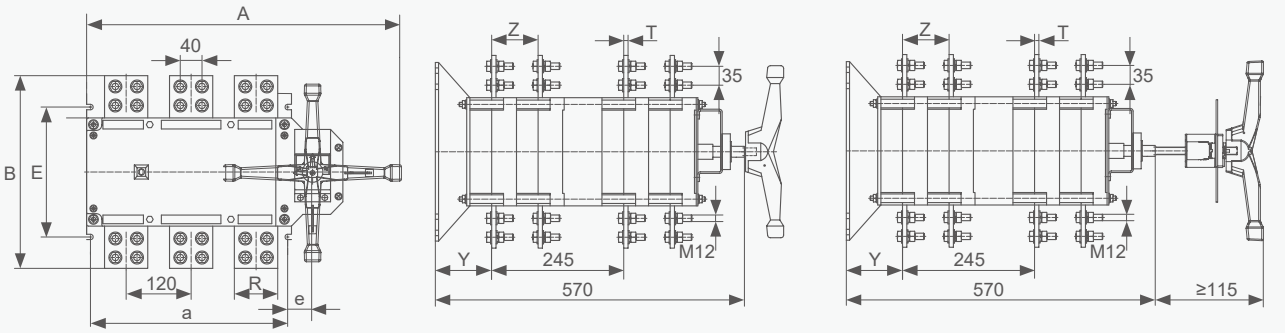

YCHGLZ1-2000~3200/Z
With connecting copper

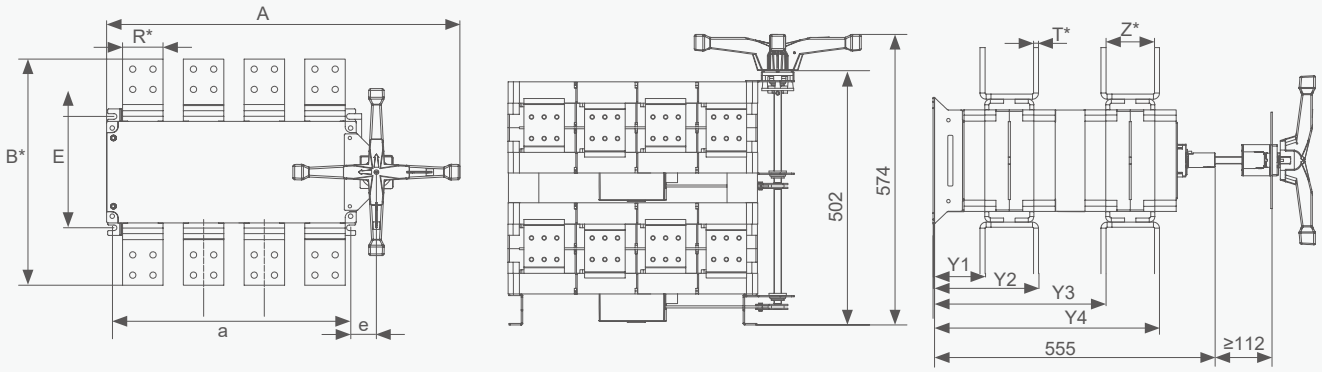

Model		Overall Dimensions					Mounting Dimensions							
		A	B/B*	E	a	e	R/R*	T/T*	Z	Y	Y1	Y2	Y3	Y4
YCHGLZ1-2000	/3Z	582	310/405	220	350	40	60/80	8/10	88	98	103	190	315	403
	/4Z	697	310/405	220	470	40								
YCHGLZ1-2500	/3Z	582	348/427	220	350	40	80/80	8/12	88	98	96	203	312	413
	/4Z	697	348/427	220	470	40								
YCHGLZ1-3200	/3Z	582	348/447	220	350	40	80/120	10/15	88	98	96	196	312	418
	/4Z	697	348/447	220	470	40								

NT Series
Low Voltage Fuse

YCHR17
Fuse Switch-Disconnector



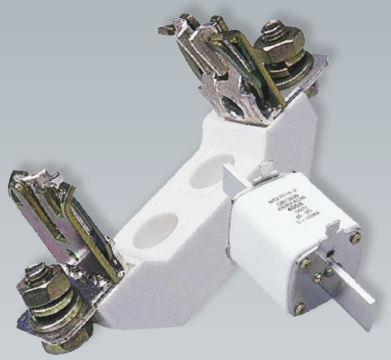



CNC
ELECTRIC

NT Low Voltage Fuse



NT00C



NT00

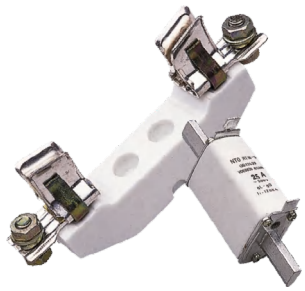

NT0

General

NT low voltage H.R.C. is featured as features light in weight, small in size, low in power loss and high in breaking capacity. This product has been widely used in overload and short circuit protection of electric installation. This product complies with IEC 60269 and all evaluation standards are at the advanced level in the world.

Technical data

Type	Fuse link				Fuse base	
	Rated current (A)	Rated voltage (V)	Rated power loss (W)	Weight (kg)	Rated current	Weight (kg)
NT00C	2	500,690	0.41	0.15	160	0.2
	4		0.62			
	6		0.81			
	10		1.08			
	16		1.60			
	20		1.81			
	25		2.31			
	32		3.07			
	36		3.17			
	40		4.05			
	50		4.25			
	63		4.70			
	80		5.7			
	100		7			
NT00	4	500,600	0.67	0.15	160	0.2
	6		0.89			
	10		1.14			
	16		1.65			
	20		1.94			
	25		2.50			
	32		3.32			
	36		3.56			
	40		4.30			
	50		4.5			
	63		4.6			
	80		6			
	100		7.3			
	125	500	7.6			
	160		9.6			
NT0	6	500,600	1.03	0.2	160	0.32
	10		1.42			
	16		2.45			
	20		2.36			
	25		2.7			
	32		3.74			
	35		4.3			
	40		4.7			
	50		5.5			
	63		6.9			
	80		7.6			
	100		8.9			
	125	500	10.1			
	160		15.2			

NT Low Voltage Fuse

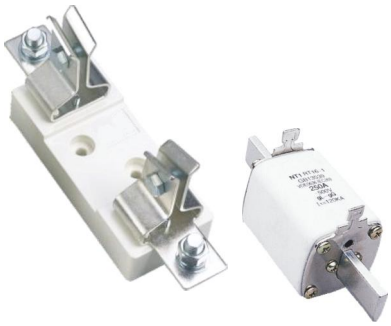

NT1



NT2



NT3



NT4

Technical data

Type	Fuse link				Fuse base	
	Rated current (A)	Rated voltage (V)	Rated power loss (W)	Weight (kg)	Rated current	Weight (kg)
NT1	80	500,690	6.2	0.36	250	0.8
	100		7.5			
	125		10.2			
	160		13			
	200		15.2			
	224	500	16.8			
	250		18.3			
NT2	125	600	9	0.65	400	1.2
	160		11.5			
	200		15			
	224		16.6			
	250		18.4			
	300		21			
	315		19.2			
	355		24.5			
	400		26			
NT3	315	500,600	21.7	0.85	630	1.5
	355		22.7			
	400		26.8			
	425		28.9			
	500	500	32			
	630		40.3			
NT4	800	380	62	1.95	1000	3.45
	1000		75			

YCHR17 Fuse-switch Disconnector



General

YCHR17 series fuse-switch disconnector is a new product developed by our company. Rated insulation voltage up to 800V, rated operational voltage up to 690V, rated operating current up to 630A, rated frequency 50Hz, in the distribution circuit and motor circuit which has high short-circuit current as the power switch, isolating switch, emergency switch as well as circuit protection, but normally it is not used to make and break a single motor directly.

Standard: IEC/EN 60947-3.

Type designation

YC HR 17 - □ / □ □

- "1 "indicates auxiliary switch, 0" indicates no auxiliary switch
- Number of poles
- Agreed heating current (A)
- Design sequence number
- Fuse-switch disconnector
- Company code

Technical data

Type			40	63/100	160	250	400	630
Rated voltage (Ue)			660V a.c 380V a.c	660V a.c 380V a.c	660V a.c 380V a.c	660V a.c 380V a.c	660V a.c 380V a.c	660V a.c 380V a.c
Rated insulation voltage(Ui)			800V	800V	800V	800V	800V	800V
Rated impulse voltage strength (Uimp)			6kV	6kV	6kV	6kV	6kV	6kV
Rated current (Ie)		AC-21B	40A	63/100A	160A	250A	400A	630A
	AC 380V	AC-22B	40A	63/100A	160A	250A	400A	630A
		AC-23B	-	-	160A	250A	400A	630A
	AC 660V	AC-21B	-	-	160A	250A	400A	630A
		AC-22B	-	-	100A	160A	315A	425A
Rated short-circuit current			20kA	20kA	50kA	50kA	50kA	50kA
			(peak 105kA)	(peak 105kA)	(peak 105kA)	(peak 105kA)	(peak 105kA)	(peak 105kA)

YCHR17 Fuse-switch Disconnector



Overall and mounting dimensions(mm)

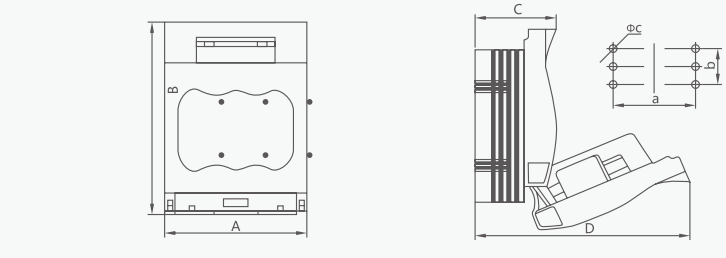

Technical data

Model	Poles	Overall (mm)				Installation (mm)		
		A	B	C	D	a	b	Φc
YCHR17-40	3P	76	116	76	150	42	/	Φ6
YCHR17-63	3P	105	116	76	150	62	/	Φ6
YCHR17-100	3P	105	116	76	150	62	25	Φ6
YCHR17-160	224	106	200	83	205	66	25	Φ7
	250	138	200	83	205	100	25	Φ7
YCHR17-250	3P	185	247	110	295	114	50	Φ11
	4P	242	247	110	295	172	50	Φ11
YCHR17-400	3P	210	290	125	340	130	50	Φ11
	4P	276	290	125	340	195	50	Φ11
YCHR17-630	3P	256	300	145	360	162	50	Φ11
	4P	340	300	145	360	243	50	Φ11

Matching relationship between switch and fuse

Conventional heating current Ith	Matching fuse size	Fuse rated current(A)
40A	Rt14	2, 4, 6, 8, 10, 12, 16, 20, 25, 32, 40
63A/100A	RT14	10, 12, 16, 20, 25, 32, 40, 50, 63
160A	NT100	10, 16, 25, 32, 40, 50, 63, 80, 100, 125, 160
250A	NT1	80, 100, 125, 160, 200, 225, 250
400A	NT2	125, 160, 200, 225, 250, 300, 315, 355, 400
630A	NT3	315, 355, 400, 425, 500, 630

YCH5 Vertical Fuse-switch Disconnector



YCH5L



YCH5 With operating mechanism



YCH5J Without operating mechanism

General

YCH5 series vertical fuse-switch disconnector is applicable in the circuit of rated voltage AC690V and below, rated current AC 160A-630A, rated frequency of 50Hz. YCH5 series are infrequently manually operated multipolar fuse combination switches.

They disconnect or turn off loads and provide secure isolation and protection against over-current for any voltage electrical circuit.

Standard: IEC 60947-3.

Type designation

YC H5 □ □

- □ (last): L: Three phases breaking and making simultaneously; S: Independent operation phase to phase; J: Independent operation phase to phase without operating mechanism;
- □: Rated current
- H5: Vertical Fuse-switch Disconnector
- YC: CNC

Features

- Structure: The switch consist of underpan, base, cover, handle and shield.
- NT series fuse link is installed in the cover to act as knife of active contact.
- The handle moves fan-shaped with the underpan as the axis to allow the cover and fuse make and break together, which is designed with enough space and remarkable disconnection point that meets the requirements of the isolation switch.
- It is convenient to dismount the base and underpan for mounting the base to the busbar safely and reliably.
- There is the arc extinguisher on the underpan, which ensures breaking capacity of the switch.

YCH5 Vertical Fuse-switch Disconnector

Technical data

Conventional thermal current(A)	Rated insulation voltage(V)	Rated current(A)												Specification of a ssociated fuse		
		400V	AC20	400V	AC21	400V	AC22	690V	AC20	690V	Ac21	690V	AC22	Model	400V Rated current of fuse (Breaking capacity) A	690V Rated current of fuse (Breaking capacity) A
160	800	160		160		160		160		100		100		00	/	Φ6
250		250		250		250		250		200		200		1	25	Φ6
400		400		400		400		400		315		315		2	25	Φ7
630		630		630		630		630		425		315		3	50	Φ11

Overall and mounting dimensions(mm)

Model	Bus bar(mm)	Fuse link	Note
YCH5-160	185	NT00	Independent operation phase to phase
YCH5-160L	185	NT00	Three phases breaking and making simultaneously

YCH5-160

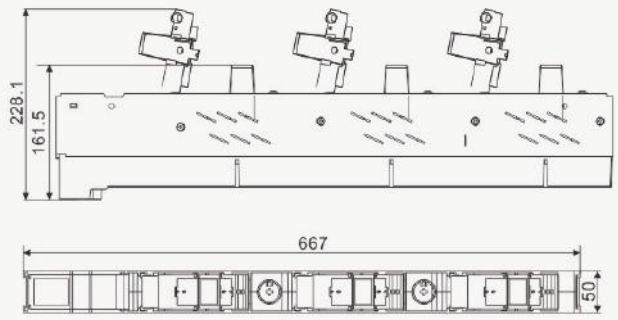

YCH5-160L

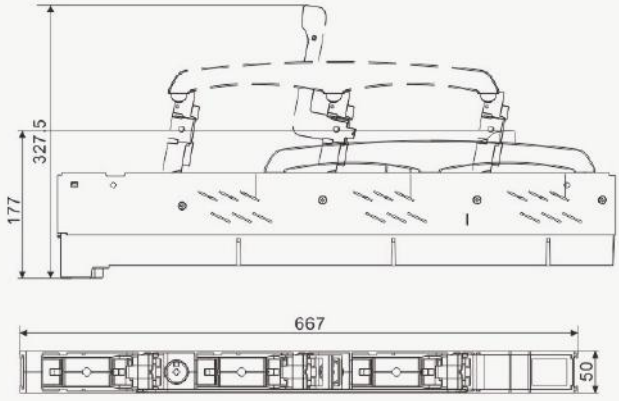

YCH5 Vertical Fuse-switch Disconnector

The base of YCH5-400-630

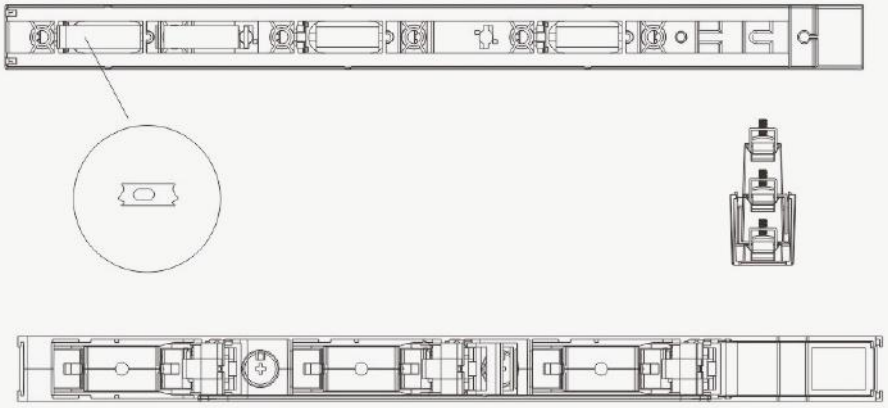

Model	Bus bar(mm)	Fuse link	Note
YCH5-250L	185	NH1	Three phases breaking and making simultaneously
YCH5-400L	185	NH2	
YCH5-630L	185	NH3	
YCH5-250	185	NH1	Independent operation phase to phase
YCH5-400	185	NH2	
YCH5-630	185	NH3	

YCH5-250-630/L

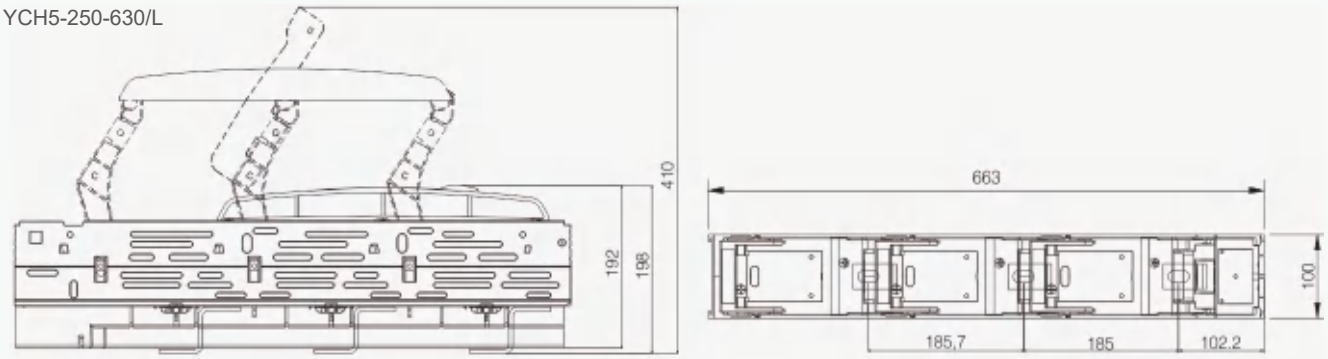

YCH5-250-630

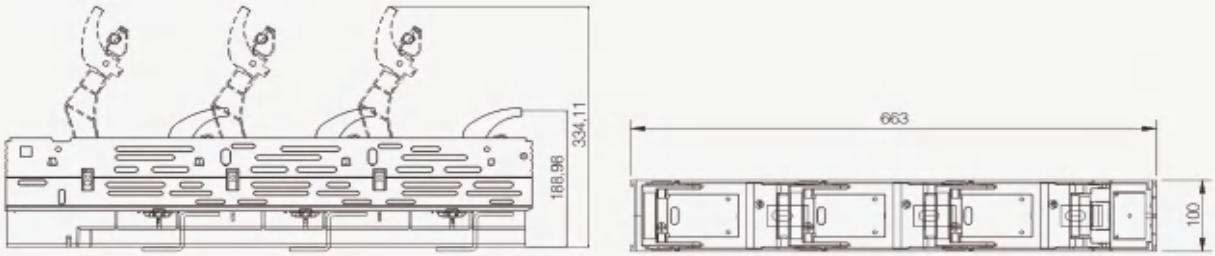

YCH5 Vertical Fuse-switch Disconnector

The base of YCH5-400-630

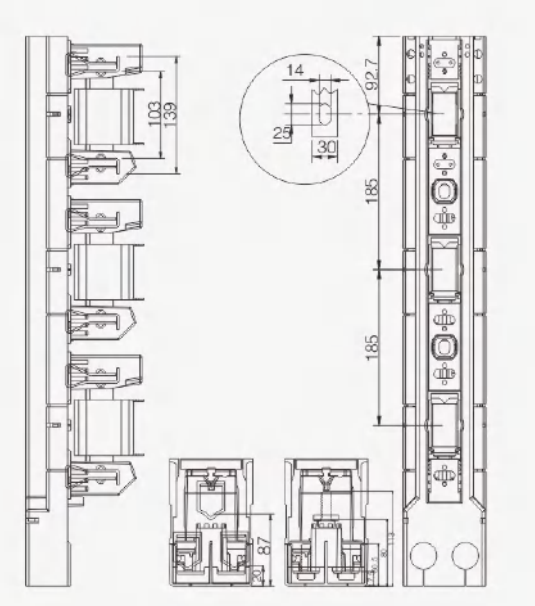

The base of YCH5-250

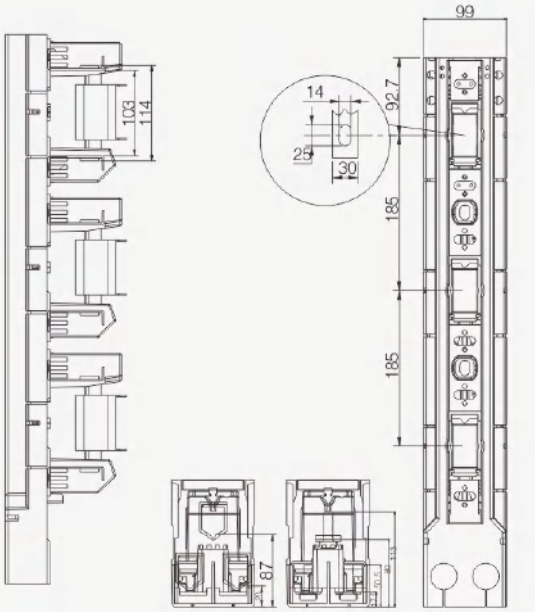

ISBox-Z1 Series Isolation Switch Box



General

ISBox-Z1 series conversion isolation switch box adopts YCHGLZ1 conversion isolation switch, with standard configuration of two in and one out, installed with a bottom plate, and operated outside the cabinet.

Optional features (please note when placing an order)

- Top in and bottom out (default), top in and top out, bottom in and bottom out.
- Two in and one out (default), one in and two out, two in and two out.
- With mounting plate(default), without mounting plate.
  Please specify other special requirements.

Overall and mounting dimensions(mm)

63~100A

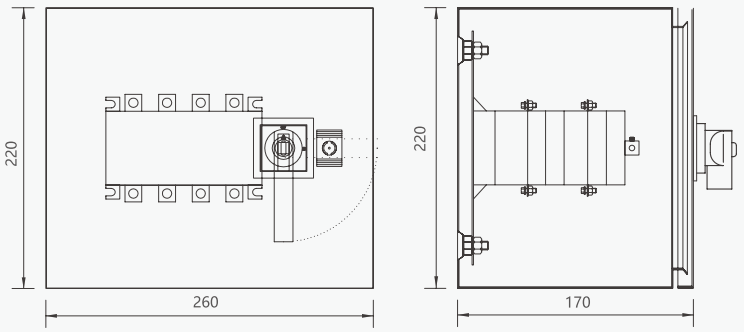

Current: 63-100A BOX(Body 1.0mm, Mounting plate 1.5mm)

Ordering model	Switch model	Box size(H*W*D)
ISBox-Z1-63/3J	YCHGLZ1-63/3J	220*260*170
ISBox-Z1-63/4J	YCHGLZ1-63/4J	
ISBox-Z1-100/3J	YCHGLZ1-100/3J	
ISBox-Z1-100/4J	YCHGLZ1-100/4J	

125~160A

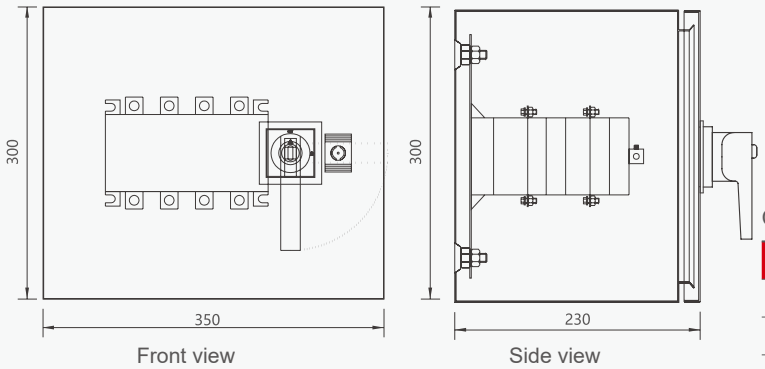

Current: 125-160A BOX(Body 1.0mm, Mounting plate 1.5mm)

Ordering model	Switch model	Box size(H*W*D)
ISBox-Z1-125/3J	YCHGLZ1-125/3J	300*350*230
ISBox-Z1-125/4J	YCHGLZ1-125/4J	
ISBox-Z1-160/3J	YCHGLZ1-160/3J	
ISBox-Z1-160/4J	YCHGLZ1-160/4J	

ISBox-Z1 Series Isolation Switch Box

200~250A

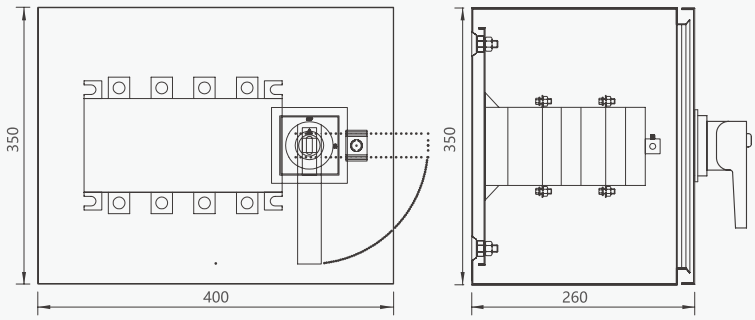

Front view　　Side view

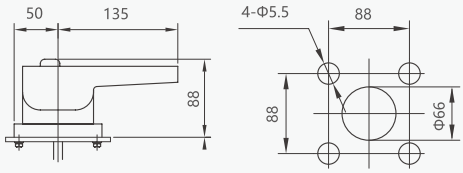

Current: 200-250A BOX(Body 1.0mm, Mounting plate 1.5mm)

Ordering model	Switch model	Box size(H*W*D)
ISBox-Z1-200/3J	YCHGLZ1-200/3J	350*400*260
ISBox-Z1-200/4J	YCHGLZ1-200/4J	
ISBox-Z1-250/3J	YCHGLZ1-250/3J	
ISBox-Z1-250/4J	YCHGLZ1-250/4J	

315~630A

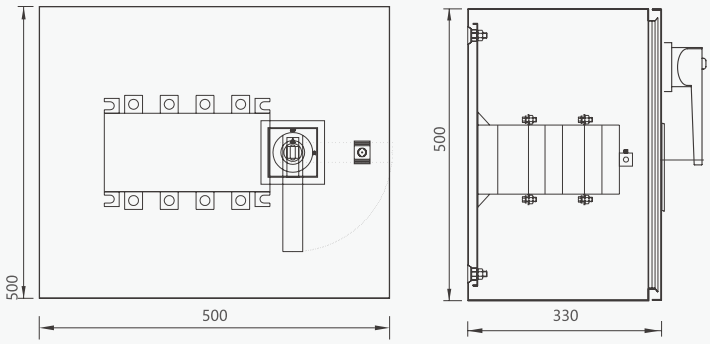

Front view　　Side view

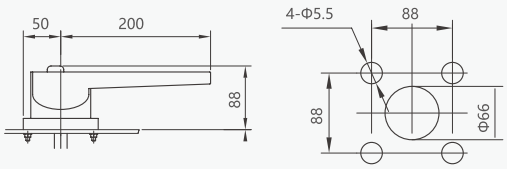

Current: 315-630A BOX(Body 1.0mm, Mounting plate 1.5mm)

Ordering model	Switch model	Box size(H*W*D)
ISBox-Z1-315/3J	YCHGLZ1-315/3J	500*500*330
ISBox-Z1-315/4J	YCHGLZ1-315/4J	
ISBox-Z1-400/3J	YCHGLZ1-400/3J	
ISBox-Z1-400/4J	YCHGLZ1-400/4J	
ISBox-Z1-630/3J	YCHGLZ1-630/3J	
ISBox-Z1-630/4J	YCHGLZ1-630/4J	

ISBox-Z1 Series Isolation Switch Box

800~1600A

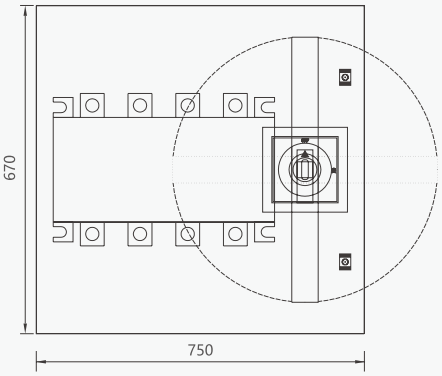

Front view

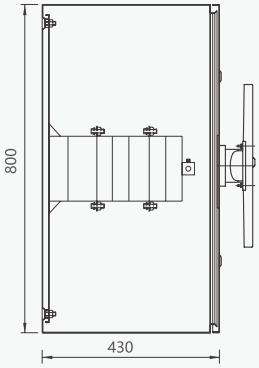

Side view

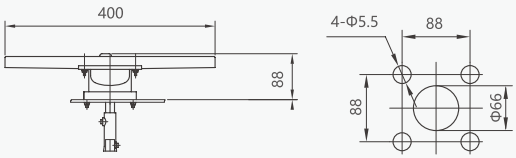

Current: 800-1600A BOX(Body 1.2mm, Mounting plate 2.0mm)

Ordering model	Switch model	Box size(H*W*D)
ISBox-Z1-800/3J	YCHGLZ1-800/3J	670*750*430
ISBox-Z1-800/4J	YCHGLZ1-800/4J	
ISBox-Z1-1000/3J	YCHGLZ1-1000/3J	
ISBox-Z1-1000/4J	YCHGLZ1-1000/4J	
ISBox-Z1-1250/3J	YCHGLZ1-1250/3J	
ISBox-Z1-1250/4J	YCHGLZ1-1250/4J	
ISBox-Z1-1600/3J	YCHGLZ1-1600/3J	
ISBox-Z1-1600/4J	YCHGLZ1-1600/4J	

2000~3200A

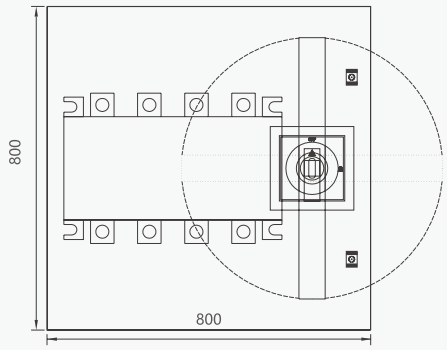

Front view

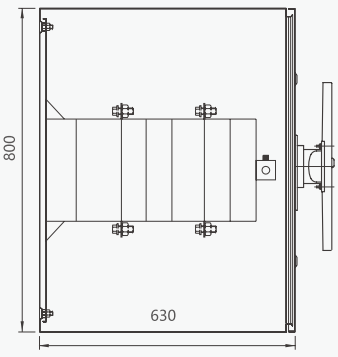

Side view

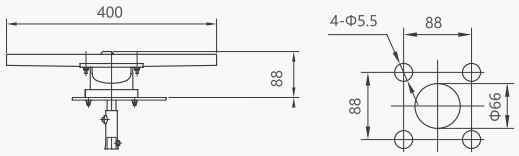

Current: 2000-3200A BOX(Body 1.2mm, Mounting plate 2.0mm)

Ordering model	Switch model	Box size(H*W*D)
ISBox-Z1-2000/3J	YCHGLZ1-2000/3J	800*800*630
ISBox-Z1-2000/4J	YCHGLZ1-2000/4J	
ISBox-Z1-2500/3J	YCHGLZ1-2500/3J	
ISBox-Z1-2500/4J	YCHGLZ1-2500/4J	
ISBox-Z1-3200/3J	YCHGLZ1-3200/3J	
ISBox-Z1-3200/4J	YCHGLZ1-3200/4J	